(12) INTERNATIONAL APPLICATION PUBLISHED UNDER THE PATENT COOPERATION TREATY (PCT)

(19) World Intellectual Property Organization
International Bureau

(43) International Publication Date
10 November 2016 (10.11.2016)

WIPO | PCT

(10) International Publication Number
WO 2016/177378 A1

(51) International Patent Classification:
B30B 11/26 (2006.01) *B30B 11/06* (2006.01)
B30B 9/28 (2006.01)

(21) International Application Number:
PCT/DK2016/050115

(22) International Filing Date:
4 May 2016 (04.05.2016)

(25) Filing Language: English

(26) Publication Language: English

(30) Priority Data:
PA 2015 70267 7 May 2015 (07.05.2015) DK

(71) Applicant: **C.F. NIELSEN A/S** [DK/DK]; Solbjergvej 19, 9574 Bælum (DK).

(72) Inventor: **LARSEN, Henning Michael**; Volsted Skolevej 105, 9530 Støvring (DK).

(74) Agent: **PATRADE A/S**; Fredens Torv 3A, 8000 Aarhus C (DK).

(81) Designated States *(unless otherwise indicated, for every kind of national protection available)*: AE, AG, AL, AM, AO, AT, AU, AZ, BA, BB, BG, BH, BN, BR, BW, BY, BZ, CA, CH, CL, CN, CO, CR, CU, CZ, DE, DK, DM, DO, DZ, EC, EE, EG, ES, FI, GB, GD, GE, GH, GM, GT, HN, HR, HU, ID, IL, IN, IR, IS, JP, KE, KG, KN, KP, KR, KZ, LA, LC, LK, LR, LS, LU, LY, MA, MD, ME, MG, MK, MN, MW, MX, MY, MZ, NA, NG, NI, NO, NZ, OM, PA, PE, PG, PH, PL, PT, QA, RO, RS, RU, RW, SA, SC, SD, SE, SG, SK, SL, SM, ST, SV, SY, TH, TJ, TM, TN, TR, TT, TZ, UA, UG, US, UZ, VC, VN, ZA, ZM, ZW.

(84) Designated States *(unless otherwise indicated, for every kind of regional protection available)*: ARIPO (BW, GH, GM, KE, LR, LS, MW, MZ, NA, RW, SD, SL, ST, SZ, TZ, UG, ZM, ZW), Eurasian (AM, AZ, BY, KG, KZ, RU, TJ, TM), European (AL, AT, BE, BG, CH, CY, CZ, DE, DK, EE, ES, FI, FR, GB, GR, HR, HU, IE, IS, IT, LT, LU, LV, MC, MK, MT, NL, NO, PL, PT, RO, RS, SE, SI, SK, SM, TR), OAPI (BF, BJ, CF, CG, CI, CM, GA, GN, GQ, GW, KM, ML, MR, NE, SN, TD, TG).

Published:

— *with international search report (Art. 21(3))*

(54) Title: APPARATUS FOR PRODUCTION OF COMPRESSED BIOMASS MEMBERS AND METHOD FOR START-UP OF THE APPARATUS

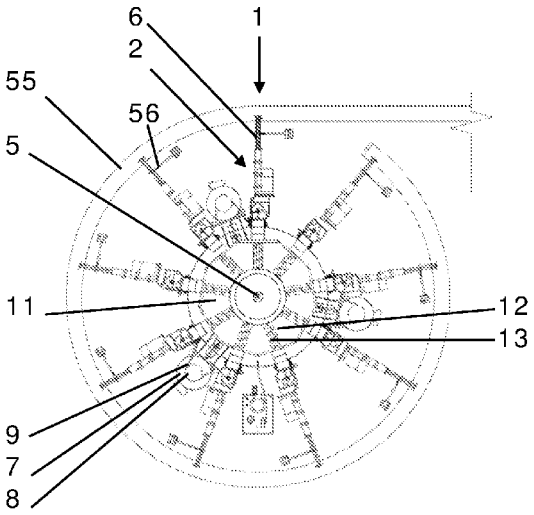

FIG. 1a

(57) Abstract: Apparatus for production of compressed biomass members and method for start- up of the apparatus The apparatus (1) comprises a plurality of press units (2), each press unit (2) comprising a stationary matrix (19) with a press channel (6) and a linearly reciprocating piston (20) arranged coaxially with the press channel (6) for pushing biomass into the press channel (6) and for compression of the biomass in the press channel (6) during forward piston motion. The press units (2) are arranged in a horizontal plane (4) in a star configuration around a centre (5) with the piston motion being radial from the centre. For start-up conditions, the forward end point of the reciprocating motion of the pistons (20) is adjusted rearwards before running of the apparatus and gradually returned for- ward, only once the apparatus is running.

WO 2016/177378 A1

Apparatus for production of compressed biomass members and method for start-up of the apparatus

FIELD OF THE INVENTION

The present invention relates to an apparatus for producing compressed biomass members. The apparatus comprises a plurality of press units in which a reciprocating piston compresses biomass in a matrix. The press units are arranged in a horizontal plane in a star pattern. The present invention also relates to a start-up method for the apparatus.

BACKGROUND OF THE INVENTION

Increased demand of sustainable fuel sources has put pressure on facilities using oil and coal for heat and electricity production. One of the available fuel sources is biomass, including material containing cellulose and lignin. In order to increase competiveness of various forms of biomass, it is of high interest to increase the energy efficacy of the biomass, for example by torrefaction, which includes a partial burning process with reduced or no oxygen availability. Torrefied material is typically cut or ground into small pieces and compressed during an extrusion process. The pellets or briquettes produced by extrusion have mechanical properties that are similar to coal, why the material is useful for existing plants that are designed for burning coal.

In order to produce sufficient amounts of biofuel, extruders are needed with high capacity to fulfil the demands while at the same time having relatively low energy consumption, as the latter influences the final price of the pellets. All these factors have to be considered for a competitive product. For this reason, efforts are ongoing to improve the technology of presses and extruders in the direction of high production capacity at low production costs.

Extruders with compressing pistons that compress biomass and push the material into the extruder are known in the art. German patent DE102009015210 by Perdekamp discloses a press for production of pellets containing material based on cellulose or

lignin. An eccentric drive reciprocates a set of three pistons into corresponding channels in a matrix such that the material is compressed into pellets by each thrust of the pistons, and the pellets are released from the matrix at the opposite end of the channels. By spindles, the distance of the matrix relatively to the pistons can be adjusted for regulating the distance by which the pistons enter the channels. This function is used to vary the pressure force on the pellets. In order to increase the speed and capacity of the press, a plurality of press units are arranged in a star configuration. A circular plate is provided at the centre of the star with an eccentric connector that is connected to each piston. Rotation of the circular plate causes the eccentric connector to perform a circular motion which drives the pistons one after the other.

The star principle of the various press units with the movable matrix implies a complicated and expensive setup, because each press unit comprises several spindles for driving the corresponding matrix. In addition, the spindle arrangement requires lateral space, which is disadvantageous when a high spatial density of press units is desired for high production capacity. It would be desirable to simplify the system in order to reduce production and maintenance costs as well as risk for breakdown.

International patent application WO97/16305 discloses a press unit with eight pistons arranged in a star pattern and fastened to a rotating disc. Eccentric rotation of the disc presses sequentially one after the other of the pistons into a consecutive channels. Alternatively, an oval plate presses onto the back end of the pistons sequentially, thus always pressing two opposite pistons into a channel.

DESCRIPTION / SUMMARY OF THE INVENTION

It is therefore the objective of the invention to provide a general improvement in the art. It is a specific objective to provide a biomass press and extruder that has a simple, reliable and robust construction. This objective is achieved with an apparatus for producing compressed biomass members as described in the following.

The apparatus comprises a plurality of press units, for example three, six, or nine, in a stationary frame. Each press unit comprises a matrix with a press channel and a linearly reciprocating piston arranged coaxially with the press channel for pushing biomass into the press channel and for compressing the biomass in the press channel during forward piston motion. For example, the piston is arranged for a reciprocating forward and backward piston motion into and out of the press channel, although this is not necessary, and it may suffice that the front end of the piston approaches the press channel in close proximity without entering the press channel. The press units are arranged in a horizontal plane in a star pattern around a centre with the piston motion being radial from the centre. In contrast to the aforementioned German patent DE102009015210 by Perdekamp, the matrix is arranged stationary. Such stationary matrices save space for the press units due to a simpler setup, which allows a higher number of press units being arranged in relatively tight space. This is an advantage for construction of robust and compact machines with high production capacities. The avoidance of spindle drives for movable matrices also reduces the risk for breakdown.

The apparatus comprises a driving member for driving the pistons. The driving member is configured for a first mode of motion, which is an eccentric motion along a circular path around the centre, which is provided by an eccentric drive unit. The eccentric drive unit comprises a rotational element with an eccentric connection to the driving member for causing the eccentric first mode of motion of the driving member by rotation of the rotational element.

For example, the driving member comprises a plurality of connection points arranged on a circle, optionally arranged in a single plane identical to the above-mentioned horizontal plane or in a single plane parallel to it. Each piston is connected to only one of these connection points by a piston rod. The piston rod has a first rod end and a second rod end. The first rod end is connected rotationally to the piston. For each piston, or for each piston but one, the second rod end is rotationally fastened to the driving member at one of the connection points.

In the case, where each piston but one is connected rotationally to the connection points, and one single piston rod is connected non-rotational to a connection point on

the driving member, the configuration resembles the principles of a typical radial engine. However, as will be described below, there have also been found technical solutions where all piston rods are rotationally fastened to the driving member. In the latter case, a different delimitation arrangement is necessary for delimiting the angular excursion of the driving member in order to prevent the driving member to rotate to a degree where the piston rods get stuck. In both embodiments, the eccentric drive unit only rotates back and forth in an eccentric wiggling movement over a fraction of a circle, similarly to the corresponding motion of the crank disc in a radial engine.

In one example, the motion delimiting arrangement comprises a plurality of rollers with identical outer roller diameter and distributed spatially in a horizontal plane, each roller being provided inside one of a plurality of identical rings distributed correspondingly and with a ring diameter larger than the roller diameter. For example, the number of rollers and rings are three, optionally arranged according to an equilateral triangle. This way, the first mode of motion is limited by the relative circular movement between the rings and the rollers abutting each other along the inner surfaces of the rings. In some embodiments, rings are connected to the frame, for example by a flange, and the cooperating rollers are connected to the driving member for following the first mode of motion together with the driving member. Alternatively, the rings are connected to the driving member and the rollers are connected to the frame, for example by a flange.

Another example for a delimiting arrangement comprises excursion stoppers provided on either side of the piston rods on the driving unit. Such excursion stoppers limit the rotation of the driving unit to predetermined angles between the piston rods and the driving unit. An example of such excursion stoppers are stop pins as disclosed in US patent application US2010/0107637 by Schoell describing a Waste Heat Engine.

The reciprocating motion of the piston comprises a forward end point and a backward end point. In a further embodiment, the forward end point is adjustable by an adjustment mechanism. In the case, where the piston is arranged for entering the press channel, the forward end point is determining the insertion depth of the piston into the press channel. In the case, where the piston is not arranged for entering the press channel, the forward end point determines the minimum distance to the press channel inlet. Such

an adjustment mechanism is useful for adjusting the compression strength per thrust and allows regulation of the force on the equipment when using various materials for production of the biomass members.

Also, in start-up situations, the retraction of the forward end point of the pistons is an advantage, seeing that start-up with hardened material in the press channels otherwise can be difficult due to the star configuration, where always some of the pistons are on their way forward during the first mode of motion. For start-up conditions, the forward end point of the piston can be adjusted backwards prior to start-up and then adjusted forward, once the apparatus is running. In practice, the forward end point of the piston is adjusted backwards by the adjustment mechanism for reducing the insertion depth of the pistons or for preventing the pistons to enter the channels during start-up. Then, the apparatus is started and the driving member is set into the eccentric motion, which activates the pistons into the reciprocating movement. While driving of the driving member, the forward end point is gradually adjusted forward in order to gradually press more biomass into the press channel. The rearward adjustment of the forward end point prior to start of the machine and the subsequent forward return of the forward end point when the machine is running allows the machine to gain inertia for overcoming the resistance in the extruder channel. In comparison to the star like prior art machine of German patent DE102009015210 by Perdekamp, a forward movement of the matrix away from the piston is not possible, as the matrix is stationary in the above described apparatus. Therefore, an adjustment mechanism for temporary rearward adjustment of the forward end point of the reciprocating motion of the piston is useful.

Accordingly, in further embodiments, the adjustment mechanism is provided by a second mode of motion of the driving member, the second mode of motion being independent of the first mode of motion. For example, this can be achieved by providing an actuator inside the piston for reducing the length of the piston by pulling the front part of the piston towards the rear part and thereby adjusting the forward end point rearwards away from the press channel. Another adjustment mechanism is found in providing piston rods with an actuator that changes the length of the piston rod, which also

leads to a rearward adjustment of the forward end point. These two systems can also be combined.

A further alternative technical solution is provided by rotation of the driving member in the horizontal plane, wherein the rotation is limited to a fraction of the angular distance between adjacent connection points. Rotation of the driving member results in adjustment of the angle of the piston rod relatively to the driving member and relatively to the piston. Due to this angular offset of the piston rod, the distance between the driving member and the rear of the piston is adjusted. If the driving member is rotated towards an increased angle between the piston rod and the direction of reciprocation, the piston is retracted and the forward end point thereby adjusted rearwards. For example, the driving unit is rotated by the second mode of motion from one angular position to a second position, which results in a change of distance between the forward end point of the reciprocating piston motion and the press channel. The adjustment of the angle of the driving member by the second mode of motion results in an angular offset for the range of angles during the first mode of motion.

Coming back to the optional connection of the rollers or rings to a flange, for example a triangular arrangement of rings, the flange is in advantageously part of the adjustment mechanism where the flange is rotationally fastened to the stationary frame. Rotating the flange in the second mode of motion about the centre by a fraction of the angular distance between adjacent connection points, also, rotates the plurality of rings that are fastened to the flange. The rollers that are fastened to the driving unit and are positioned inside the rings, consequently, follow this angular offset of the rings about the centre, which is turn also gives the driving unit an angular offset by the same angle. For example, for nine connection points, the angular equidistance between adjacent connection points is 40 degrees, and the angular offset by second mode of motion would typically be limited to between 10 and 15 degrees or roughly between 1/4 and 1/3 of the angular equidistance between adjacent connection points. Generally, the fraction of the angular equidistance between adjacent connection points is less than 1/2, and typically between 1/4 and 1/2, for example between 1/4 and 1/3.

In a practical embodiment, the flange is rotationally fastened to the stationary frame, and an actuator system connects the stationary frame with the flange, such that activation of the actuator system rotates the flange in the horizontal plane about the centre in order to provide the angular offset by the second mode of motion. For example, the actuator system comprises a plurality of linear actuators arranged off centred relatively to the centre and with the linear actuation direction being substantially tangential to a circle about the centre. In a practical embodiment, the actuators are fastened with one end to the stationary frame and with their opposite end to the flange.

Each of the channels comprises a channel inlet at a first channel end and a channel outlet at a second, opposite channel end for extrusion of the biomass in compacted form. The pistons are arranged for pushing the compressed biomass members from the channel inlet through the channels and out of the channels at the channel outlet by their repeated forward motion. Optionally, for increased compression, each of the channels is tapering towards the channel outlet for additional compression of the biomass during pushing of the biomass through the channel by the piston.

For smoothly guided linear movement of the pistons, optionally, the pistons are provided in abutment with ball bearings or roller bearings. This is in contrast to the typical sliding bearings that are used in this type of machines.

As mentioned above, the eccentric drive unit comprising a rotational element with an eccentric connection to the driving member for causing the eccentric first mode of motion of the driving member by rotation of the rotational element. Advantageously, the rotational element is arranged rotational about a rotation axis at the centre, and the eccentric connection comprises a circular member with an eccentric centre that is offset from the rotation axis. The eccentrically offset circular member is connected to the driving member for eccentric first mode of motion. For example the circular member is provided inside the driving member with a roller bearing or ball bearing between the circular member and the driving unit. Optionally, the circular member, the driving member and the bearings there between are all arranged in a horizontal plane. For example, the rotational element is driven by a flywheel that is driven by electrical motors.

In a further embodiment, the apparatus is modular with modular extensions, where each module comprises an equal number of press units, for example two, three or four. For example, the apparatus is provided in a first modular form with three press units. In a second step, this is extended to six units or to nine units. The plurality of press units are advantageously arranged with identical angular distance between adjacent press units and in a horizontal plane. It has been found that multiples of three are useful for good balance, although also multiples of two, four or five is possible. Once, the apparatus has been extended to a suitable maximum number of press units, for example nine press units in one horizontal plane, the apparatus can be further extended to accommodate even further press units in a second horizontal plane, above or below the first horizontal plane.

ASPECTS OF THE INVENTION

In the following various interrelated aspects of the invention are described.

Aspect 1: An apparatus (1) for producing compressed biomass members, the apparatus comprising a plurality of press units (2) in a stationary frame (3); each press unit (6) comprising a matrix (19) with a press channel (6) and a linearly reciprocating piston (20) arranged coaxially with the press channel (6) for pushing biomass into the press channel (6) and for compression of the biomass in the press channel (6) during forward piston motion; wherein the press units (2) are arranged in a horizontal plane (4) in a star pattern around a centre (5) with the piston motion being radial from the centre (5); characterised in that the matrix (19) is arranged stationary.

Aspect 2: An apparatus according to aspect 1, wherein the apparatus comprises a driving member (30) for driving the pistons (20), the driving member (30) being configured for a first mode of motion, which is an eccentric motion along a circular path around the centre (5); wherein the first mode of motion of the driving member (30) is provided by an eccentric drive unit (36), the eccentric drive unit (36) comprising a rotational element (10, 37) with an eccentric connection to the driving member (30) for causing the eccentric first mode of motion of the driving member (30) by rotation of the rotational element (37); the driving member (30) comprising a plurality of connection points (31) arranged on a circle, each piston (20) being connected to only one of these

connection points (31) by a piston rod (32), the piston rod (32) having a first rod end (33) and a second rod end (33'), wherein the first rod end (33) is connected rotationally to the piston (20); wherein for each piston (20), or for each piston (20) but one, the second rod (33') end is rotationally fastened to the driving member (30) at one of the connection points (31).

Aspect 3: An apparatus according to aspect 2, wherein the connection points (31) on the circle are in a single plane identical to the horizontal plane (4) or parallel with it.

Aspect 4: An apparatus according to any preceding aspect, wherein the reciprocating motion of the piston (20) comprises a forward end point (20') and a backward end point, wherein the forward end point (20') is adjustable by an adjustment mechanism (50).

Aspect 5: An apparatus according to aspect 4, wherein the adjustment mechanism (50) is provided by a second mode of motion of the driving member (30), the second mode of motion being independent of the first mode of motion; the second mode of motion being a rotation of the driving member (30) in the single plane, the rotation being limited to a fraction of the angular distance between adjacent connection points (31), for by rotation of the driving member (30) to offset the angle of the piston rod (32) relatively to the piston (20).

Aspect 6: An apparatus according to aspect 2 or 3 or according to aspect 4 or 5 when directly or indirectly dependent on aspect 2, wherein for each piston (20), the second rod end (33') is rotationally fastened to the driving member (30) at one of the connection points (31); wherein first mode of motion is delimited by a motion delimiting arrangement (47), the motion delimiting arrangement (47) comprising a plurality of rollers (48) with identical outer roller diameter and distributed spatially in a horizontal plane, each roller (48) being provided inside one of a plurality of identical rings (49) distributed correspondingly and with a ring diameter larger than the roller diameter for the first mode of motion being limited by the relative circular movement between the rings (48) and the rollers (49) abutting each other along the inner surfaces of the rings; wherein the rings (49) are connected to the frame (3) and the cooperating rollers (48)

are connected to the driving member (30) for following the first mode of motion together with the driving member (30), or wherein the rings (49) are connected to the driving member (30) and the rollers (48) are connected to the frame (3).

Aspect 7: An apparatus according to aspect 6, wherein the rings (49) or the rollers (48), respectively, are connected to the frame (3) via a flange (50) that is rotationally fastened to the frame (3); and wherein the second mode of motion is provided by an actuator system; the actuator system connecting the stationary frame (3) with the flange (50) such that activation of the actuator system rotates the flange (50) in the horizontal plane (4) about the centre (5).

Aspect 8: An apparatus according to any preceding aspect, wherein each of the press channels (6) comprises a channel inlet (24) at a first channel end and a channel outlet at a second, opposite channel end for extrusion of the biomass in compacted form, wherein the pistons (20) are arranged for pushing the compressed biomass members from the channel inlet (24) through the press channels (6) and out of the channels at the channel outlet by their repeated forward motion; wherein each of the press channels (6) comprise a tapering part (18) towards the channel outlet for additional compression of the biomass during pushing of the biomass through the press channel (6) by the piston (2).

Aspect 9: An apparatus according to any preceding aspect, wherein the pistons (20) are provided in abutment with ball bearings or roller bearings for smoothly guided linear movement of the pistons (20) by the bearings (23).

Aspect 10: A method for start-up of an apparatus (1) according to aspect 4 and any one of the aspects 5-9 when directly or indirectly dependent on aspect 4, wherein the method comprises:

- moving the forward end point (20') of the reciprocating motion of the piston (20) rearwards by the adjustment mechanism (50) in a second mode of motion;
- then starting the apparatus and driving the driving member (30) by a first mode of motion, the first mode of motion being independent of the second mode of motion;

- subsequently, during driving of the driving member (39) in the first mode of motion, by the adjustment mechanism (50) gradually moving the forward end point forward by the second mode of motion.

SHORT DESCRIPTION OF THE DRAWINGS

The invention will be explained in more detail with reference to the drawing, where

FIG. 1 illustrates an apparatus for producing compressed biomass members in a) top view and b) side view;

FIG. 2 illustrates an adjustment mechanism for retraction of the pistons in a) a first extreme angular orientation and b) a second extreme angular orientation;

DETAILED DESCRIPTION / PREFERRED EMBODIMENT

FIG. 1a is top view and FIG. 1b in side view of an apparatus 1 for producing compressed biomass members. A plurality of press units 2 are provided in a stationary floor 54 based frame 3 and arranged in a horizontal plane 4 in a star-configuration around a centre 5. The number of press units 2 is nine in FIG. 1a as an example but can be different. For the nine press units 2, three electrical motors 7 are provided, each of the motors 7 comprising a belt pulley 8 with a belt 9 pulling a flywheel which is driving the compression in the press units 2. For feeding the press units 2 with biomass, biomass in provided from a feeding facility, typically a feed conveyor, into a container 11 is provided above the press units 2. Various transporters 13, 14 are used to feed biomass from the feed container 11 into the press units 2. Once, the biomass has been compressed into a solid member, for example a pellet or briquette, it is extruded from the press channel 6 onto a conveyor 55 that extends in a circle around the frame 3 below the outlets of the press channels 6. The conveyor 55 collects the compressed members and conveys these to a facility for further handling, for example storage or packing facility. For adjustment of the back pressure in order to promote compaction, a back pressure adjustment mechanism 56 is provided at the exit of the press unit 2.

The illustrated apparatus 1 is optionally provided modular in the sense that it can be operated with three, six, or nine press units 2 in the same plane 4. Further planes with three, six, or nine units can be placed in a second plane on top of the shown plane in order to increase the capacity. Each of the motors 7 is dimensioned for being strong enough for driving at least three press units 2, such that for a modular apparatus with only three or six press units 2, one or two motors 7, respectively, are used. Alternatively, instead of multiples of three press units, the apparatus can also be constructed with multiple of two press units.

Inside the feed container 11, there are provided container outlets 12 with horizontal screw conveyors 13 that take out biomass from the feed container 11 and convey it to a vertical screw conveyor 14 that is feeding the biomass into an accumulation chamber 15 for compression. The screw conveyors 13, 14 are driven by small electrical motors 17a, 17b, one for each conveyor 13, 14. The vertical screw conveyor 14 transports the biomass downwards into the accumulation chamber 15 that connects with the inlet of the press channel 6 inside the matrix 19, which is stationary mounted onto the end flange 16 of the accumulation chamber 15. The end flange 16 is stationary with respect to the frame 3.

From the second, opposite side of the accumulation chamber a piston, which will be explained in greater detail below, is coaxial with the press channel 6 and is reciprocating between a forward end point and a rearward end point through the chamber 15 towards the press channel 6. By reciprocation, the piston 20 presses repeatedly further biomass into the press channel 6 and the force on the biomass by the piston 20 compresses the biomass inside the press channel 6. The forward thrust of the piston 20 not only compresses the biomass inside the press channel 6 but also moves it forward towards the channel outlet for extrusion of the compressed biomass as compressed members, for example briquettes.

FIG. 2a is a principle sketch of the pistons 20 and the driving unit 30. A driving member 30 with an eccentric first mode of motion is provided for driving the pistons 20. The driving member 30 comprises 3-9 connection points 31 arranged on a circle in a horizontal plane. Each piston 20 is connected to one of these connection points 31 by a

piston rod 32. The first end 33 of the piston rod 32 has a first rotational connection 34 by which it connects rotationally to the rear part 26 of the piston 20. The second end 33' of the piston rod 32 is rotationally fastened by a second rotational connection 34' to the driving member 30 at one of the connection points 31.

As illustrated, the piston 20 does not enter the press channel 6, but the forward end point 20' of the reciprocating motion is outside the press channel 6. This is necessary due to the tapering part 18 extending to the inlet of the press channel 6. The entering is also not necessary, as the screw conveyor 14 fills the accumulation chamber 15, and the piston 20 creates force on the biomass which pushes the biomass into the press channel 6, as the biomass cannot escape to anywhere else from the accumulation chamber 15. Alternatively, the tapering part 18 can be avoided, or the channel inlet comprises a cylindrical region deep enough for the piston 20 to enter, such that the forward end point 20' of the reciprocating motion is inside the press channel 6, and the rearward end point is outside the channel 6 and in the accumulation chamber 15. However, by not forcing the piston 20 into the press channel 6 in the matrix 19, the requirement for dimensional precision is less strict, which production-wise is an advantage. As illustrated in FIG. 2a, the press channel 6 may have a tapering part for sideways compression of the biomass during extrusion.

A first mode of motion of the driving unit 30 is provided by an eccentric drive unit 36, which comprises a flywheel (not shown). The flywheel is driven by belts 9 that are connected to the electrical motors 7.

The principle of the machine is similar to that of a radial engine. In a radial engine for airplanes, one of the piston rods has a rotational connection to the corresponding piston but does not have a rotational connection with the eccentric driving member. This is done in order to prevent rotation of the driving member into a position where all piston rods get stuck. The system according to the invention can be modified such that for each piston 20 but one, the second rod end 33' is rotationally fastened to the driving member 30 at one of the connection points 31. Thus for the specific example above with the nine press units 2, all nine piston rods 32 would at their first end 33 have a first rotational connection 34 with the piston 20, but only eight of the nine piston rods

32 would have second a rotational connection 34' at the second end 33' with the driving member 30. The one piston rod having a rigid, non-rotational connection to the driving member 30 would prevent the driving member 30 from rotating into a blocking orientation. However, such a system where not all connections are identical suffers from non-symmetric wear, why a different stabilising system is described in the following.

As illustrated in FIG. 2a, the first mode of motion is delimited by a motion delimiting arrangement 47 comprising three rollers 48 arranged according to an equilateral triangle. Each roller 48 is limited in its motion by a ring 49. Whereas the rings 49 are connected to the frame via a flange 50, the rollers 48 are connected to the driving member 30. During the first mode of motion, which is attained during normal steady state pressing operation, the rings are stationary with respect to the frame. The eccentric movement of the driving unit 30 is limited by the movement of the rollers 48 inside the rings 49. This delimiting arrangement 47 prevents the driving unit 30 from rotating into an orientation in which the piston rods 32 get stuck. Due to the delimiting arrangement 47, it is possible that all piston rods 32 are connected rotational to the driving member 30 as illustrated in FIG. 2a.

If the driving member is delimited by a piston rod being fixed in one end, the motion of these 3 points will describe a perfect circle, when the eccentric driving unit 36 is rotated. Thus, it is possible to delimit the driving member 30 by attaching a roller to each of the 3 points, and letting each roller 48 run inside a rings 49 as a fixed circular race.

An alternative arrangement implies rings 49 connected to the driving member 30 and rollers 48 connected to the frame 3 at stationary positions. The embodiment of FIG 2a is one example of a possibility for delimiting the rotational degree of freedom for the driving unit 30, although also other arrangements are possible, as long as there are provided end stops for the rotation of the driving member.

However, one further advantage of the roller 48 and ring 49 combination becomes apparent below, motivated by a start-up condition of the apparatus 1 after production

break, where the biomass in the accumulation chambers 15 and press channels 6 imply a tough resistance against the pistons 20 moving forward.

The reciprocating motion of the piston 20 comprises a forward end point 20' and a backward end point. In a further embodiment, the forward end point 20' is adjustable by an adjustment mechanism. In the case, where the piston 20 is entering the press channel 6, the forward end point is determining the insertion depth of the piston 20 into the press channel 6. In the case, where the piston 20 is not entering the press channel 6, the forward end point determines the minimum distance to the press channel inlet 24. Such an adjustment mechanism is useful for adjusting the compression strength per thrust and allows regulation of the force on the equipment when using various materials for production of the biomass members. Also, in start-up situations, the retraction of the forward end point of the pistons 20 is an advantage, seeing that start-up with hardened material in the press channels 6 otherwise can be difficult due to the star configuration, where some of the pistons 20 are always on their way forward during the first mode of motion. For start-up conditions, forward end point of the piston can be adjusted backwards prior to start-up and then adjusted forward, once the apparatus is running.

In practice, the forward end point of the piston is adjusted backwards by the adjustment mechanism for reducing the insertion depth of the pistons 20 or for preventing the pistons 20 to enter the channels 6 during start-up. Then, the apparatus 1 is started and the driving member 30 is set into the eccentric motion, which activates the pistons 20 into the reciprocating movement. While driving of the driving member 30, the forward end point 20' is gradually adjusted forward in order to gradually press more biomass into the press channel 6. The rearward adjustment of the forward end point 20' prior to start of the machine and the subsequent forward return of the forward end point when the machine is running allows the machine to gain inertia for overcoming the resistance in the extruder channel.

For example, the adjustment of the forward end point 20' of the reciprocation can be achieved by providing an actuator inside the piston 20 for reducing the length of the piston 20. An actuator could, thus, be used to shorten the overall length of the piston

20 and thereby pull the front part 25 rearwards away from the press channel 6. Another adjustment mechanism is found is providing piston rods 32 with an actuator that changes the length of the piston rod 32. By reducing the length of the piston rod 32, the piston 20 is retracted. These two systems, which are not illustrated but mentioned as examples in general, can also be combined.

An even further adjustment mechanism is described in more detail in the following with reference to FIG. 2b. In this case, the circular rings 49, which delimit the motion of the driving member 30, are arranged fixed to a flange 50 which is rotatable about the centre 5 over a minor angle in a horizontal plane relatively to the frame 3. This rotation is a second mode of motion of the driving unit 30 and is independent of the first mode of motion. Whereas the first mode of motion of the driving unit 30 during production of compressed biomass members is a steady and repeated eccentric wiggling around a circle, the second mode of motion is obtained by an actuator system that rotates the flange 50 into an angular offset by only a fraction of the angular distance between adjacent connection points 31. The result of doing this is seen in FIG. 2b as compared to FIG. 2a, wherein FIG. 2a shows the geometry and forward end point 20' of the pistons and the corresponding angular orientation of the piston rods 32 before the second mode of motion is carried out, and image 2b shows the geometry and forward ends point 20' of the pistons 20 after the retraction of the pistons 20.

For example, in the present embodiment with nine connection points 31, the equiangular distance between the connection points is 360/9=40 degrees. The angle that the three rings are moved is a fraction of the angular distance between adjacent connection points 31. The two drawings in FIG. 2a and FIG. 2b show the two extreme angular positions for the second mode of motion. It is seen that the angular distance between the two extreme positions of FIG. 2a and FIG. 2b, respectively, is less than half the angular distance between the connection points 31. Typically, it is between 1/4 and 1/3 of the angular distance between the connection points 31.

It is observed that the pistons in FIG. 2b are retracted relatively to the pistons in FIG. 2a. In an upstart situation, the forward end point 20' of the reciprocation of the pistons 20 is retracted first by rotating the flange 50 with the rings 49 about the centre 5 into

one of the extreme positions by the second mode of motion, then the motors 7 are started to rotate the flywheel and the connected driving unit 30 in the first mode of motion. The rotation of the set of the flange 50 with the rings 49 about the centre 5 yields an angular offset of the piston rods for the first mode of motion. In this position, the pistons 20 have sufficient space such that they do not immediately start compressing the remains of the biomass in the press channel 6. Once, the apparatus is running, the actuator system is activated to return set of rings 49 to the other angular extreme orientation, which is used for normal production operation with the forward end point of the reciprocation being in proximity of the inlet of the press channel 6 for maximum advance of the pistons 20. This change can be done smoothly and slowly in case that the biomass that remains in the press channels 6 has hardened and has to be pushed out gradually before smooth and steady operation of the production, where the driving unit 30 and pistons 20 work only in the first mode of operation.

Reference numbers in drawings

1 apparatus

2 press units

3 frame

4 horizontal plane through centre 5

5 centre of star press

6 press channel

7 electrical motors

8 belt pulley

9 belt

11 feed container

12 transporters

13 horizontal screw conveyor for extraction of biomass from container 11

14 vertical screw conveyor feeding biomass into chamber 15

15 accumulation chamber for compression

16 flange of chamber 15 for mount of press channel 6

17a, 17b small motors for screw conveyors 13, 14

19 matrix

20 piston

20’ forward end point of piston movement

23 bearings for piston

24 channel inlet

25 piston front part

26 piston rear part

30 driving member

31 connection points on driving member 30

32 piston rod

33 first end of piston rod 32

33’ second end of piston rod 32

34 first rotational connection between first end 33 of piston rod and rear part 26 of piston

34’ second rotational connection between second end 33’ of piston rod and driving member 30

36 eccentric drive unit

37 axle of eccentric drive unit 36

47 delimiting arrangement for delimiting the angular movement of the driving member 30

48 roller fixed to driving member 30

49 ring

50 flange

54 floor

55 conveyor for transport of briquettes or pellets after extrusion

56 adjustment mechanism for back pressure on briquette

CLAIMS

1. An apparatus (1) for producing compressed biomass members, the apparatus comprising a plurality of press units (2) in a stationary frame (3); each press unit (2) comprising a matrix (19) with a press channel (6) and a linearly reciprocating piston (20) arranged coaxially with the press channel (6) for pushing biomass into the press channel (6) and for compression of the biomass in the press channel (6) during forward piston motion; wherein the press units (2) are arranged in a horizontal plane (4) in a star pattern around a centre (5) with the piston motion being radial from the centre (5); wherein the matrix (19) is arranged stationary, wherein the apparatus comprises a driving member (30) for driving the pistons (20), the driving member (30) being configured for a first mode of motion, which is an eccentric motion along a circular path around the centre (5); wherein the first mode of motion of the driving member (30) is provided by an eccentric drive unit (36), the eccentric drive unit (36) comprising a rotational element (37) with an eccentric connection to the driving member (30) for causing the eccentric first mode of motion of the driving member (30) by rotation of the rotational element (37); the driving member (30) comprising a plurality of connection points (31) arranged on a circle, each piston (20) being connected to only one of these connection points (31) by a piston rod (32), **characterised in that** the piston rod (32) has a first rod end (33) and a second rod end (33'), wherein the first rod end (33) is connected rotationally to the piston (20); wherein for each piston (20), or for each piston (20) but one, the second rod (33') end is rotationally fastened to the driving member (30) at one of the connection points (31).

2. An apparatus according to claim 1, wherein the connection points (31) on the circle are in a single plane identical to the horizontal plane (4) or parallel with it.

3. An apparatus according to claim 1 or 2, wherein the reciprocating motion of the piston (20) comprises a forward end point (20') and a backward end point, wherein the forward end point (20') is adjustable by an adjustment mechanism (50).

4. An apparatus according to claim 3, wherein the adjustment mechanism (50) is provided by a second mode of motion of the driving member (30), the second mode of motion being independent of the first mode of motion; the second mode of motion being a rotation of the driving member (30) in the single plane, the rotation being limited to a fraction of the angular distance between adjacent connection points (31), for by rotation of the driving member (30) to offset the angle of the piston rod (32) relatively to the piston (20).

5. An apparatus according to any preceding claim, wherein for each piston (20), the second rod end (33') is rotationally fastened to the driving member (30) at one of the connection points (31); wherein first mode of motion is delimited by a motion delimiting arrangement (47), the motion delimiting arrangement (47) comprising a plurality of rollers (48) with identical outer roller diameter and distributed spatially in a horizontal plane, each roller (48) being provided inside one of a plurality of identical rings (49) distributed correspondingly and with a ring diameter larger than the roller diameter for the first mode of motion being limited by the relative circular movement between the rings (48) and the rollers (49) abutting each other along the inner surfaces of the rings; wherein the rings (49) are connected to the frame (3) and the cooperating rollers (48) are connected to the driving member (30) for following the first mode of motion together with the driving member (30), or wherein the rings (49) are connected to the driving member (30) and the rollers (48) are connected to the frame (3).

6. An apparatus according to claim 5, wherein the rings (49) or the rollers (48), respectively, are connected to the frame (3) via a flange (50) that is rotationally fastened to the frame (3); and wherein the second mode of motion is provided by an actuator system; the actuator system connecting the stationary frame (3) with the flange (50) such that activation of the actuator system rotates the flange (50) in the horizontal plane (4) about the centre (5).

7. An apparatus according to any preceding claim, wherein each of the press channels (6) comprises a channel inlet (24) at a first channel end and a channel outlet at a second, opposite channel end for extrusion of the biomass in compacted form, wherein the pistons (20) are arranged for pushing the compressed biomass members from the chan-

nel inlet (24) through the press channels (6) and out of the channels at the channel outlet by their repeated forward motion; wherein each of the press channels (6) comprise a tapering part (18) towards the channel outlet for additional compression of the biomass during pushing of the biomass through the press channel (6) by the piston (2).

8. An apparatus according to any preceding claim, wherein the pistons (20) are provided in abutment with ball bearings or roller bearings for smoothly guided linear movement of the pistons (20) by the bearings (23).

9. A method for start-up of an apparatus (1) according to claim 3 and any one of the claims 4-8 when directly or indirectly dependent on claim 3, wherein the method comprises:

- moving the forward end point (20') of the reciprocating motion of the piston (20) rearwards by the adjustment mechanism (50) in a second mode of motion;
- then starting the apparatus and driving the driving member (30) by a first mode of motion, the first mode of motion being independent of the second mode of motion;
- subsequently, during driving of the driving member (30) in the first mode of motion, by the adjustment mechanism (50) gradually moving the forward end point forward by the second mode of motion.

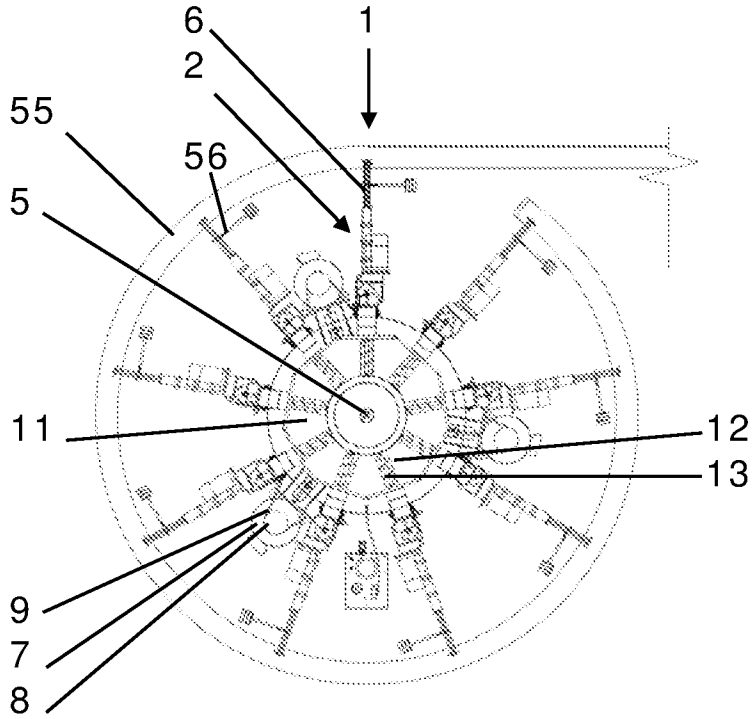

FIG. 1a

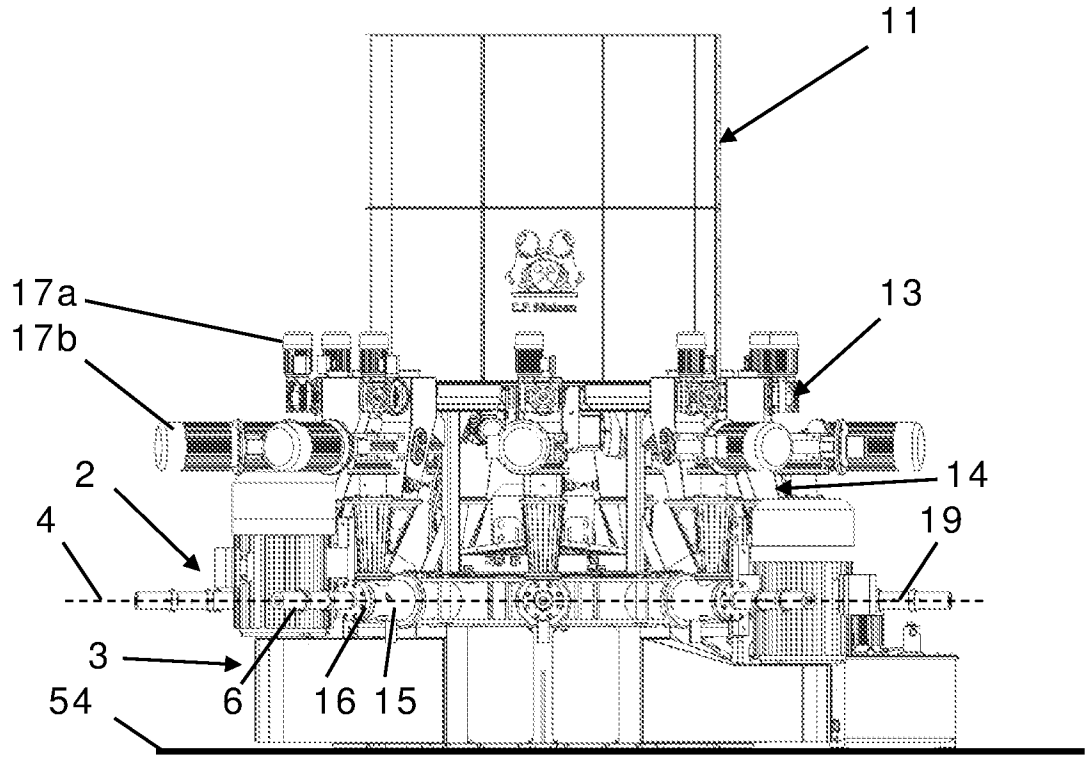

FIG. 1b

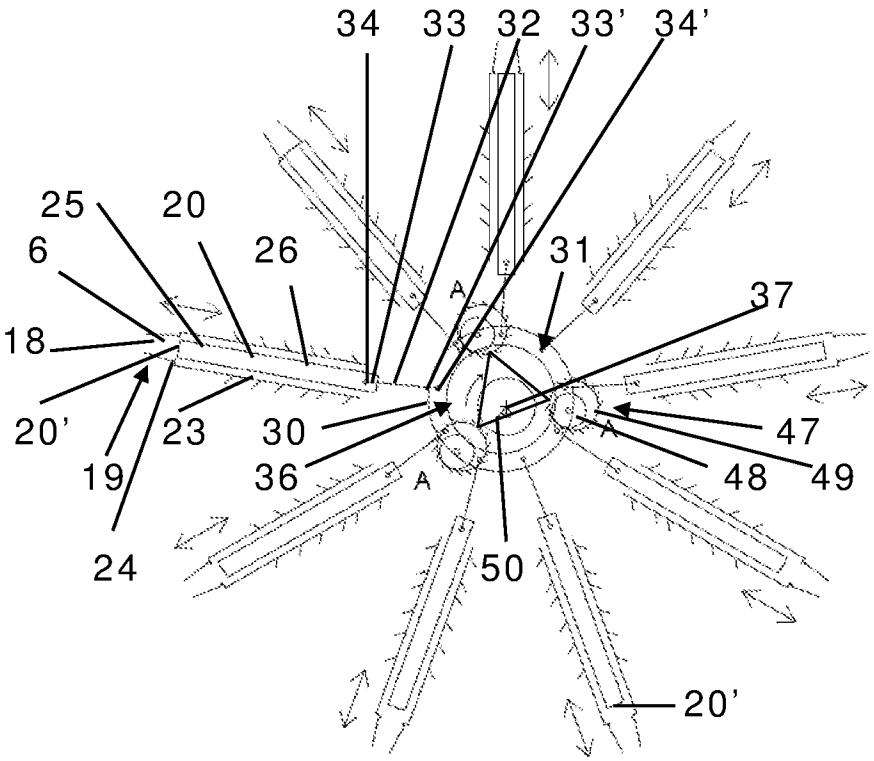
34
33
32
33'
34'
25
20
6
26
31
37
18
20'
23
30
47
19
36
48
49
24
50
20'
A
A
A

FIG. 2a

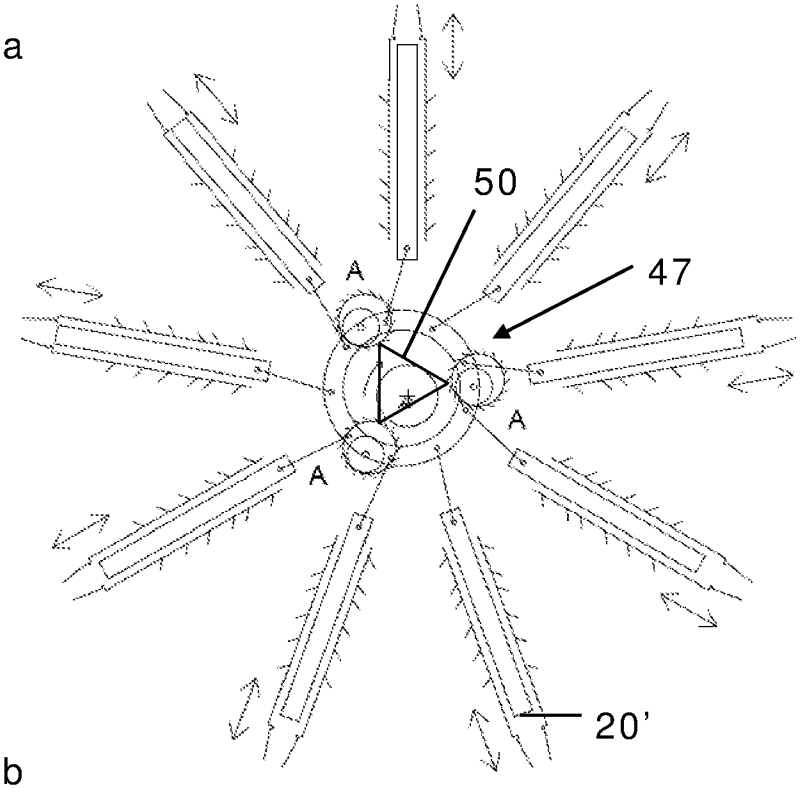
50
47
A
A
A
20'

FIG. 2b

INTERNATIONAL SEARCH REPORT

International application No.

PCT/DK2016/050115

A. CLASSIFICATION OF SUBJECT MATTER

B30B 11/26 (2006.01), B30B 9/28 (2006.01), B30B 11/06 (2006.01)

According to International Patent Classification (IPC) or to both national classification and IPC

B. FIELDS SEARCHED

Minimum documentation searched (classification system followed by classification symbols)

IPC&CPC: B30B

Documentation searched other than minimum documentation to the extent that such documents are included in the fields searched

DK, NO, SE, FI: Classes as above.

Electronic data base consulted during the international search (name of data base and, where practicable, search terms used)

EPODOC, WPI, FULLTEXT:ENGLISH

C. DOCUMENTS CONSIDERED TO BE RELEVANT

Category*	Citation of document, with indication, where appropriate, of the relevant passages	Relevant to claim No.
A	WO 97/16305 A1 (FALKNER RAIMUND) 1997-05-09. See Fig. 1-5, abstract and Page 3, Line 30 - Page 6, Line 20.	1-9
A	GB 1910 26790 A (DEBAUCHE HUBERT JOSEPH) 1911-10-12. See Figs. 1-4.	1-9
A	CN 201205762 Y (LIAONING XINNENG MACHINERY EQU) 2009-03-11. See Fig. 1-2.	1-9
A	WO 2005/115734 A1 (MINIPELL AKTIEBOLAG) 2005-12-08. See Fig. 1-6, Abstract and Page 6, line 6 to Page 7, line 10.	1-9
A	DE 19949335 A1 (FORSTER BRUNO F. DIPL.-ING.) 2001-04-19. See. Fig. 1-2, Abstract and Column 2, Line 32 to Column 3, line 15.	1-9
A	WO 2011/006253 A1 (SUNOPTA BIOPROCESS INC.) 2011-01-20. See whole document.	1-9
A	DD 206345 A1 (PENKALLA HANS) 1984-01-25. See Fig. 1-3, Abstract and lines 114-183.	1-9

☐ Further documents are listed in the continuation of Box C. ☒ See patent family annex.

* Special categories of cited documents:

"A" document defining the general state of the art which is not considered to be of particular relevance

"E" earlier application or patent but published on or after the international filing date

"L" document which may throw doubts on priority claim(s) or which is cited to establish the publication date of another citation or other special reason (as specified)

"O" document referring to an oral disclosure, use, exhibition or other means

"P" document published prior to the international filing date but later than the priority date claimed

"T" later document published after the international filing date or priority date and not in conflict with the application but cited to understand the principle or theory underlying the invention

"X" document of particular relevance; the claimed invention cannot be considered novel or cannot be considered to involve an inventive step when the document is taken alone

"Y" document of particular relevance; the claimed invention cannot be considered to involve an inventive step when the document is combined with one or more other such documents, such combination being obvious to a person skilled in the art

"&" document member of the same patent family

Date of the actual completion of the international search	Date of mailing of the international search report
11/08/2016	18/08/2016
Name and mailing address of the ISA Nordic Patent Institute Helgeshøj Allé 81 DK - 2630 Taastrup, Denmark. Facsimile No. + 45 43 50 80 08	Authorized officer Carsten Købler Telephone No. +45 43 50 85 32

Box No. II Observations where certain claims were found unsearchable (Continuation of item 2 of first sheet)

This international search report has not been established in respect of certain claims under Article 17(2)(a) for the following reasons:

1. ☐ Claims Nos.:
because they relate to subject matter not required to be searched by this Authority, namely:

2. ☐ Claims Nos.:
because they relate to parts of the international application that do not comply with the prescribed requirements to such an extent that no meaningful international search can be carried out, specifically:

3. ☐ Claims Nos.:
because they are dependent claims and are not drafted in accordance with the second and third sentences of Rule 6.4(a).

Box No. III Observations where unity of invention is lacking (Continuation of item 3 of first sheet)

This International Searching Authority found multiple inventions in this international application, as follows:

1. ☐ As all required additional search fees were timely paid by the applicant, this international search report covers all searchable claims.

2. ☐ As all searchable claims could be searched without effort justifying additional fees, this Authority did not invite payment of additional fees.

3. ☐ As only some of the required additional search fees were timely paid by the applicant, this international search report covers only those claims for which fees were paid, specifically claims Nos.:

4. ☐ No required additional search fees were timely paid by the applicant. Consequently, this international search report is restricted to the invention first mentioned in the claims; it is covered by claims Nos.:

Remark on Protest

☐ The additional search fees were accompanied by the applicant's protest and, where applicable, the payment of a protest fee.

☐ The additional search fees were accompanied by the applicant's protest but the applicable protest fee was not paid within the time limit specified in the invitation.

☐ No protest accompanied the payment of additional search fees.

Box No. IV **Text of the abstract (Continuation of item 5 of the first sheet)**

INTERNATIONAL SEARCH REPORT

International application No.

PCT/DK2016/050115

C (Continuation). DOCUMENTS CONSIDERED TO BE RELEVANT

Category*	Citation of document, with indication, where appropriate, of the relevant passages	Relevant to claim No.

INTERNATIONAL SEARCH REPORT
Information on patent family members

International application No.
PCT/DK2016/050115

Patent document cited in search report / Publication date	Patent family member(s) / Publication date
WO 9716305 A1 1997-05-09.	AU 7265296 A 1997.05.22. AT 403442B B 1998.02.25. ATA 177695 A 1997.07.15. EP 0857104 A1 1998.08.12. DK 0857104T T3 1999.10.25.
GB 191026790 A 1911-10-12	NONE
CN 201205762Y 2009-03-11.	NONE
WO 2005115734 A1 2005-12-08.	CA 2568039 A1 2005.12.08. SE 528640 C2 2007.01.09. EP 1755877 A1 2007.02.28. US 2008190015 A1 2008.08.14.
DE 19949335 A1 2001-04-19.	NONE
WO 2011006253 A1 2011-01-20.	CA 2710475 A1 2011.01.17. US 8784072 B2 2014.07.22. CN 102497977 A 2012.06.13.
DD 206345 A1 1984-01-25.	NONE