(No Model.) 3 Sheets—Sheet 1.

A. A. GOUBERT.

SHUTTER FASTENER.

No. 456,114. Patented July 14, 1891.

Fig. 1.

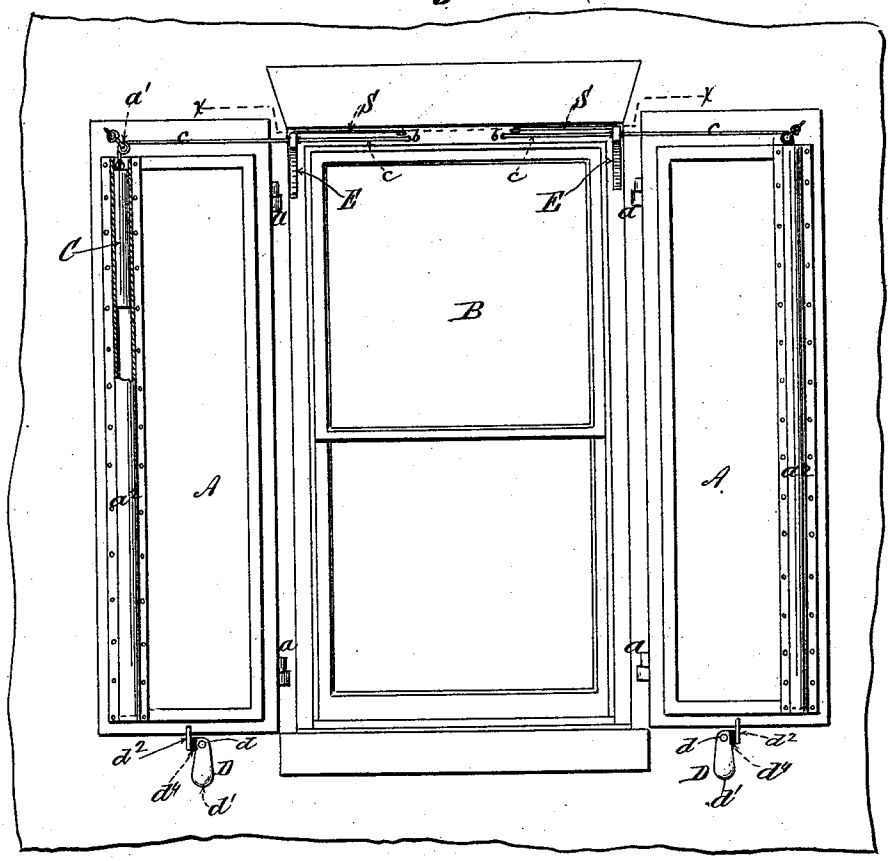

Fig. 2.

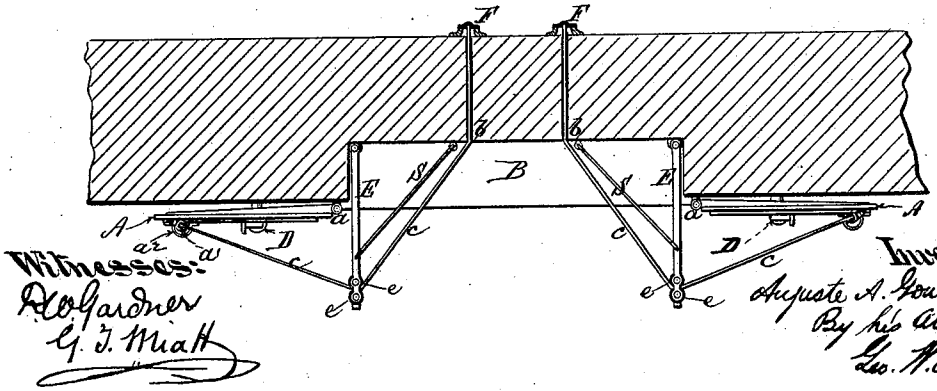

Witnesses:
H. C. Gardner
G. J. Miath

Inventor:
Auguste A. Goubert
By his Attorney
Geo. H. Miath

THE NORRIS PETERS CO., PHOTO-LITHO., WASHINGTON, D. C.

(No Model.) 3 Sheets—Sheet 2.

A. A. GOUBERT.

SHUTTER FASTENER.

No. 456,114. Patented July 14, 1891.

Fig. 3.

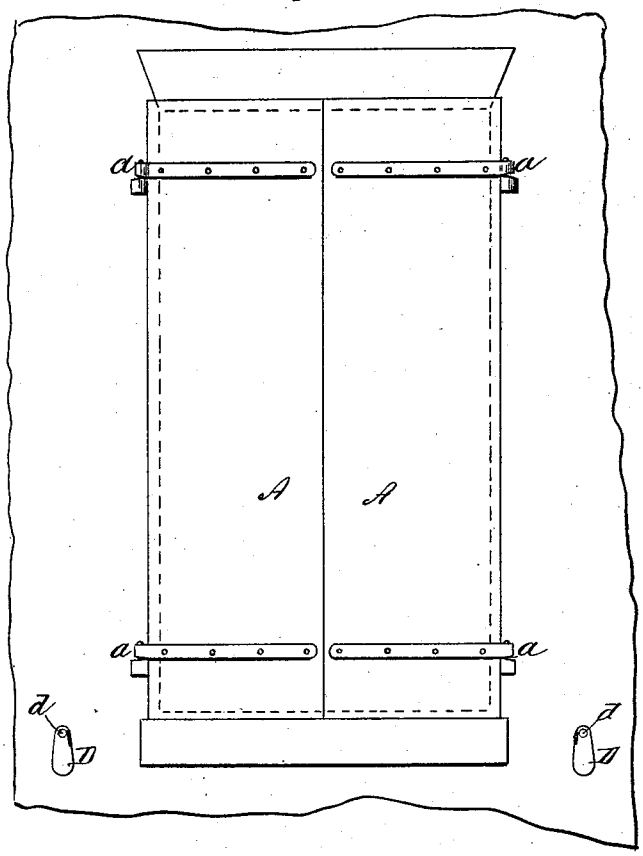

Fig. 4.

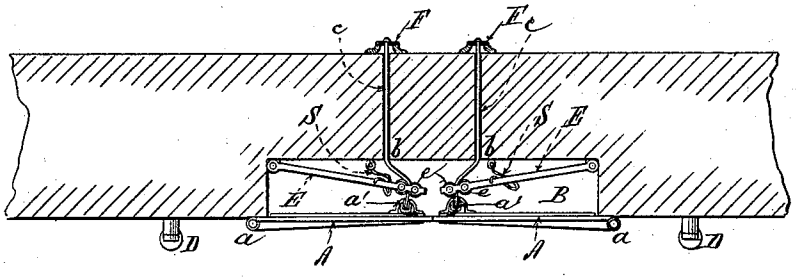

Witnesses:
D. W. Gardner
G. J. Miatt

Inventor:
Auguste A. Goubert
By his attorney
Leo W. Miatt

THE NORRIS PETERS CO., PHOTO-LITHO., WASHINGTON, D. C.

(No Model.) 3 Sheets—Sheet 3.

A. A. GOUBERT.

SHUTTER FASTENER.

No. 456,114. Patented July 14, 1891.

Fig. 5.

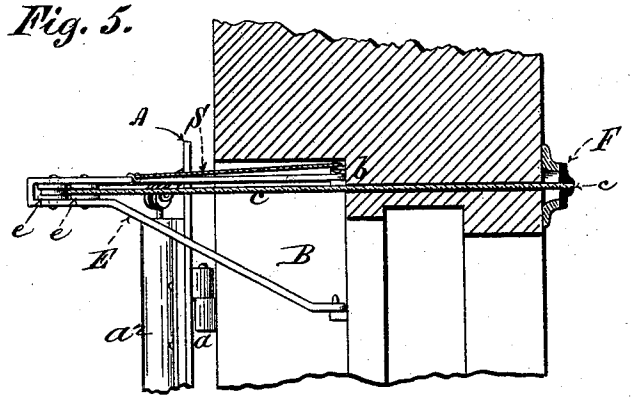

Fig. 6.

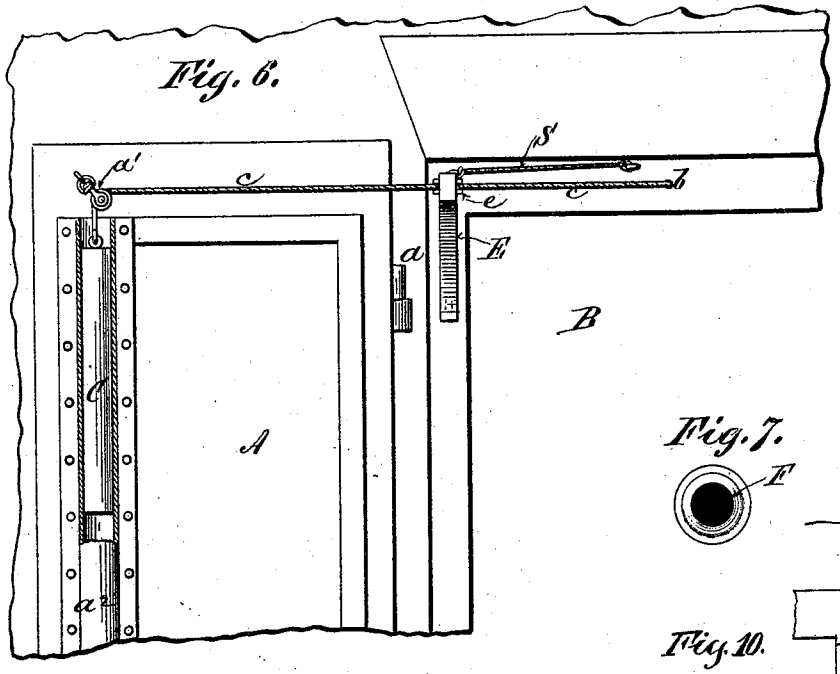

Fig. 7.

Fig. 10.

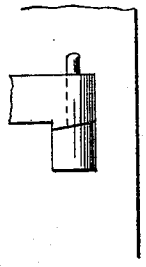

Fig. 8.

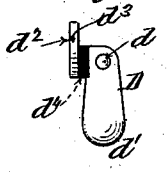

Fig. 9.

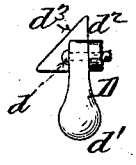

Witnesses:
R. V. Gardner
G. J. Miatt

Inventor:
Auguste A. Goubert
By his Attorneys
Leo. W. Miatt

THE NORRIS PETERS CO., PHOTO-LITHO., WASHINGTON, D. C.

UNITED STATES PATENT OFFICE.

AUGUSTE A. GOUBERT, OF BROOKLYN, ASSIGNOR TO FRANZ O. MATTHIESSEN, OF IRVINGTON, NEW YORK.

SHUTTER-FASTENER.

SPECIFICATION forming part of Letters Patent No. 456,114, dated July 14, 1891.

Application filed June 21, 1890. Serial No. 356,174. (No model.)

To all whom it may concern:

Be it known that I, AUGUSTE A. GOUBERT, a citizen of the United States, residing in the city of Brooklyn, in the county of Kings and State of New York, have invented certain new and useful Improvements in Destructible Fastenings for Iron Shutters, of which the following is a description sufficient to enable those skilled in the art to which the invention appertains to make and use the same.

My improvements relate to the metallic shutters applied to buildings for the purpose of protecting a building against external fire, and more especially to the class of automatically-closing shutters held by fusible connections or fastenings, substantially as set forth in the patent to F. O. Matthiessen, dated April 11, 1882, No. 256,439.

As heretofore used no provision has been made for controlling the shutters from the interior of the building in case of fire within the building itself, in which case it is desirable that the shutters shall be prevented from closing, in order to give ready access to the interior through the windows. In my concurrent application filed herewith, Serial No. 356,175, I show and describe a method of obviating this difficulty by a device arranged to automatically lock the exterior shutter-releasing mechanism, and thereby prevent the closing of the shutters upon the melting of a fusible suspender in the interior of the building, which fusible suspender normally holds the locking device out of engagement with the exterior shutter-releasing mechanism, so that the latter is free to act when exposed to an excess of external heat. In the present application I accomplish a similar result by securing the shutter-closing mechanism in position to act upon the shutters by means of fusible fastenings in the interior of the building, upon the melting of which fastenings the shutter-closing mechanism will be rendered inoperative. It is obvious that this result may be accomplished in various ways without departing from the spirit of my invention, which involves, broadly, the retention of the shutter-closing mechanism in position for action by means of fusible fastenings arranged in the interior of the building. For instance, instead of the weights, cords, and pulleys shown herein springs may be substituted for closing the shutters, the springs being held in position at one end by connection with the fusible fastenings upon the inside of the building, so that upon the melting of said fusible fastenings the springs will be loosened and rendered ineffective; but I prefer ordinarily to effect the closing of the shutters by means of weights suspended to the outer ends of cords or chains connected with the shutters in such manner that they tend constantly to draw the shutters together over the window-opening, this system being especially adapted to be released and rendered inoperative by the severance of the fusible fastenings in the interior of the building.

In order to insure the automatic opening of the shutters should an interior fire occur when the shutters were closed, a feature of my invention consists in making the bearing-surfaces of the shutter-hinges inclined, so that they tend constantly to maintain the shutters in the open position. Thus supposing the release of the shutter-closing mechanism while the shutters are closed, the shutters will slide down and out of the stationary inclined butts of the hinges, leaving the window-space clear.

In the accompanying drawings I illustrate means for carrying out my improvements practically, although I do not wish to confine myself strictly to the identical form and construction of the parts shown, since it is obvious that various modifications may be made therein without deviating from the essential features of my invention.

Figure 1 is an elevation of a window provided with two iron shutters held open by destructible shutter-catches. Fig. 2 is a horizontal section upon plane of line *x x*, Fig. 1. Fig. 3 is an elevation similar to Fig. 1, showing the shutters closed; Fig. 4, a view similar to Fig. 2, with the shutters closed. Fig. 5 is a vertical sectional elevation in detail upon a larger scale to more clearly show the construction of the shutter-closing mechanism; Fig. 6, a partial elevation on same scale as Fig. 5 and for a like purpose; Fig. 7, an elevation of a proposed form of fusible interior fastening; Figs. 8 and 9, detail views of the exterior destructible shutter-fastenings. Fig. 10 is an enlarged detail view of one of the shutter-hinges.

The shutters A A are of ordinary construction, hinged at a a, so as to cover the window-opening B when closed.

As before intimated, the closing of the shutters may be effected by any suitable means, preferably, however, by weights C C, arranged substantially as shown in the drawings, in which the weights C C are suspended upon the inner sides of the shutters A A, the suspending cords or chains c c passing over swiveled pulleys a' a', situated near the tops of the shutters and extending thence and being secured to a fusible fastening device F, situated in the interior of the building. The weights C C may be inclosed by caps or shields a^2 a^2 to prevent undue oscillation, &c.

In order to insure the prompt action of the closing-weights C C when the shutters A A are released from or by the destruction of the catches D D, I interpose between the point b, at which the suspending cords or chains c c enter the building, and the pulleys a' a' swinging rods or brackets E, which deflect the suspending-cords c c sufficiently beyond the hinges a a when the shutters are open to insure the requisite tension upon the shutters at a proper angle with relation to the hinges, so as to positively close the shutters when released by the catches D D. These deflecting rods or brackets E are preferably provided at their outer ends with small sheaves e e, between which the suspending cords or chains pass. The rods E are pivotally secured at their inner ends by any suitable means to the window casing or sides of the window-opening, so as to be free to swing inward before the shutters as the latter close.

Stay cords or chains S are secured to the window-casing at one end and to the deflecting-rods E, near their outer ends, for the purpose of limiting the outward movement of the said rods E and relieving their inner pivoted ends from undue strain or jar when the shutters are opened. The deflecting-rods and their stays S fold easily into the space between the window-sashes and the inner sides of the shutters when the latter are closed, and as the weight-suspending cords c c are taut under all conditions there is no danger of entanglement with the stays S.

The shutters are held open by catches D D, attached to the walls of the building by pivots d d. The catches are formed with counter-weights d' d', which tend constantly to hold the catches upright and in position to engage and hold the shutters when open by means of the arms d^2 d^2. The front edges d^3 d^3 of these engaging arms are inclined substantially as shown in Fig. 9 of the drawings, so that in opening the shutters the lower edges of the latter will encounter the said inclined edges d^3 d^3, and thereby depress the engaging arms d^2 d^2 against the resistance of the counter-weights d' d' until the shutters have passed beyond, when the catches will resume their normal positions, thereby locking the shutters open. The peculiarity about these catches is that they are formed in whole or in part of material fusible at a comparatively low temperature, as set forth in the patent to Matthiessen hereinbefore referred to, any of the special forms or modifications set forth in that patent being suitable for use in connection with my means for rendering the self-closing shutter mechanism inoperative.

As shown in the accompanying drawings, the retaining-arms d^2 d^2 are connected to the body of the catch by fusible sections d^4 d^4, which readily melt under an excess of exterior heat, thereby severing the retaining-arms d^3 d^3 and permitting the shutters to close under the action of the weights C C. It will thus be seen that in the case of an exterior fire threatening the building with excessive heat, the shutters are adapted to close automatically upon the severance of the fusible portions of the catches, as heretofore. In case, however, of an excess of interior heat the interior fusible fastenings F will part, releasing the suspending-cords c c, and allow the weights C C to drop and become inoperative without changing the position of the shutters.

The fusible fastenings F may be of any desired form, the only essential feature being that the ends of the suspending-cords c shall be embedded in or held by a substance which is fusible at a temperature below that at which wood ignites.

The hinges a a may be of the class known as "inclined" or "spiral" hinges, as indicated in Figs. 1, 3, and 10, the inclination between the knuckles being such as to tend constantly to open the shutters. In this case the force of the weights C is sufficient to overcome the resistance of the upward incline of the hinges, so as to insure the closing of the shutters upon the release of the shutters from the catches.

What I claim as my invention, and desire to secure by Letters Patent, is—

1. The combination, with an exterior shutter substantially such as described, of mechanism for closing the shutter automatically when released from an exterior catch, and an interior fusible fastening by which the said automatic closing mechanism is secured in its normal position, for the purpose and substantially in the manner set forth.

2. The combination, with an exterior shutter substantially such as described, of a weight and suspender arranged to close the shutter automatically when released from catches, said suspender being connected with a fusible fastening in the interior of the building, substantially in the manner and for the purpose described.

3. The combination, with an exterior shutter and with a weight and suspender for closing the same, of a guy-rod pivotally supported at its inner end and arranged to open and close with the shutter under the influence of

the suspender and weight, substantially in the manner and for the purpose set forth.

4. The combination, with an exterior shutter and with a weight and suspender for closing the same, of a guy-rod E, pivotally supported at its inner end and arranged to open and close with the shutter under the influence of the suspender, and a stay S for limiting the outward movement of the guy-rod E, substantially in the manner and for the purpose set forth.

5. The combination, with an exterior shutter supported upon inclined hinges, which tend to throw it open by its own weight, of a weight and suspender for closing the same automatically upon the release of the exterior catch, said weight being sufficient to overcome the inclination of the hinge when the shutter is so released and said suspender being connected with a fusible fastening in the interior of the building, substantially in the manner and for the purpose set forth.

AUGUSTE A. GOUBERT.

Witnesses:
GEO. W. MIATT,
D. W. GARDNER.