No. 672,602. Patented Apr. 23, 1901.

A. GRENIER.

COMBINED FOLDING COUCH AND CHAIR.

(Application filed Jan. 29, 1901.)

(No Model.) 2 Sheets—Sheet 1.

FIG. 1.

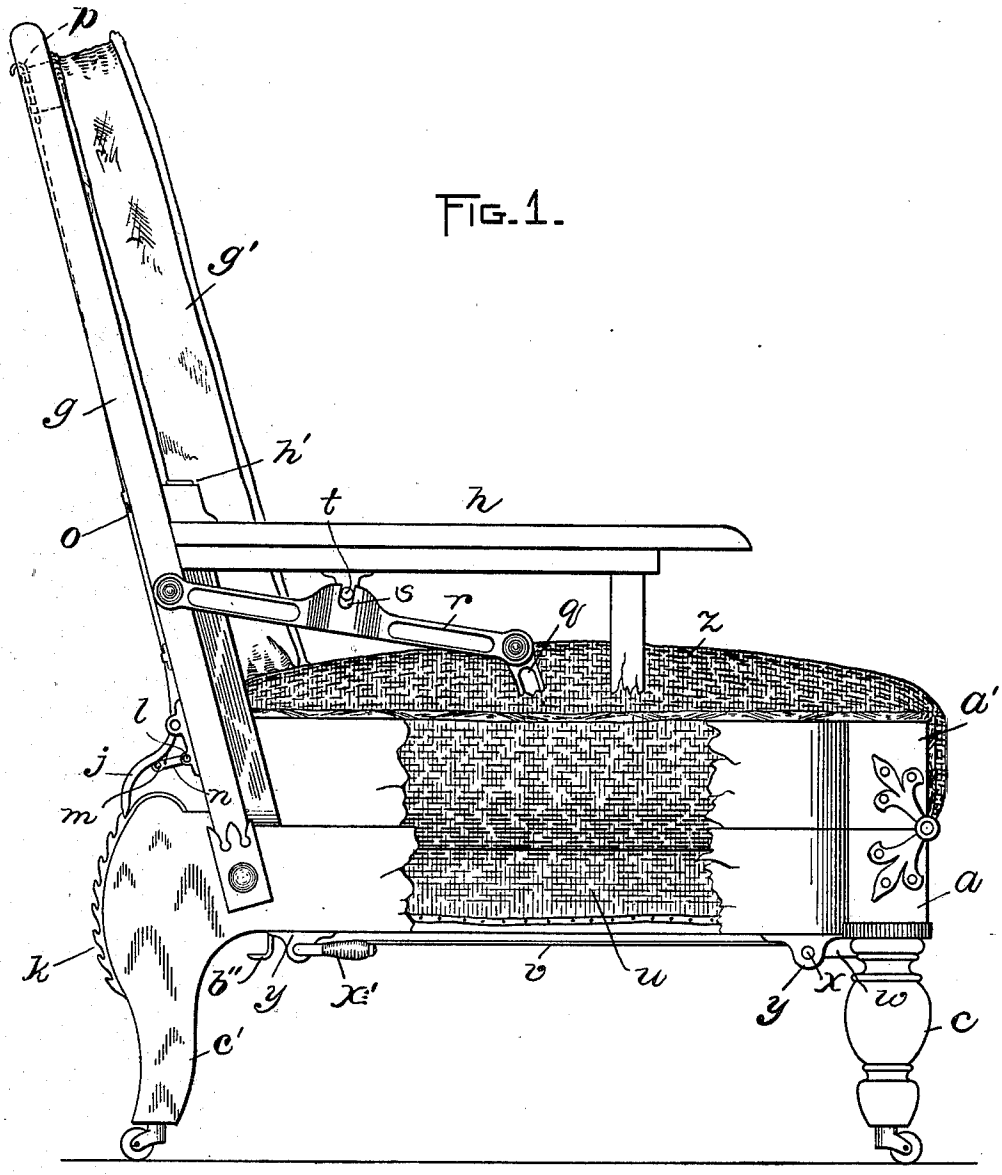

WITNESSES:

Walter R. Abell.
Alice Richmond Brown

INVENTOR:
Adolph Grenier
by Frank Parker Davis
his Atty.

THE NORRIS PETERS CO., PHOTO-LITHO., WASHINGTON, D. C

No. 672,602. Patented Apr. 23, 1901.

A. GRENIER.

COMBINED FOLDING COUCH AND CHAIR.

(Application filed Jan. 29, 1901.)

(No Model.)

2 Sheets—Sheet 2.

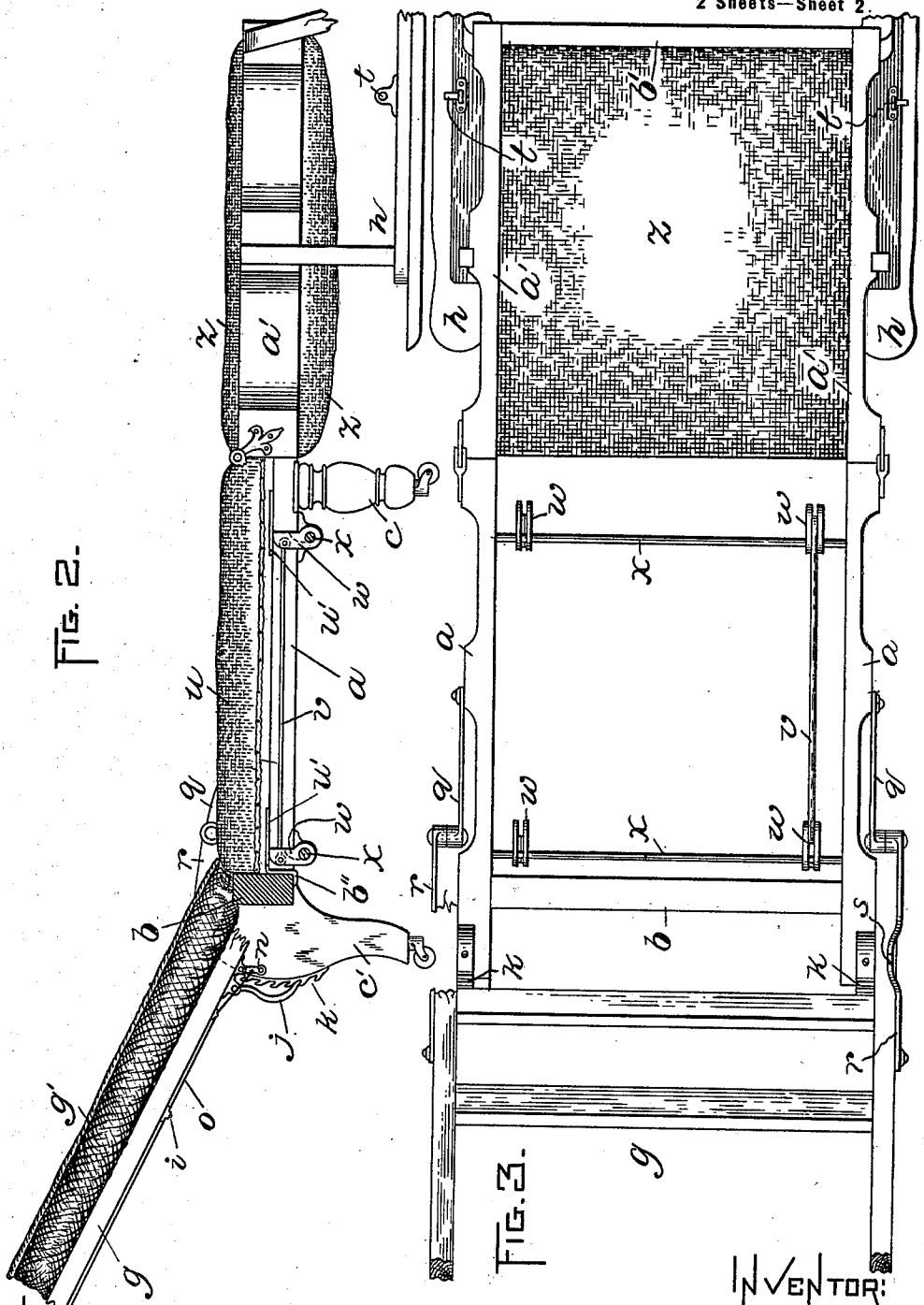

FIG. 2.

FIG. 3.

WITNESSES:

Walter L. Abell

Alice Richmond Brown

INVENTOR:

Adolph Grenier

by Frank Parker Davis

his Atty.

THE NORRIS PETERS CO., PHOTO-LITHO., WASHINGTON, D. C.

UNITED STATES PATENT OFFICE.

ADOLPH GRENIER, OF CAMBRIDGE, MASSACHUSETTS.

COMBINED FOLDING COUCH AND CHAIR.

SPECIFICATION forming part of Letters Patent No. 672,602, dated April 23, 1901.

Application filed January 29, 1901. Serial No. 45,216. (No model.)

To all whom it may concern:

Be it known that I, ADOLPH GRENIER, of Cambridge, in the county of Middlesex and State of Massachusetts, have invented certain new and useful Improvements in a Combined Folding Couch and Chair, of which the following is a description sufficiently full, clear, and exact to enable those skilled in the art to which it appertains or with which it is most nearly connected to make and use the same.

This invention relates to an improvement upon the construction of combined folding couch and chair shown in a prior patent, No. 639,554, granted to me December 19, 1899, the object of the present invention being to obviate any hindrance to the folding of the article into chair form by reason of the abutment of the raised portions of the upholstering on the two bottom sections. I accomplish this object by making the cushion of the inner section movable and providing means for elevating the same from a depressed position to a position where it is on a level with the cushion of the outer section when the latter is extended to form the couch. When the cushion of the inner section is in its depressed position, accommodation is provided in the frame of said inner section for the raised portion of the cushion or upholstering on the outer or upper section, so that the frame portion of the latter can rest solidly upon the frame portions of the inner section on all sides.

With the above-stated object in view the invention consists in certain novel features of construction and combinations of parts, the essential elements of which are recited in the appended claims and a preferred form of embodiment of which is hereinafter specifically described, and fully illustrated in the accompanying drawings, whereof—

Figure 1 represents the combination article in chair form in side elevation with portions broken away to disclose interior parts. Fig. 2 represents the article in couch form, partly in side elevation and partly in section; and Fig. 3 is a top plan view with the cushion of the inner bottom-section removed and the cushion-elevating arms down.

The frame of the inner bottom-section comprises side bars a and a rear end bar b, said frame having four supporting-legs c c', the rear two of which are equipped with curved racks k. The back g is hinged to the side bars a and provided with pivoted pawls j for engaging the said racks k to hold the back at different inclinations. The means here shown for manipulating the pawls are substantially like those shown in my prior patent, comprising the rock-rod l, mounted in bearings on the rear side of the chair-back and having arms n, with fingers m extending under the pawls, one of said arms n having attached to it a wire o, which extends through a guide i on the chair-back and connects with a pull p, mounted upon the upper part of the chair-back so as to slide up and down.

The outer bottom-section of the chair-frame comprises side bars a', hinged at their inner ends to the outer ends of the side bars a of the inner section, and an outer end bar b', said frame-section being filled by a permanent cushion z, raised above the frame on each side. Arms h are secured to the side bars a', so that when the outer section is folded over upon the inner section an arm-chair is provided, and these arms at the inner portions are provided with studs h' to rest on the floor when the outer bottom-section is extended, portions of the arms then constituting legs for the couch.

Means are provided similar to those shown in my prior patent above mentioned for locking the arms of the chair to the back, said means comprising jointed links q r, pivoted to the side bars a and to the sides of the chair-back, the bars r having notches s for the reception of laterally-extending pins t, secured to the under sides of the arms h. When the device is in chair form and the back is brought forward to the limit, the inclined surfaces of the arms r ride under the said pins t and the latter drop into the notches s.

The construction thus far described corresponds substantially with that shown in my prior patent, and the operation is the same.

In carrying out the present invention I secure a set of bearings y to the under sides of the side bars a of the inner bottom-section of the chair-frame, and I journal in these bearings a pair of rock-shafts x, one of which is equipped with a handle x', extending along the outer side of one of the side bars a, where it can be conveniently manipulated. Each

of the rock-shafts carries a pair of arms w, and the rock-shafts are operatively connected by means of a rod v, jointed to two of said arms, so that when the handle x' is manipulated all of the arms will move in unison. These arms are located at the four corners of a rectangle and are designed to support a cushion u, movable up and down within the inner frame-section. When the said supporting-arms extend horizontally, as shown in Figs. 1 and 3, the cushion u will be depressed, so as to provide a space within the top of the inner frame-section sufficient to accommodate the raised portion of the upholstering on the outer section when the latter is folded over to constitute the chair-seat. When the said supporting-arms stand vertically, as shown in Fig. 2, said cushion u will be supported on the ends of said arms in elevated position, where its top is on a level with the cushion of the outer section.

It will be seen that rearward turning of the handle x' from the position shown in Fig. 1 will cause the arms to act upon the under side of the cushion u and raise the same to the position last defined. Said cushion is preferably provided with metal plates u' to take the wear incident to the action of the supporting-arms in elevating the cushion. In order to prevent tilting of the latter by pressure imposed upon its front part, a clip b'' is secured to its under side at the rear, said clip having a portion which extends under the rear bar b of the inner frame-section.

A loose cushion g' is preferably provided for the back g and is used both when the article serves as a couch and when it serves as a chair.

It will be seen that the construction here shown and described is well calculated to fulfil the object primarily stated; but at the same time it is to be understood that the invention herein disclosed is capable of embodiment in many other forms. Therefore I do not limit myself to the particular form of means here shown, which is preferred because of its simple and practical character and its effectiveness in operation and ease of manipulation.

Having thus described my invention, what I claim as new is as follows:

1. In a combined folding couch and chair the combination of a bottom part comprising frame-sections hingedly connected, one section being foldable so as to rest above the other section and upholstered to present a raised bottom-cushion with either side up; a vertically-movable cushion in the other or inner bottom-section; and means mounted on the latter beneath said last-named cushion and operative to elevate the same to a position where it rests upon said means with its upper side on the level of one side of the cushion of the other or outer bottom-section, said means being operable to permit depression of the cushion within the inner section and accommodation therein of a raised portion of the other cushion when folded over, substantially as described.

2. In a combined folding couch and chair the combination of a bottom part comprising frame-sections hingedly connected, one section being foldable so as to rest above the other section and upholstered to present a raised bottom-cushion with either side up; a vertically-movable cushion in the other or inner bottom-section having a clip taking under the rear part of the latter; and means for elevating said last-named cushion and supporting it on a level with one side of the cushion of the other or outer bottom-section, said means being operable to permit depression of the cushion in the inner section and accommodation therein of a raised portion of the other cushion when folded over, substantially as described.

3. In a combined folding couch and chair the combination of a bottom part comprising frame-sections hingedly connected, one section being foldable so as to rest above the other section and upholstered to present a raised bottom-cushion with either side up; a vertically-movable cushion in the other or inner bottom-section; rock-shafts in bearings on the latter, one of said shafts having manipulating means; arms fastened to the shafts for elevating the cushion; and means operatively connecting the shafts.

4. In a combined folding couch and chair the combination of a bottom part comprising frame-sections hingedly connected, one section being foldable so as to rest above the other section and upholstered to present a raised bottom-cushion with either side up; a vertically-movable cushion in the other or inner bottom-section; rock-shafts in bearings on the latter, one of said shafts having manipulating means; arms fastened to the shafts for elevating the cushion; and a rod pivotally connected with an arm of each shaft to operatively connect the same, substantially as described.

In testimony whereof I have signed my name to this specification, in the presence of two subscribing witnesses, this 28th day of January, A. D. 1901.

ADOLPH GRENIER.

Witnesses:

FRANK PARKER DAVIS,

ALICE RICHMOND BROWN.