(12) INTERNATIONAL APPLICATION PUBLISHED UNDER THE PATENT COOPERATION TREATY (PCT)

(19) World Intellectual Property Organization
International Bureau

(43) International Publication Date
1 March 2007 (01.03.2007)

PCT

(10) International Publication Number
WO 2007/024878 Al

(51) International Patent Classification:
A61B 18/14 (2006 01) *A61F 2/00* (2006 01)
A61B 18/18 (2006 01) *A61N 1/00* (2006 01)

(21) International Application Number:
PCT/US2006/03281 1

(22) International Filing Date: 22 August 2006 (22 08 2006)

(25) Filing Language: English

(26) Publication Language: English

(30) Priority Data:

60/710,276	22 August 2005 (22 08 2005)	US
11/236,985	28 September 2005 (28 09 2005)	US
11/237,136	28 September 2005 (28 09 2005)	US
11/237,430	28 September 2005 (28 09 2005)	US
11/440,33 1	24 May 2006 (24 05 2006)	US
11/452,637	14 June 2006 (14 06 2006)	US
11/502,783	11 August 2006 (11 08 2006)	US

(71) Applicant: **MICRABLATE, LLC** [US/US], 8551 Re search Way, Suite 175, Middleton, Wisconsin 53562 (US)

(72) Inventors: **BRACE, Christopher,** 7318 Mockingbird Lane, Middleton, Wisconsin 53562 (US) **VAN DER WEIDE, Daniel W.,** 4138 Hiawatha Dπve, Madison, Wisconsin 53711 (US) **LAESEKE, Paul,** 24 N Webster St , Apt 3C, Madison, Wisconsin 53703 (US) **LEE, Fred, T. Jr.,** 3810 Council Crest, Madison, Wisconsin 53711 (US)

(74) Agents: **RIGGS, Charles, T. Jr.** et al , Patula & Asso ciates, P C , 116 S Michigan Ave , 14th Floor, Chicago, Illinois 60603 (US)

(81) Designated States *(unless otherwise indicated, for every kind of national protection available):* AE, AG, AL, AM, AT, AU, AZ, BA, BB, BG, BR, BW, BY, BZ, CA, CH, CN, CO, CR, CU, CZ, DE, DK, DM, DZ, EC, EE, EG, ES, FI, GB, GD, GE, GH, GM, HN, HR, HU, ID, IL, IN, IS, JP, KE, KG, KM, KN, KP, KR, KZ, LA, LC, LK, LR, LS, LT, LU, LV, LY, MA, MD, MG, MK, MN, MW, MX, MY, MZ, NA, NG, NI, NO, NZ, OM, PG, PH, PL, PT, RO, RS, RU, SC, SD, SE, SG, SK, SL, SM, SV, SY, TJ, TM, TN, TR, TT, TZ, UA, UG, US, UZ, VC, VN, ZA, ZM, ZW

(84) Designated States *(unless otherwise indicated, for every kind of regional protection available):* ARIPO (BW, GH, GM, KE, LS, MW, MZ, NA, SD, SL, SZ, TZ, UG, ZM, ZW), Eurasian (AM, AZ, BY, KG, KZ, MD, RU, TJ, TM), European (AT, BE, BG, CH, CY, CZ, DE, DK, EE, ES, FI, FR, GB, GR, HU, IE, IS, IT, LT, LU, LV, MC, NL, PL, PT, RO, SE, SI, SK, TR), OAPI (BF, **BJ,** CF, CG, CI, CM, GA, GN, GQ, GW, ML, MR, NE, SN, TD, TG)

Published:
— *with international search report*
— *before the expiration of the time limit for amending the claims and to be republished in the event of receipt of amendments*

For two letter codes and other abbreviations, refer to the "Guid ance Notes on Codes and Abbreviations" appearing at the begin ning of each regular issue of the PCT Gazette

(54) Title: AIR CORE MICROWAVE ABLATION ANTENNAS

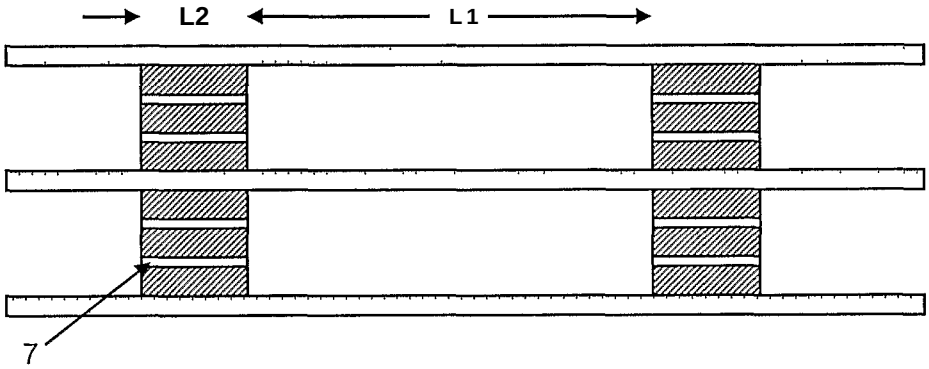

(57) Abstract: A method and device delivers microwave power to an antenna through a coaxial cable utilizing air, other gases or fluid as its dielectric core The cable includes supports made of low loss materials to keep the inner conductor centered in the cable, and defining spaces therebetween for the air, gas or fluid Channels in the supports allow the air, gas or fluid to circulate in the cable The gas or fluid may be chilled or cooled to provide an addition level of heat dissipation The device enables delivery of large amounts of power to tissue without undue heating of the feed cable or peripheral tissues, and without increasing the diameter of the feeding cable or antenna, keeping the antenna safe for percutaneous use

WO 2007/024878 A1

AIR-CORE MICROWAVE **ABLATION ANTENNAS**

Claim **of Priority**

This application claims priority to U.S. Provisional Patent Application entitled "Air-Core Microwave Ablation Antennas" filed August 22, 2005 and assigned U.S. Application Ser. No. 60/710,276; and to U.S. Non-provisional Patent Applications entitled "Segmented Catheter for Tissue Ablation" filed September 28, 2005 and assigned U.S. Application Ser. No. 11/237,136; "Cannula Cooling and Positioning Device" filed September 28, 2005 and assigned U.S. Application Ser. No. 11/237,430; "Air-Core Microwave Ablation Antennas" filed September 28, 2005 and assigned U.S. Application Ser. No. 11/236,985; "Microwave Surgical Device" filed May 24, 2006 and assigned U.S. Application Ser. No. 11/440,331; "Microwave Tissue Resection Tool" filed June 14, 2006 and assigned U.S. Application Ser. No. 11/452,637; and "Intralumenal Microwave Device" filed August 11, 2006 and assigned U.S. Application Ser. No. _____; the entire disclosures of each and all of these applications are hereby herein incorporated by reference.

Cross-Reference to Related Applications

This application is related to co-pending U.S. Non-Provisional Patent Applications entitled "Triaxial Antenna for Microwave Tissue Ablation" filed April 29, 2004 and assigned U.S. Application Ser. No. 10/834,802; "Segmented Catheter for Tissue Ablation" filed September 28, 2005 and assigned U.S. Application Ser. No. 11/237,136; "Cannula Cooling and Positioning Device" filed September 28, 2005 and assigned U.S. Application Ser. No. 11/237,430; "Air-Core Microwave Ablation Antennas" filed September 28, 2005 and assigned U.S. Application Ser. No. 11/236,985; "Microwave Surgical Device" filed May 24, 2006 and assigned U.S. Application Ser. No. 11/440,331; "Microwave Tissue Resection Tool" filed June 14, 2006 and assigned U.S. Application Ser. No. 11/452,637; and "Intralumenal Microwave Device" filed August 11, 2006 and assigned U.S. Application Ser. No. _____; and to U.S. Provisional Patent Applications entitled "Segmented Catheter for Tissue Ablation" filed May 10, 2005 and assigned U.S. Application Ser. No. 60/679,722; "Microwave Surgical Device" filed May 24, 2005 and assigned U.S. Application Ser. No. 60/684,065; "Microwave Tissue Resection Tool" filed June 14, 2005 and assigned U.S. Application Ser. No. 60/690,370; "Cannula Cooling and Positioning Device" filed July 25, 2005 and assigned U.S. Application Ser. No. 60/702,393; "Intralumenal Microwave Device" filed August 12, 2005 and assigned U.S. Application Ser. No. 60/707,797; "Air-Core Microwave Ablation Antennas" filed August 22, 2005 and assigned U.S. Application Ser. No. 60/710,276; and "Microwave Device for Vascular Ablation" filed August 24, 2005 and assigned U.S. Application Ser. No. 60/710,815; the entire disclosures of each and all of these applications are hereby herein incorporated by reference.

Field of Invention

The present disclosure relates generally to the field of tissue resection, coagulation, and hemostasis, and delivery of microwave energy to tissue. Specifically, the present disclosure relates to a method and device for the delivery of microwave power to an antenna through a coaxial cable utilizing air, other gases or fluids as its dielectric core.

Background

Use of energy to ablate, resect or otherwise cause necrosis in diseased tissue has proven beneficial both to human and to animal health. Microwave ablation and hyperthermia are well-established techniques to heat tumors to the point of necrosis. Larger zones of necrosis and shorter treatment times may be realized by applying larger powers to the antenna. Antennas used to deliver energy at microwave frequencies (300 MHz - 300 GHz) to tissue typically require a coaxial cable to feed energy to the antenna. A coaxial antenna is an antenna created from a coaxial transmission line —an electromagnetic structure whereby an inner conductor wire, a dielectric core and outer conductor wire share a common axis. Current coaxial antenna designs use a polymer [e.g., polytetrafluoroethylene (PTFE)] as the dielectric core. Small cable and antenna diameters are required to ensure the procedure is minimally-invasive and safe.

Limitations of the above techniques center on the power rating and diameter of the coaxial cable used to feed the antenna, as well as microwave losses inside the coaxial cable dielectric core. An approximately exponential relationship between cable diameter and power rating exists; that is, as cable diameter decreases, the amount of

power that cable may handle without failure decreases exponentially. Losses inside the coaxial cable dielectric core cause heat to be generated when large microwave powers are applied. This causes undue heating of the feeding cable, which causes unwanted necrosis of tissue near the feed cable and is undesirable for patient safety. Thus, the antenna input power is limited by the amount of power the feeding cable may handle without failure and by peripheral heating caused by the feed cable. This, in turn, limits the size of the zone of necrosis obtained in a given time. For this reason, current microwave ablation and hyperthermia antennas are limited in their ability to be operated at high powers and still be safe for percutaneous use.

Therefore, there is a need for a method and device for the delivery of microwave power to tissue which overcomes the above identified disadvantages and limitations of, and which represents an improvement over current coaxial antenna designs. The present disclosure fulfills this need.

Summary

This present disclosure relates to a method and device for the delivery of microwave (e.g. approximately 300 MHz and higher frequencies) power to an antenna through a coaxial cable having air, other gases (CO_2, argon, helium, etc.) or fluids as the dielectric core. The device uses small mechanical supports made of low-loss materials (e.g., PTFE) to keep the inner conductor centered in the cable. The device enables delivery of large amounts of power to tissue without undue heating of the feed cable or peripheral tissues. This is accomplished without increasing the diameter of the feeding cable or antenna, which keeps the antenna safe for percutaneous use.

The supports and antenna may contain holes or channels to allow passage of circulating gases or fluids. The advantage of using gases for this purpose is that they have a low viscosity (to pass easily through the support and antenna channels), a very low conductivity, and the circulating gas can help cool the antenna. Fluids with like characteristics may also be used. Circulation may be achieved from an external pump or compressor operatively connected with the cable. The gases or fluids may be chilled or cooled before entering the cable to provide an addition level of heat dissipation.

Accordingly, it is one of the objects of the present disclosure to provide a method and device for the delivery of microwave power to tissue.

It is a further object of the present invention to provide an improved co-axial cable for delivery of microwave energy to an antenna.

It is another object of the present invention to provide a coaxial cable utilizing air, other gases or fluids as its dielectric core.

Numerous other advantages and features of the disclosure will become readily apparent from the following detailed description, from the claims and from the accompanying drawings in which like numerals are employed to designate like parts throughout the same.

Brief Description of the Drawings

A fuller understanding of the foregoing may **be** had by reference to the accompanying drawings wherein:

Figure 1 is a longitudinal, cross-sectional view of the co-axial cable of the preferred embodiment of the present disclosure, showing the arrangement of the supports within the coaxial structure.

Figure 2 is an enlarged longitudinal, cross-sectional view of a portion of the co-axial cable of the preferred embodiment of the present disclosure, and illustrating an alternate embodiment of the supports having channels therethrough.

Figure 3 is an enlarged axial, cross-sectional view the co-axial cable of the preferred embodiment of the present disclosure, and illustrating one embodiment of the arrangement of the channels in the supports.

Figure 4 is a longitudinal, cross-sectional view of an alternate embodiment of the present disclosure.

Description of Disclosed Embodiment(s)

While the invention is susceptible of embodiment in many different forms, there is shown in the drawings and will be described herein in detail one or more embodiments of the present disclosure. It should be understood, however, that the present disclosure is to be considered an exemplification of the principles of the invention, and the embodiment(s) illustrated is/are not intended to limit the spirit and scope of the invention and/or the claims herein.

With reference to the drawings, the co-axial cable of the preferred embodiment of the present disclosure is shown. It should be understood that the cable can be of any suitable length, and the drawings figures are not intended to limit the length of the cable

to the specific length illustrated or any specific length. Instead, it should be understood that only a representative portion or section of cable is illustrated.

Figure 1 illustrates a semi-rigid coaxial cable, preferably constructed of copper or silver, utilizing air, other gas or fluid as the dielectric. The cable's inner conductor 2 is held with respect to the outer conductor 1 by supports 4 of length L2, separated by a distance Ll. The length L2 is sufficiently short (~1 mm) to be much less than the wavelength inside the cable. Ll is as long as possible (-5-10 cm) to keep the inner conductor 2 centered with respect to the outer conductor 1. Depending on the physical characteristics of the cable, however, the length Ll could be any suitable distance, for example, in the range of 0.1cm - 30 cm. The gas or fluid dielectric 3 fills the space between each support. The cable can be chosen from commercially-available standards, but can be designed with a characteristic impedance ranging from 40 to 120 Ohms.

It should be understood that the cable is connectoπzed or fixed to another feed cable on the proximal end 5, for connection with a power supply. It should also be understood that an antenna is connected or fixed to the distal end 6 of the cable in any suitable manner.

Referring now to Figure 2, an alternate embodiment of the supports 4 is illustrated. As can be seen, one or more channels 7 are provided in the supports 4, allowing for the air, gas or fluid 3 to flow between the spaces existing between each support 4. The number, pattern and size of the channels may be varied with gas or fluid flow requirements, gas or fluid viscosity or heating rate.

Figure 3 illustrates one example of the arrangement of channels 7 in the support 4. As can be seen in the embodiment illustrated in Figure 3, one or more channels (six shown) are for example equally spaced or otherwise generally arranged around the

inner conductor 2, allowing for the circulation of air, other gas or fluid within the feed cable. As should be understood, an external pump or compressor can be operatively connected with the cable to circulate the air, gas or fluid. The air, gases or fluids may be chilled or cooled before entering the cable, or otherwise during circulation, to provide an addition level of heat dissipation.

Figure 4 is a longitudinal, cross-sectional view of another embodiment of the present disclosure, depicting a hollow center conductor with holes or channels for both introduction and exhaust of cooling gasses or fluids. The return flow of cooling gasses or fluids is through the interstitial space between center conductor and co-axial outer conductor. Also indicated are the distal and proximal joints between solid center conductors and the hollow center conductor.

As can be seen in Figure 4, outer conductor 12 houses a dielectric core 13 for flow of air, other gasses or fluids, and further houses a center conductor 14, which is a hollow tube to conduct cooling gas or fluid along its length from one or more holes or channels at its proximal end 15 along its length to one or more holes or channels where the gas or fluid exits at its distal end 16. This exit 16 could also function as a venturi to allow for expansion of the gas as it changes pressure, further enhancing the cooling via the Joule-Thompson effect at the distal end of the co-axial cable. The gas or fluid is returned to the distal end through the core 13, and it exits through one or more holes or channels in the outer conductor 17. A non-conducting plug or support 18 at the distal end serves to support the center conductor, prevent the flow of cooling gas or fluid to the antenna at the distal end 20, and supports the joint between the antenna and the hollow-tube center conductor. A shaped and ported non-conducting plug or support 19 at the proximal end serves to introduce cooling gasses or fluid at 15, support the center

conductor, prevent the flow of cooling gas or fluid to the solid center conductor at the proximal end 21, and support the joint between the solid center conductor and the hollow-tube center conductor.

It is to be understood that the embodiment(s) herein described is/are merely illustrative of the principles of the present invention. Various modifications may be made by those skilled in the art without departing from the spirit or scope of the claims which follow. For example, other applications of the co-axial cable disclosed herein are contemplated.

Claims

What is claimed is:

1. A device for delivery of microwave power to an antenna, comprising:

a coaxial cable having an outer conductor and an inner conductor; and

a plurality of supports in the cable for holding and centering the inner conductor relative to the outer conductor, wherein a space is defined in the cable between adjacent supports; and

a gas or fluid dielectric filling the space between adjacent supports such that the cable utilizes air, other gas or fluid as a dielectric core;

wherein the plurality of supports each have at least one flow channel allowing for the passage of gas or fluid through each support.

2. The device of Claim 1, wherein each support defines a length, and wherein the length of each support is sufficiently short to be much less than a wavelength inside the cable.

3. The device of Claim 1, wherein each support defines a length, and wherein the length of each support is approximately 1 mm.

4. The device of Claim 2, wherein the space between adjacent supports defines a distance, and wherein the distance of the space between adjacent supports ranges from 0.1 to 30 cm.

5. The device of Claim 3, wherein the space between adjacent supports defines a distance, and wherein the distance of the space between adjacent supports is approximately 5 to 10 cm.

6. The device of Claim 1, wherein the at least one flow channel comprises six channels generally equally spaced around the inner conductor.

7. The device of Claim 1, further comprising a pump operatively connected with the coaxial cable, wherein the pump circulates the gas or fluid through the coaxial cable.

8. The device of Claim 7, wherein the gas or fluid is chilled or cooled during circulation.

9. A device for combined delivery of microwave power to an antenna and cooling of the device, comprising:

a co-axial cable having an outer conductor and an inner conductor; and

a plurality of supports in the cable for holding and centering the inner conductor relative to the outer conductor, wherein a space is defined in the cable between adjacent supports; and

a gas or fluid dielectric filling the space between adjacent supports such that the cable utilizes air, other gas or fluid as a dielectric core;

wherein at least a portion of the inner conductor comprises a hollow center allowing for the passage of gas or fluid through the hollow center.

10. The device of Claim 9, wherein the plurality of supports each have one or more flow channels allowing for the passage of gas or fluid through each support.

11. The device of Claim 10, wherein the at least a portion of the inner conductor which comprises a hollow center further comprises at least one entrance port and at least one exit port for the gas or fluid.

12. The device of Claim 11, wherein the at least a portion of the inner conductor which comprises a hollow center forms a joint at one end with a solid center portion of the inner conductor, and forms a joint at an opposite end with the antenna.

13. The device of Claim 12, wherein a non-conducting plug supports the center conductor at the joints.

14. The device of Claim 13, wherein the non-conducting plug supporting the joint at the end proximate the solid center portion includes a port in fluid communication with the at least one entrance port, and wherein the outer conductor has a port proximate the at least a portion of the inner conductor which comprises a hollow center.

15. The device of Claim 14, further comprising a pump operatively connected with the coaxial cable, wherein the pump circulates gas or fluid through the hollow center.

16. The device of Claim 15, wherein the gas or fluid is chilled or cooled during circulation.

17. A method for delivery of microwave power to an antenna, comprising the steps of:

defining spaces in a co-axial cable attached to the antenna, between an inner conductor and an outer conductor of the co-axial cable;

holding and centering the inner conductor relative to the outer conductor with a plurality of supports each having at least one flow channel allowing for the passage of gas or fluid through each support;

circulating cooling gas or fluid between the spaces in the co-axial cable; and

supplying power to the co-axial cable.

18. The method of Claim 17 wherein the co-axial cable has a hollow tube center conductor portion proximate the antenna, and wherein the method further comprises the step of circulating cooling gas or fluid through the hollow tube center conductor portion.

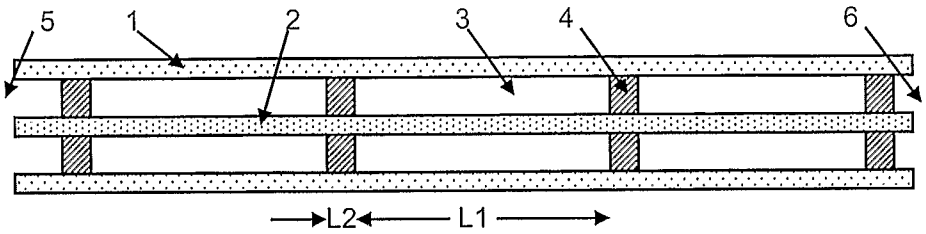

Figure 1

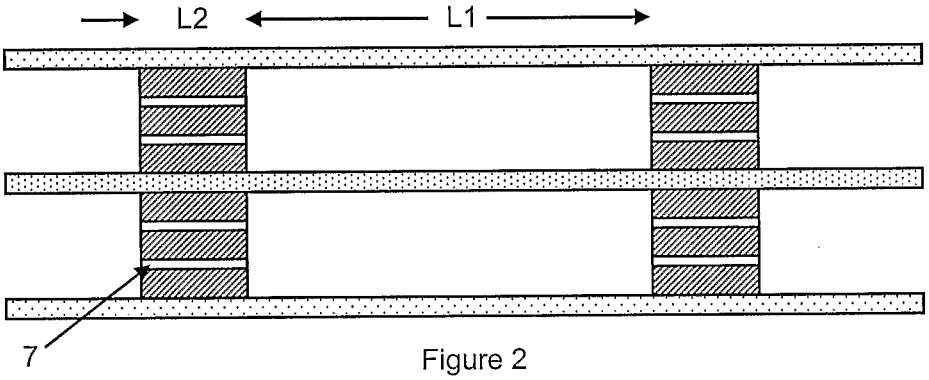

Figure 2

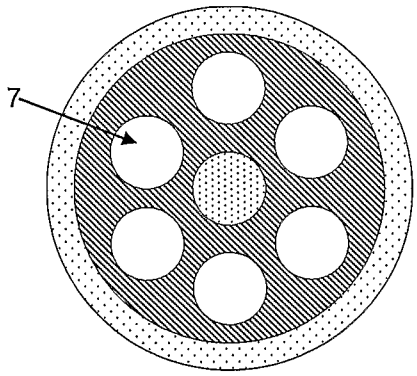

Figure 3

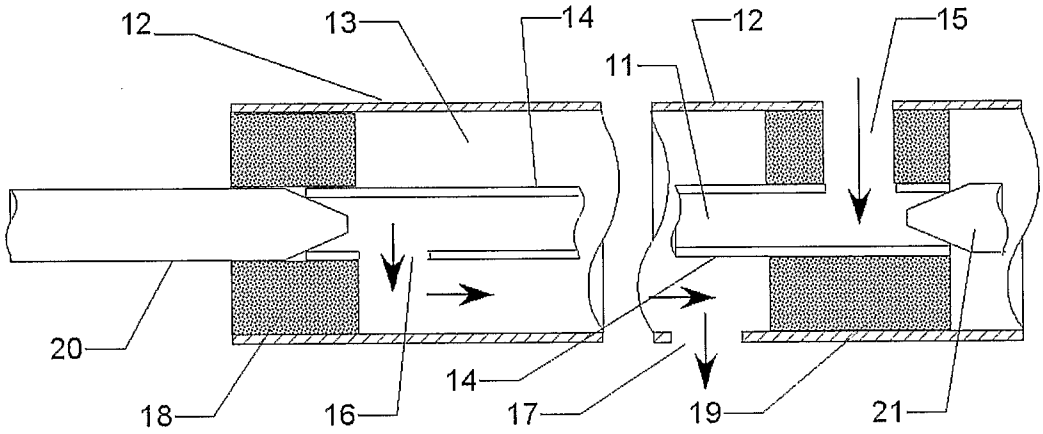

Figure 4

INTERNATIONAL SEARCH REPORT

International application No.
PCT/US06/3281 1

A. CLASSIFICATION OF SUBJECT MATTER

EPC: A61B 18/14(2007.01),18/18(2007.01);A61F 2/00(2007.01);A61N l/00(2007.01)

USPC: 606/33;607/101,102,154,156

According to International Patent Classification (IPC) or to both national classification and IPC

B. FIELDS SEARCHED

Minimum documentation searched (classification system followed by classification symbols)
U.S. : 606/33;607/101, 102,154,156

Documentation searched other than minimum documentation to the extent that such documents are included in the fields searched

Electronic data base consulted during the international search (name of data base and, where practicable, search terms used)

C. DOCUMENTS CONSIDERED TO BE RELEVANT

Category *	Citation of document, with indication, where appropriate, of the relevant passages	Relevant to claim No.
X	US 2002/0022836 A1 (GOBLE et al) 21 February 2002 (21.02.2002), see entire document.	1. 17
Y		1-11, 18
Y	US 4,074,718 A (MORRISON, JR) 21 February 1978 (21.02.1978), see entire document.	1-6
Y	US 2003/0024538 A1 (EDWARDS et al) 6 February 2003 (06.02.2003), see entire document.	7-11, 18

☐ Further documents are listed in the continuation of Box C. ☐ See patent family annex.

* Special categories of cited documents:

"A" document defining the general state of the art which is not considered to be of particular relevance

"E" earlier application or patent published on or after the international filing date

"L" document which may throw doubts on priority claim(s) or which is cited to establish the publication date of another citation or other special reason (as specified)

"O" document referring to an oral disclosure, use, exhibition or other means

"P" document published prior to the international filing date but later than the priority date claimed

"T" later document published after the international filing date or priority date and not in conflict with the application but cited to understand the principle or theory underlying the invention

"X" document of particular relevance; the claimed invention cannot be considered novel or cannot be considered to involve an inventive step when the document is taken alone

"Y" document of particular relevance; the claimed invention cannot be considered to involve an inventive step when the document is combined with one or more other such documents, such combination being obvious to a person skilled in the art

"&" document member of the same patent 6mily

Date of the actual completion of the international search 07 December 2006 (07.12.2006)	Date of mailing of tha jnt«iwMMiaI search report 25 JAN 2007
Name and mailing address of the ISA/US Mail Stop PCT, Attn: ISA/US Commissioner for Patents P.O. Box 1450 Alexandria, Virginia 22313-1450 Facsimile No. (571) 273-3201	Authorized officer Linda C.M./Dvoi alf Tel&nhoneNo. (571) 272-4764

Form PCT/ISA/210 (second sheet) (April 2005)