OPIC
Office de la propriété intellectuelle du Canada

CIPO
Canadian Intellectual Property Office

(12) (19) (CA) **Brevet-Patent**

(11) (21) (C) **2,175,608**
(22) 1990/06/26
(43) 1990/12/27
(45) 2000/03/21
(62) 2,035,457
(22) 1990/06/26

(72) Iura, Tadashi, JP
(73) Iura, Tadashi, JP

(51) Int.Cl.[6] A61G 7/00, A61G 7/16
(30) 1989/06/26 (1/165004) JP
(30) 1989/06/30 (1/170021) JP
(30) 1989/07/01 (1/169999) JP
(30) 1989/07/01 (1/170000) JP
(30) 1989/08/17 (1/211795) JP

(54) **LIT POUVANT SOULEVER LE HAUT DU CORPS**

(54) **BED CAPABLE OF RAISING THE UPPER PART OF A PERSON'S BODY**

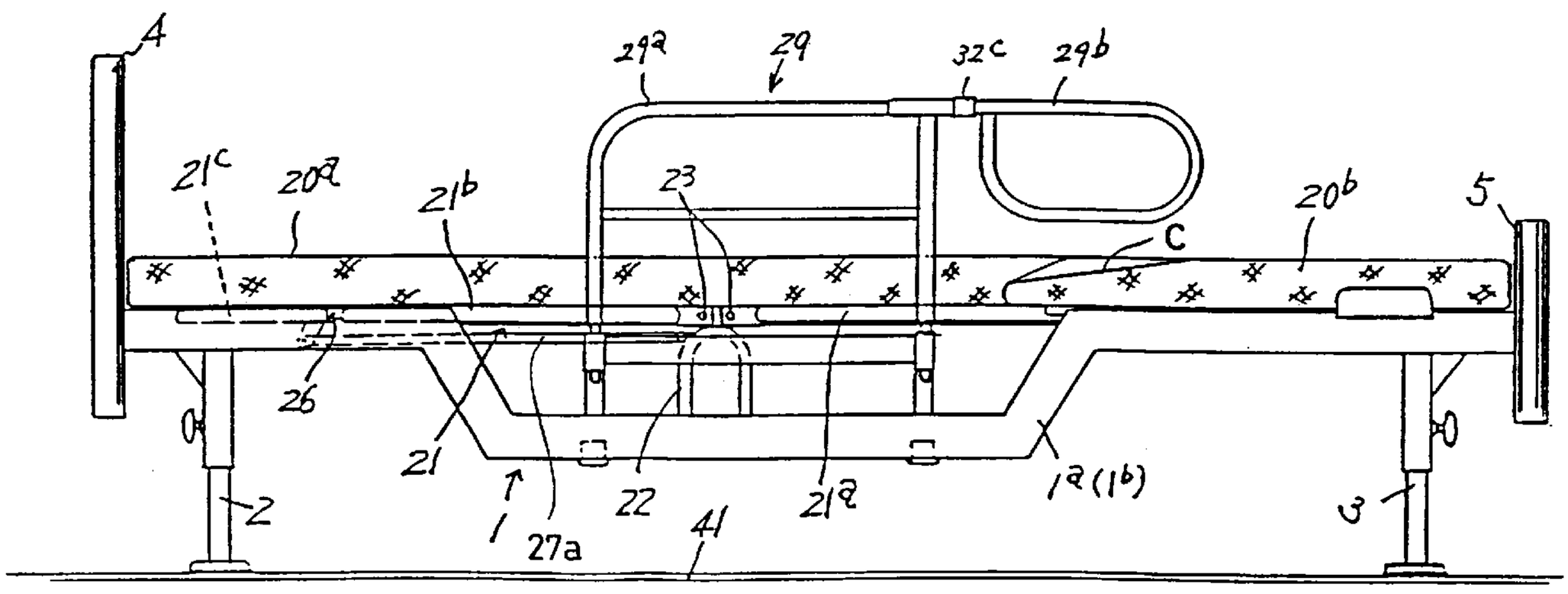


(57) A bed is provided herein which is capable of raising the upper part of a body of a physically handicapped or aged person who is laying on the bed. The bed includes a waist-supporting frame, a back-supporting frame and a head-supporting frame which is connected with a front of the back-supporting frame. The head-supporting frame is able to pivot at a joint between the head-supporting frame and the back-supporting frame so that the head-supporting frame can be bent freely at the joint. A posture change-over means is provided for selecting a pivoting state of the head-supporting frame when the back-supporting frame is raised and pivoted. The pivoting state is a first state in which the head-supporting frame is raised and pivoted on the same plane as the back-supporting frame, and a second state in which the head-supporting frame is kept horizontal, while the back-supporting frame is pivoted.

## ABSTRACT

A bed is provided herein which is capable of raising the upper part of a body of a physically handicapped or aged person who is laying on the bed. The bed includes a waist-supporting frame, a back-supporting frame and a head-supporting frame which is connected with a front of the back-supporting frame. The head-supporting frame is able to pivot at a joint between the head-supporting frame and the back-supporting frame so that the head-supporting frame can be bent freely at the joint. A posture change-over means is provided for selecting a pivoting state of the head-supporting frame when the back-supporting frame is raised and pivoted. The pivoting state is a first state in which the head-supporting frame is raised and pivoted on the same plane as the back-supporting frame, and a second state in which the head-supporting frame is kept horizontal, while the back-supporting frame is pivoted.

## (a) TITLE OF THE INVENTION

BED WITH DUALLY POSITIONABLE HEAD SUPPORT

## (b) TECHNICAL FIELD TO WHICH THE INVENTION RELATES

The present invention relates to a bed which is capable of raising the upper part of the body of a person.

This application is a division of application Serial No: 2,035,457, filed June 26, 1990, now allowed.

## (c) BACKGROUND ART

Beds are now available for use by people having problems with bodily functions, in which a part thereof supporting the upper half of a human body is pivotal so as to be moved upwardly and downwardly. By such pivotal movement, the upper half of the human body can be raised from a condition where the person is lying down on his or her back to a condition where the person is sitting up, whereby such person may eat a meal or read a book.

Beds which are used for medical treatment, and thus which have a completely different purpose from the present invention, are known for the medical treatment of the spinal cord, as disclosed in Japanese Patent Publication No. 1977/27472 and Japanese Patent No. 86424. The bed for medical treatment which is disclosed in the above-described Japanese Patent Publication No. 1977/27472 is designed to treat an unusual spinal cord in such a manner as to change the posture of a human body by pivoting somewhat rightwardly and leftwardly, moving somewhat forwardly and backwardly or twisting the foot part of the bed somewhat. Also, the bed for medical treatment

described in Japanese Patent No. 86424 is similarly designed to pivot the foot part of the bed rightwardly and leftwardly.

According, such beds used for spinal cord treatment move in such a manner that the upper half of the body part of the bed is fixed, while the foot part, that is, the lower half of the body part is moved to cure a deformation of the spinal cord.

In prior art beds, however, it has been very difficult for a physically-handicapped person or an aged person having problems with bodily functions to turn his or her body direction by 90 degrees by himself or herself and then to assume a posture such that his or her feet drop down to the floor when that person, who comes down from a bed to the floor, is held by a nurse, or is carried on his or her back.

In previous beds which were capable of raising the upper part of the body of a person, the back-supporting frame to be raised formed a plane. The person was forced to remove his or her pillow and articles which had been placed on the back-supporting frame to prevent them from falling every time he or she raised the frame.

**(d) DESCRIPTION OF THE INVENTION**

An object of a main aspect of the present invention is to provide such a bed which is provided with structure to prevent a pillow and articles which had been placed on the front area of the bed from falling when the front area was raised.

By one broad aspect of the invention provided by the present divisional application, a bed is provided which is capable of raising the upper part of a body of a physically handicapped or aged person who is lying on the bed, comprising a waist-supporting frame, a back-supporting frame, a head-supporting frame which is connected

with a front of the back-supporting frame, that head-supporting frame being able to pivot at a joint between the head-supporting frame and the back-supporting frame so that the head-supporting frame can be bent freely at the joint, and a posture change-over means for selecting a pivoting state of the head-supporting frame when the back-supporting frame is raised and pivoted, the pivoting state being a first state in which the head-supporting frame is raised and pivoted on the same plane as the back-supporting frame, and a second state in which the head-supporting frame is kept horizontal while the back-supporting frame is pivoted.

By a variant thereof, the posture change-over means has a fixed end of a rod which is connected to a protruding arm which is located under the head-supporting frame and another end of the rod fitted to a bracket which is mounted on the pivoting frame or on a bracket which is located under the back-supporting frame.

If the rod is connected to the bracket under the back-supporting frame before the back-supporting frame is raised, the head-supporting frame is held so that the head-supporting frame and the back-supporting frame form a plane. The plane consisting of these frames is erect and pivots in the same manner as the previous beds which are capable of raising the upper part of the body of a person. If the rod is connected to the bracket of the bed frame, a parallel link is made, and the head-supporting frame is always keeps horizontal, thereby preventing a pillow and other articles, which had been placed on the head-supporting frame, from falling.

The parent application, provided, by one aspect, a bed which was divided into a front bed section for receiving the upper half of the body at least above the femur and

a rear section for receiving the lower half of the body under the waist, the shape of the divided part between both bed sections when viewed from above was in the form of a circular arc traced with the centre of the forward bed section. A pivoting mechanism was provided between a fixed frame and a pivoting frame supporting both bed sections in a manner to pivot and stop the front bed section from a condition where the front bed section was moved forward and backward with respect to the fixed rear bed section to a condition where the front bed section was moved either in the right or the left direction.

The parent application provided, by another aspect thereof, a bed which was divided into a front bed section for receiving the upper half of the body at least above the femur and a rear bed section for receiving the lower half of the body under the waist, and in which a supporting frame of the front bed section was divided into a waist-supporting frame and a back supporting frame, the free end of the waist-supporting frame being pivotally provided to be moved upward so that femur-supporting part of the front bed section can be swung to a higher position. A pivoting mechanism was provided between a fixed frame and a pivoting frame in such a manner as to pivot and stop the front bed section from a condition where the front bed section was moved forward and backward with respect to the fixed rear bed section to a condition where the front bed section was moved in the direction either right or left. An actuating mechanism was provided for moving the front end of the waist-supporting frame upward so as to move at least the femur-supporting part of the front bed section upward when the pivoting frame was pivoted by the deriving force of the pivoting mechanism.

The parent application provided, by yet another aspect thereof, a bed which was divided into a front bed section for receiving the upper half of the body at least above the femur and a rear bed section for receiving the lower half of the body under the waist, and in which the supporting frame of the front bed section was divided into a waist-supporting frame and a back-supporting frame, the top of the back-supporting frame being pivotally provided to be moved upward so that the back receiving part of the front bed section can be bent. A pivoting mechanism was provided between a fixed frame and a pivoting frame is such a manner as to pivot and stop the front bed section from a condition where the front bed section was moved forward and backward with respect to the fixed rear bed section to a condition where the front bed section was moved either in the right or in the left direction. A bending mechanism was provided to stand the back-supporting frame up when the pivot frame was pivoted by the driving force of the pivoting mechanism.

The parent application provided, by a still further aspect thereof, a bed which was divided into a front bed section for receiving the upper half of the body at least above the femur and a rear bed section for receiving the lower half of the body under the waist, and in which the supporting frame receiving the front bed section was pivoted when viewed from above and was adapted to move sideward and stop the front bed section. A collision preventive mechanism was provided for upward and downward separating the front bed section from the rear bed section when the front bed section was pivoted so as to prevent the end faces of the both bed sections from colliding with each other.

The parent application provided, by yet a further aspect thereof, a bed handrail for use in combination with the right and left sides of a bed which was divided into a front bed section for receiving the upper half of the body at least above the femur and a rear bed section for receiving the lower half of the body under the waist, for allowing the front bed section to be pivotable when viewed from above with respect to the rear bed section, and whose rear part can be set toward the inside of the bed.

## (e) DESCRIPTION OF THE FIGURES

In the accompanying drawings,

FIG. 1 is a side view of the whole of a bed;

FIG. 2 is a plan view of the whole of a bed;

FIG. 3 is a side view of a pivoting frame;

FIG. 4 is a side view of FIG. 3;

FIG. 5 is a plan view of FIG. 3;

FIG. 6 is a side view of a principal part of an actuating mechanism for actuating the pivoting frame;

FIG. 7 is a plan view of the principal part;

FIG. 8 shows how a posture change-over means operates;

FIG. 9 is a side view of a handrail;

FIG. 10 is a side view showing a pivoting mechanism of the handrail;

FIG. 11 is a front view of a principal part showing how the handrail pivots;

FIGS. 12, 13, 14 and 15 are plan views showing the pivoting method of the pivoting frame actuating mechanism;

FIGS. 16, 17, 18, 19 and 20 are side views of a principal part showing the operation and the method of the bending actuation of a front bed section;

FIG. 21 is a side view of the whole bed in the raised state;

FIG. 22 is a side view of the bed when a person on the bed is in a posture to take a meal or when the bed is in the pivoting start position; and

FIG. 23 is a side view showing a condition that the pivoting frame has completed pivoting thereof and then a person goes down and stands on the flor, or a condition that a person is held by a nurse or carried on his or her back.

## (f) AT LEAST ONE MODE FOR CARRYING OUT THE INVENTION

As seen in the drawings, a fixed frame 1 of a bed is supported by front feet 2 and rear feet 3. When viewed from the side 4, and when viewed from above the right side

frame 1a and left side frame 1b are connected by joining frames 1c. Parts 4 and 5 indicate a front board and a rear board, respectively.

A pivoting frame 6 of the bed is fixed to a pivoting plate 8 which is held by upper and lower bearings between a lower fixed ring 7a fixed to the joining frame 1c located in the descending center part of fixed frame 1 and an upper fixed ring 7b integrally fixed to the lower fixed ring 7a so that the pivoting plate 8 can pivot freely. The pivoting frame 6 comprises side frames 6a and 6b provided on the left and right sides of the bed in the longitudinal direction, a tie frame 6c, a tie frame 6c for connecting to the pivoting plate 8, and a mounting frame 6d to which the tie frame 6c is connected.

The above-mentioned pivoting frame has a pivoting mechanism as described below. Fixed cams 9a and 9b are fixedly secured on the right and left areas on the upper face of the fixed ring 7b in the protruded state. The fixed cams 9a and 9b have cam grooves A and B, respectively, to displace the mating part inward from the back toward the front.

The pivoting frame 6 is provided with an integrally fixed transmission mounting frame 16 having a rectangular shape when viewed from above. A motor 10 is mounted in this frame 16 with the drive output shaft 10a set in the longitudinal direction. A screw shaft 12 is connected to the shaft 10a in the longitudinal direction through a friction transmission joint 11 also serving as a shock absorber. The screw shaft 12 is received on bearings of the transmission mounting frame 16 so that the shaft can freely pivot. A screw cylinder 13 is screwed onto the screw shaft 12 and is provided with shafts 14 and 15 on the right and left sides to prevent the shaft 13 from rotating. The shafts 14 and

15 are provided with rollers 17 which roll on the right and left frames 16a and 16b of the frames 16, keeping contact with them.

A lateral frame 18 has holes 18a and 18b on the right and left ends, to one of which cam pin 19 is inserted. When the pin 19 is inserted into the hole 18a or 18b on the lateral frame 18 and the motor is started to move the screw cylinder 13 forward, the lower end of the pin 19 is fitted into the cam groove A (cam 9a) or B (cam 9b) and pivots the pivoting frame 6 rightward or leftward through the transmission mounting frame 16 in corporation with the motor 10. Rotating the motor 10 reversely to move the screw cylinder 13 backward draws out the pin 19 backward from the cam groove A or B, and the cam action obtained in this time causes the pivoting frame 6 to pivot in the reverse direction to the above-mentioned direction to return to its origin. The pivoting angle of the pivoting frame 6 varies depending on the displacement angle and length of the cam grooves A and B. According to this invention, as provided by the present divisional application, the cam grooves are designed so that the friction transmission joint 11 functions to stop the pivoting frame 6 when it pivots approximately 90°.

The pivoting frame 6 is connected with the front bed supporting frame 21 supporting the front bed section 20a for receiving the upper part of a person's body above the femur as follows: the pivoting frame 6 is provided with a reverse U-shaped protruding frame 22 which has brackets 24 and 25 to fit the waist supporting frame 21a and the back supporting frame 21b, respectively, with pins 23, where the base sides of the supporting frames 21a and 21b are secured so that they can pivot freely. Their moving ends are properly supported by the pivoting frame 6 so that the frames are kept

substantially horizontally. The head-supporting frame 21c is fitted to the front of the back-supporting frame 21b so that the head-supporting frame 21c can pivot freely with the aid of a pin 26. The front of a protruding arm 57 under the head-supporting frame 21c is connected to the bracket 22a on the protruding frame 22 through a rod 27a. When the back-supporting frame 21b is pivoted upward, only the head-supporting frame 21c is kept in the horizontal position. When the base of rod 27a is connected to the bracket 28 which is fixed on the back-supporting frame 21b, the head-supporting frame 21c is not kept horizontal when the back-supporting frame 21 is pivoted; it moves together with the back-supporting frame 21b. Thus, a position change-over means 27 for changing the position of the head-supporting frame 21c by changing the mounting position of the rod 27a, functions between the back-supporting frame 21b and the head-supporting frame 21c.

Cylinders 30 are provided on the four corners of the pivoting frame 6 to attach handrails 29. The handrails 29 comprise a gate-shaped fixed handrail 29a sloped diagonally somewhat downward by means of pivoting stopper 29d and 32b which is provided on the boss 29c and the pivoting handrail 29b at the end face of the insertion shaft 32, respectively. Part 32c indicates a cover of the stoppers.

The front bed section 20a, which is a mat for normal bendable bed, is placed on the upper surface of the front bed supporting frame 21 provided as described above on the pivoting frame 6, and the rear end of the front bed section 20a is formed in a circular arc traced with the pivoting center of the pivoting frame 6 as a center.

The rear bed section 20b is placed on the upper surface on the rear side of the fixed frame 1, the front end face is formed in a circular arc traced with the pivoting center of the pivoting frame 6 as a center. Projections C and D on the right and left sides of the bed 20b, which have a concave shape when viewed from above, are inclined in such a manner that the closer to both edges they reach, the thinner they become than the other part.

The pivoting mechanism of the waist supporting frame 21a and the back supporting frame 21b which is pivotally mounted through the projection frames 22 on the pivoting frame 6 will be explained hereinafter. On the underside of the supporting frames 21a and 21b, cam rollers 35 and 36 through brackets 33 and 34 are rollingly provided through laterally mounted shafts. Also, a cam 37 abutting on the cam roller 35 is fixedly secured on the right side of the lateral frame, the cam 33 being integral with the screw cylinder which is inserted into cylinders 30 from above and a pivoting handrail 29b which is inserted into the handrail 29a in the longitudinal direction through a boss 29c which is integrally secured on the rear upper part of the fixed handrail 29a and held with a screw 31 and a drawing-out preventive groove 32a cut on an insertion shaft 32. The pivoting handrail 29b is made of pipe formed in substantially elliptical loop and is designed so that it can be set in two positions, i.e. in the hanging-down position and in the slanting position (at which it is held inward and slightly slanting), by means of pivoting stoppers 29d and 32d which are provided on the boss 29c and the pivoting handrail 29b at the end face of the insertion shaft 32, respectively.

A cylinder 32c is a safety cover for the stopper section. An ordinary bendable bed mat is placed on the upper surface of front bed section 20a of the front bed supporting frame 21 set on the pivoting frame 6 as described above, and the rear edge of the front bed section 20a is formed in a circular arc traced with the pivoting center of the pivoting frame 6 as a center.

The rear bed section 20b is placed on the upper surface on the rear side of the said fixed frame 1, the front edge is formed in circular arc traced with the pivoting center of the pivoting frame 6 as a center. The projections C and D on the right and left sides of the bed section 20b, which have an arched edge when viewed from above, are inclined gradually lower than the other surfaces towards the ends.

The pivoting mechanism of the waist supporting frame 21a and the back-supporting frame 21b which are mounted on the pivoting frame 6 through the protruding frame 22 so that they can pivot will now be explained. Under these supporting frames 21a and 21b, cam rollers 35 and 36 are fitted through brackets 33 and 34, respectively, so that they can roll through lateral shafts. Also, a cam 37 with which the cam roller 35 is put into contact is fixed on the right side of the lateral frame 18 integrally secured to the screw cylinder 13, and a cam 38 with which the cam roller 36 is put into contact is fixed on the left side. When the screw cylinder 13 is moved forward by rotating the screw shaft 12 by the motor 10, the cam roller 36 is pushed by the vertical front face of the cam 38 to cause the back-supporting frame 21b to pivot gradually backward. Almost simultaneously, the cam roller 35 is gradually moved up by the cam 37 to cause the rear side of the waist-supporting frame 21a to pivot somewhat upward. Then, a few seconds

before the condition shown in Fig. 19 occurs, the cam pin 19 inserted into the hole 18a or 18b at the end of the said lateral frame 18 is fitted into the cam groove A or B of the fixed cam 9a or 9b on the side where the pin is located. After this, the screw cylinder 13 moves forward, and when the pin reaches the displacing zone of the cam groove, the pivoting frame 6 starts pivoting to the left or right. When the pivoting frame pivots approximately 45°, the back-supporting frame 21b is turned down slightly. At the same time, the waist-supporting frame 21a gradually becomes sharp in inclination while the pivoting frame 6 further pivots. Then, when the pivoting frame 6 reaches the pivoting limit of approximately 90°, the back supporting frame 21b is set in the vertical position, and the waist supporting frame 21a returns to the horizontal position. The positional relations between cams and pins or cam rollers and the shape of cams are designed so that the above-mentioned movements can be obtained.

A switch box 39 to operate motor 10 is provided with a cord so that a handicapped person, an aged person on the bed or a person who looks after him/her can operate it from any position and change the switch to rotate the motor 10 in the normal or reverse direction, i.e. to change the rotation direction of the screw shaft 12 to move the screw cylinder 13 forward or backward.

A slide member 40 made of leather or synthetic rubber is applied to the arched face of the front bed section 20a (convex edge) or the rear bed section 20b (concave edge) or to both the faces to pivot the section 20a smoothly.

The mechanism of the above-mentioned embodiment will now be described below.

A handicapped person or an aged person is laying on the bed with the upper half of the body above the waist on the front bed section 20a and with the legs on the rear bed section 20b. When he/she wants to raise his/her upper part of his/her body from the laying position to take a meal, to come down on the right side (left side with respect to the person laying on his/her back) floor 41 or to be held or carried on his/her back by a person standing at the right side of the bed, the cam pin 19 should be inserted into the left hole 18a of the lateral frame 18 beforehand as shown in Figs. 6 or 7. The screw shaft 12 should be rotated counterclockwise by the motor 10 to move the screw cylinder 13 forward. Then, first the cam roller 35 fitted to the waist supporting frame 21a through the bracket 33 is moved up by the cam 37. At the same time, the cam roller 36 fitted to the back-supporting frame 21b through the bracket 34 comes into contact with the front face of the cam 38, so that the supporting frames 21a and 21b are pivoted as shown in the operation processes shown in Figs 16 to 18. The person laying on the bed is placed into a position to take a meal or read a book as shown in Figs 21 and 22. To simply raise the person on the bed to such a position, cam pin 19 need not be inserted into the hole 18a or 18b. Next, when the motor 10 is further rotated to move the screw cylinder 13 forward, cam pin 19 comes into contact with the displacing zone in the cam groove A of the left fixed cam 9a provided on the bed fixed frame 1. The frame 16 on which the motor 10 is mounted and the pivoting frame 6 which is integrally fixed to the frame 16 pivot to the right (in the direction of arrow E) with respect to the fixed frame 1 from the state shown in Fig. 12 to the state shown in Fig. 15 through the states shown in Figs. 13 and 14. In the state shown in Fig. 14, on the way of the pivoting movement,

cam rollers 35 and 36 and cams 37 and 38 are located as shown in Fig. 18. As the screw cylinder 13 is moved further forward, the pivoting frame 6 and the driving section including the motor 10 pivot approximately 45° from the state shown in Fig. 14 to the state shown in Fig. 15, i.e., they have pivoted approximately 90° from the initial position. During the second pivoting movement of 45°, the positional relation between cam rollers 35 and 36 and cams 37 and 38 is changed from the state shown in Fig. 18 to the state shown in Fig. 20. While the back-supporting frame 21b pivots slightly backward, the rear side of waist-supporting frame 21a becomes slightly higher simultaneously. After this, the back-supporting frame 21b becomes erect again. At the same time, the waist-supporting frame 21 is set to the horizontal state, i.e., the laying person is finally set to the position shown in Fig. 23 through the position shown in Fig. 22.

The bed can be returned from the position shown Fig. 23 to the original horizontal position by rotating the motor 10 clockwise (in the reverse direction to the above-mentioned direction). In this case, completely reverse operation to the above-mentioned is performed, so that the person is returned to the laying position. To move the pivoting frame 6 reversely so that the person on the bed comes down at the opposite side of the bed, the clamp pin 19 should be inserted in the other hole 18b to fit it into the cam groove B of the fixed cam 9b.

Accordingly, since the waist supporting frame 21a and the back supporting frame 21b are operated as shown in Figs. 18 to 20 as stated above during the operating processes of the front bed section 20a from Figs. 22 to 23, the femur of a person on the

bed near the waist supported on the front of the waist-supporting frame 21a is slightly lifted to prevent his/her feet from being rubbed over the fixed rear bed section 20b while the front bed section is pivoting. This prevents the foot opposite to the pivoting direction from twisting by being caught by the fixed rear bed section 20b. At this time, if only the waist-supporting frame 21a is lifted, the person on the bed is excessively bent and would be in pain. Therefore, this bed is designed so that the waist-supporting frame 21a returns to the horizontal posture and becomes erect again after the back-supporting frame 21b turns slightly backward. Accordingly, a person laying in the position shown in Fig. 22 can raise his/her back and, finally, turn to the side of the bed to bring his/her feet on the floor as shown in Fig. 23. Then, the pivoting handrails 29b at the rear of the handrails 29 are operated as shown in Fig. 11 to pivot inward from above and fixed with the stoppers. The pivoting handrails 29b come near the right and left hands of the person who wants to stand up from the posture shown in Fig. 23. Then, he/she can stand up easily by grasping the pivoting handrails 29b and sliding his/her body apart from the bed with the strength of his/her arms.

Also, when the end of the rod 27a has been connected to the bracket 22a of the protruding frame 22, the head supporting frame 21c is kept horizontal. Therefore, as shown in Figs. 22 and 23, the pillow 42 on the head supporting frame 21c is kept in place without falling even if the back supporting frame 21b is raised and pivoted.

As explained above, in this invention, as provided by the present divisional application, a head-supporting frame is connected to the front of a back supporting frame so that the head-supporting frame can be bent freely at the joint. A posture change-over

means is designed so that the position of the head-supporting frame when the back-supporting frame is raised and pivoted can be selected from two positions, namely, a position where the head-supporting frame is kept horizontal and a position where the head-supporting frame and the back-supporting frame form one plane. Therefore, in the latter case, the bed can be used in the same manner as previous beds which are capable of raising the upper body. In the former case, a user can raise his/her upper body without dropping the pillow or articles even when he/she raises his/her back.

# CLAIMS

1. A bed which is capable of raising an upper part of a body of a physically-handicapped or aged person who is lying on the bed, comprising a waist-supporting frame; a back-supporting frame; a head-supporting frame which is connected with a front of said back-supporting frame, said head-supporting frame being able to pivot at a joint between said head-supporting frame and said back-supporting frame so that said head-supporting frame can be bent freely at the joint; and a posture change-over means for selecting a pivoting state of said head-supporting frame when said back-supporting frame is raised and pivoted, said pivoting state being a first state in which said head-supporting frame is raised and pivoted on the same plane as said back-supporting frame, and a second state in which said head-supporting frame is kept horizontal while said back-supporting frame is pivoted.

2. The bed according to claim 1, which is capable of raising the upper part of a body of a physically handicapped or aged person who is lying on the bed, wherein said posture change-over means has a fixed end of a rod which is connected to a protruding arm which is located under said head-supporting frame, and another end of said rod which is fitted to a bracket which is mounted on said pivoting frame or on a bracket which is located under said back-supporting frame.

Fig. 1

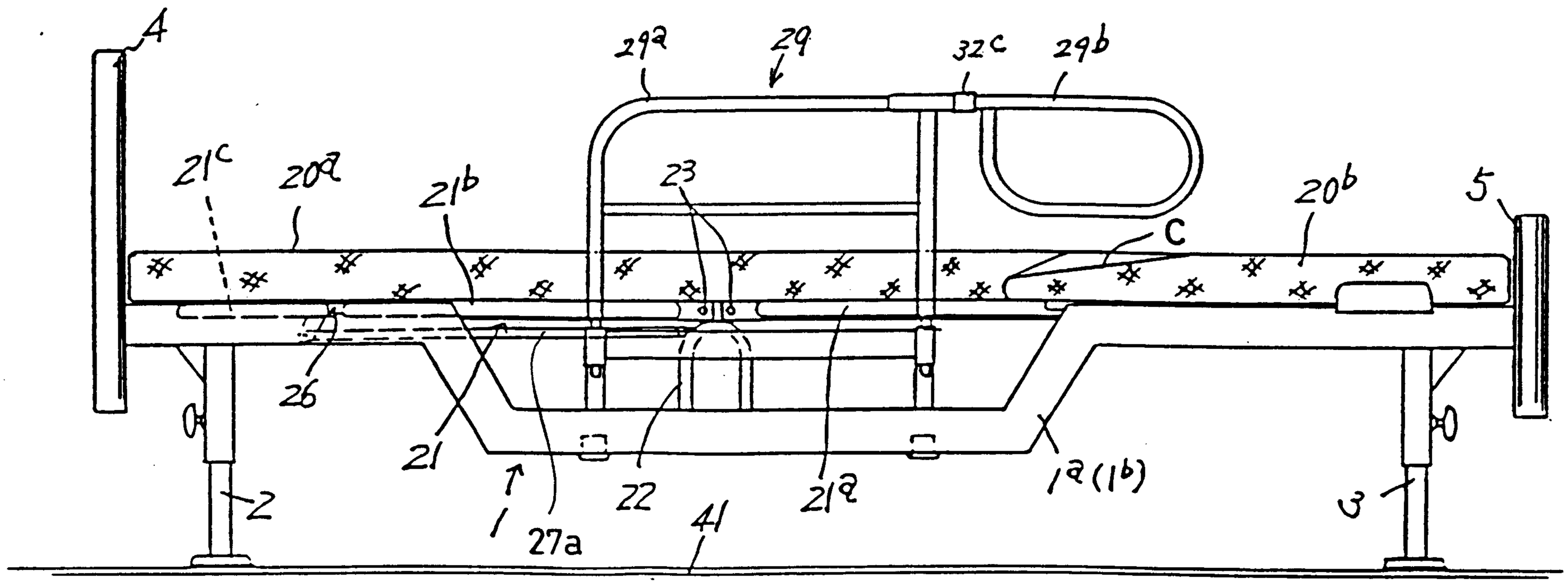


2175608

Marcus + Associates

Fig. 2.

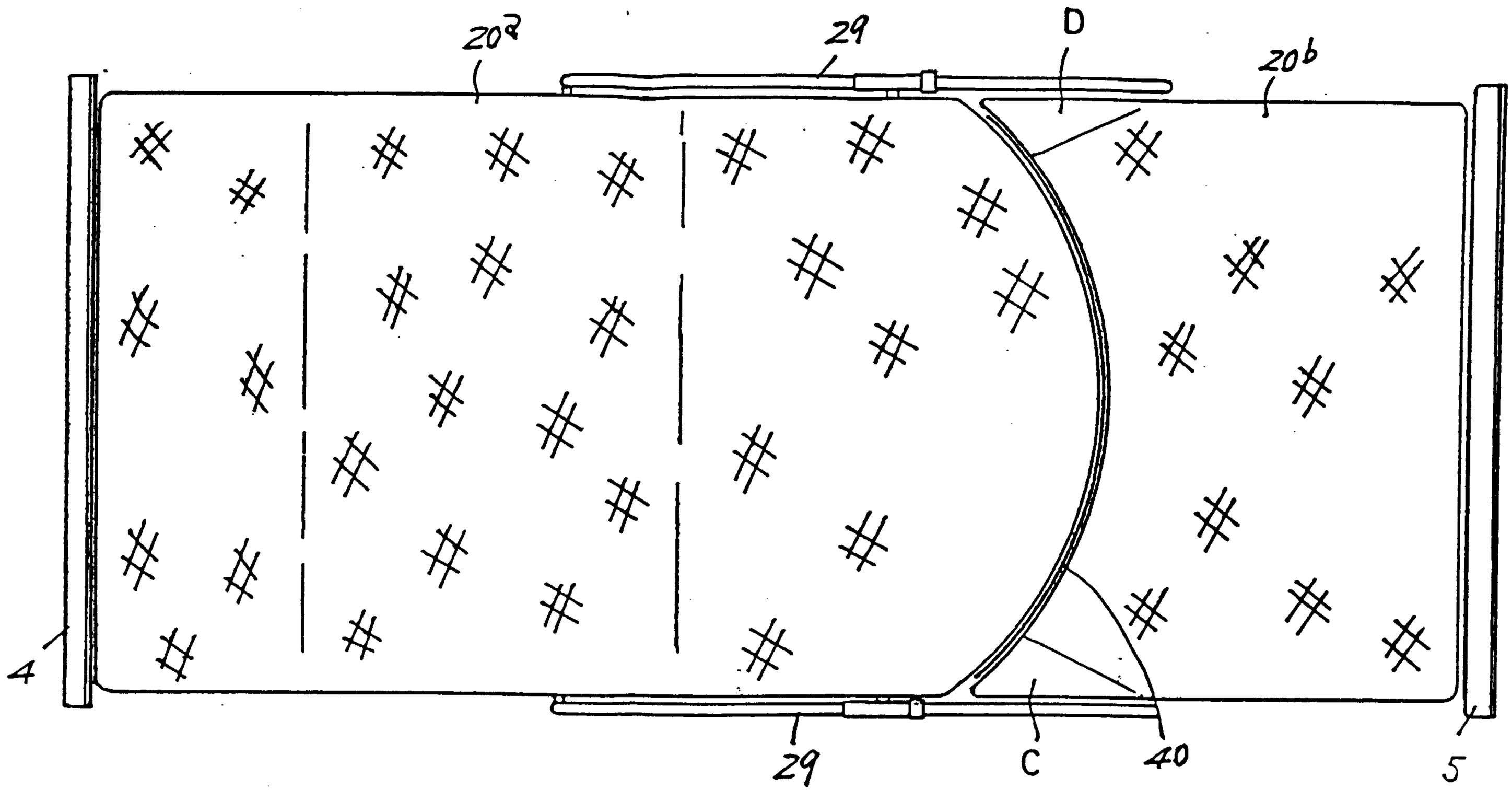


2175608

Marcus + Associates

Fig. 3

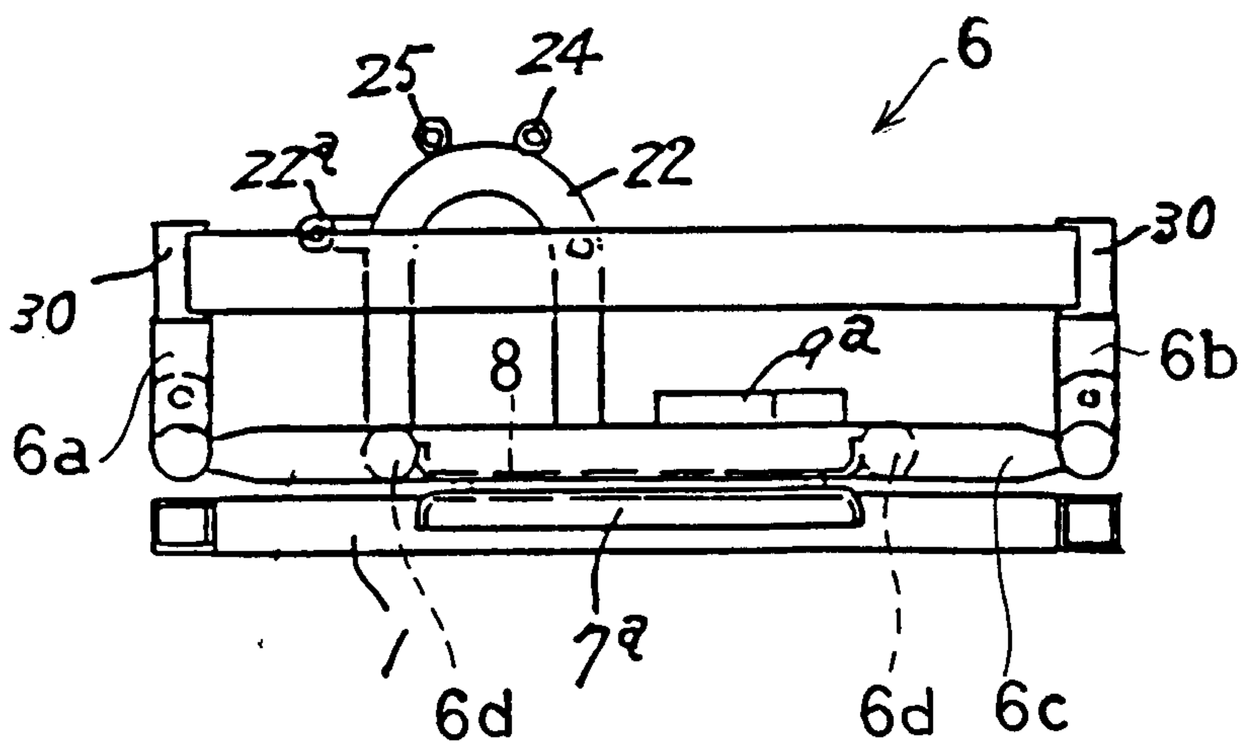


Fig.4

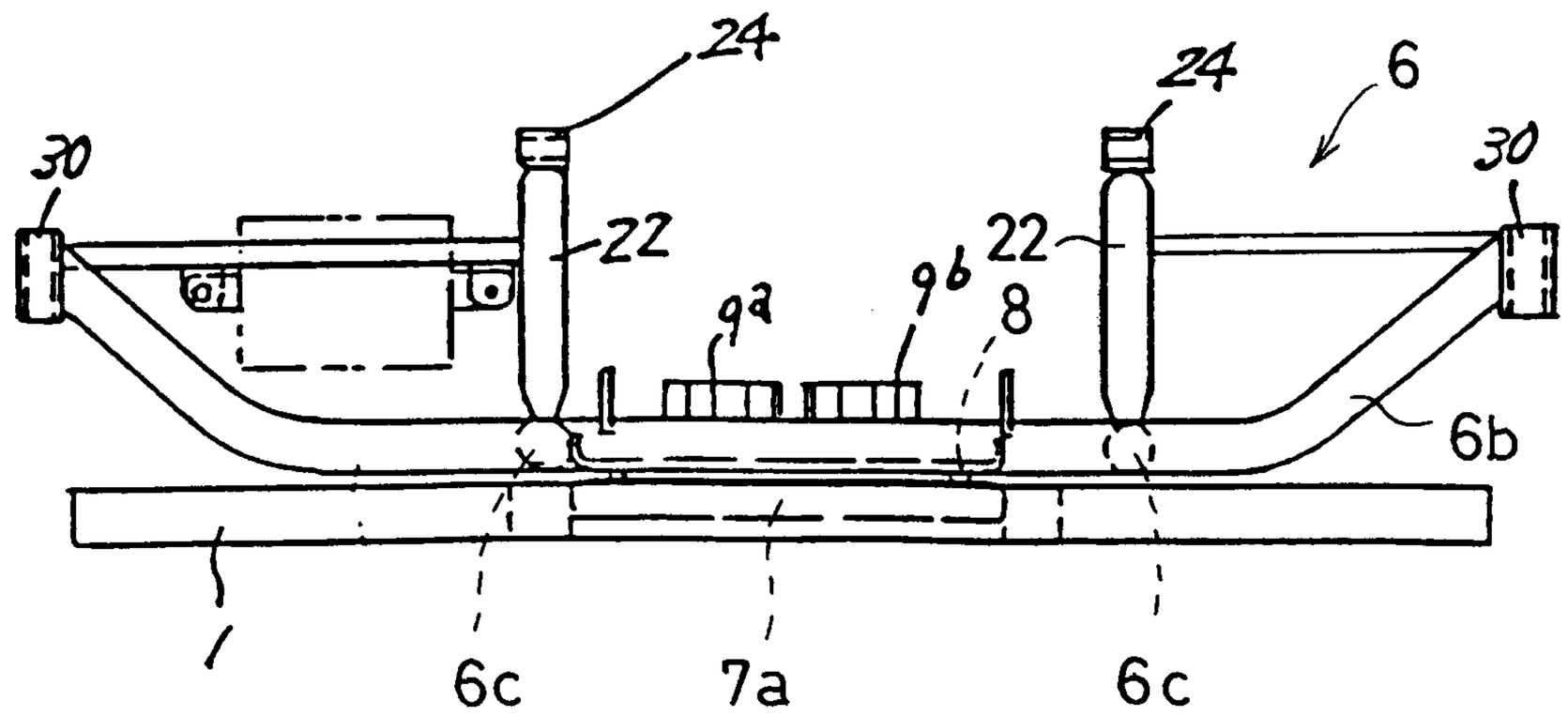


2175608

Marcus + Associates

Fig. 5

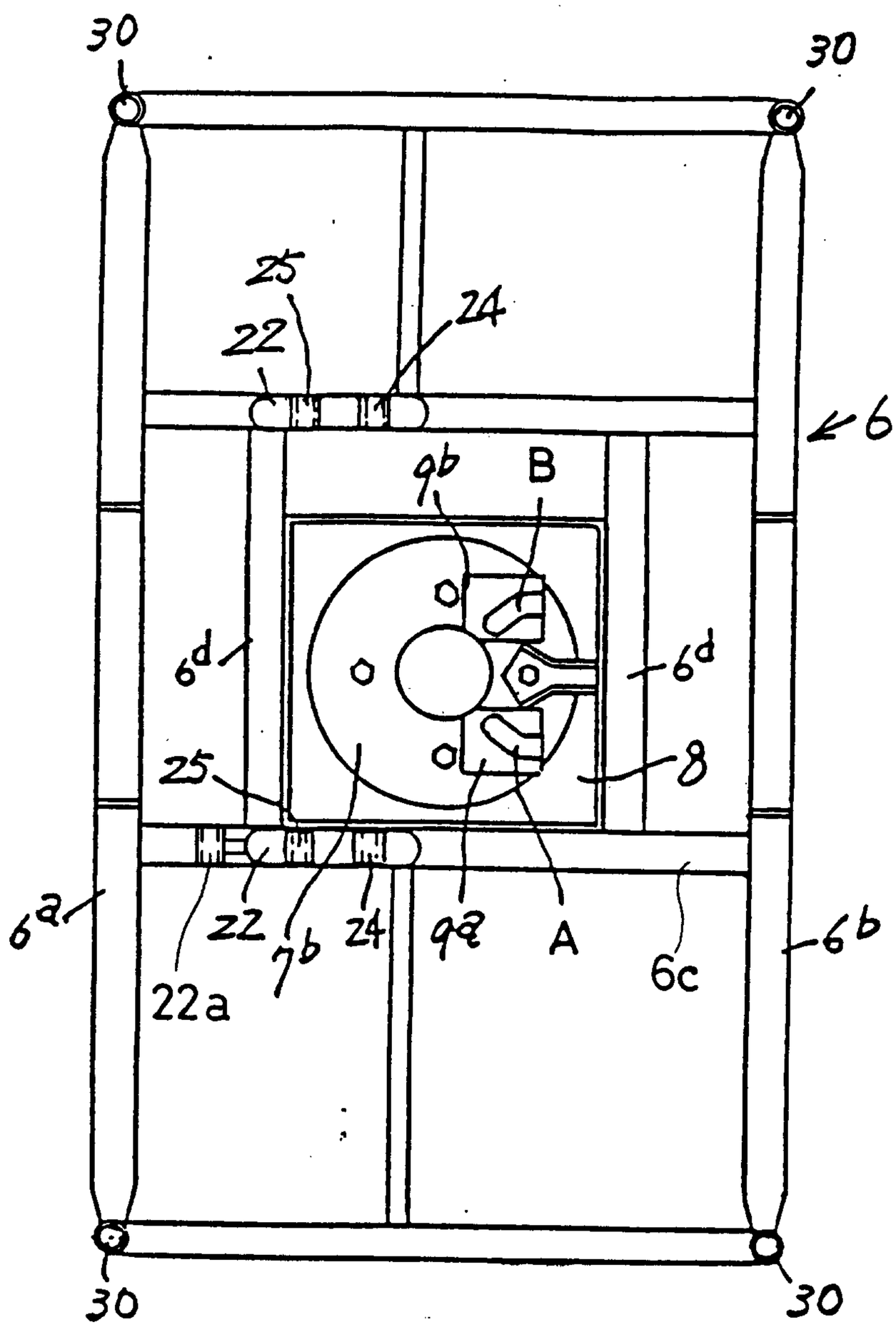


Marcus + Associates

Fig. 6

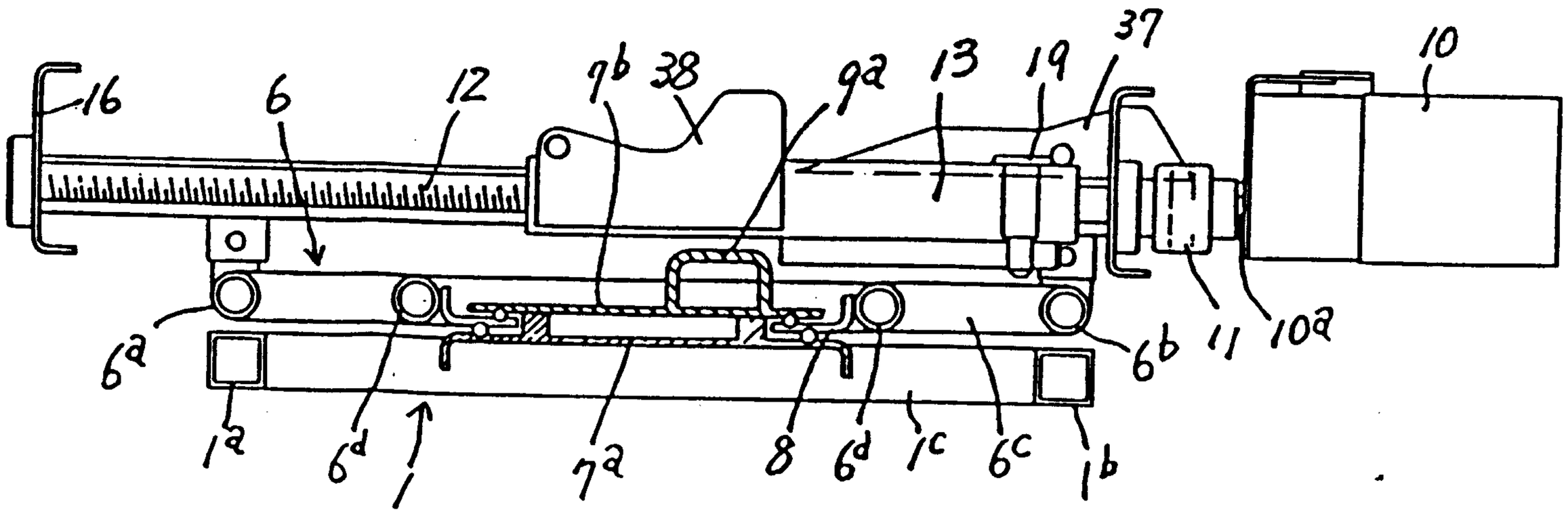


2175608

Marcus + Associates

Fig. 7

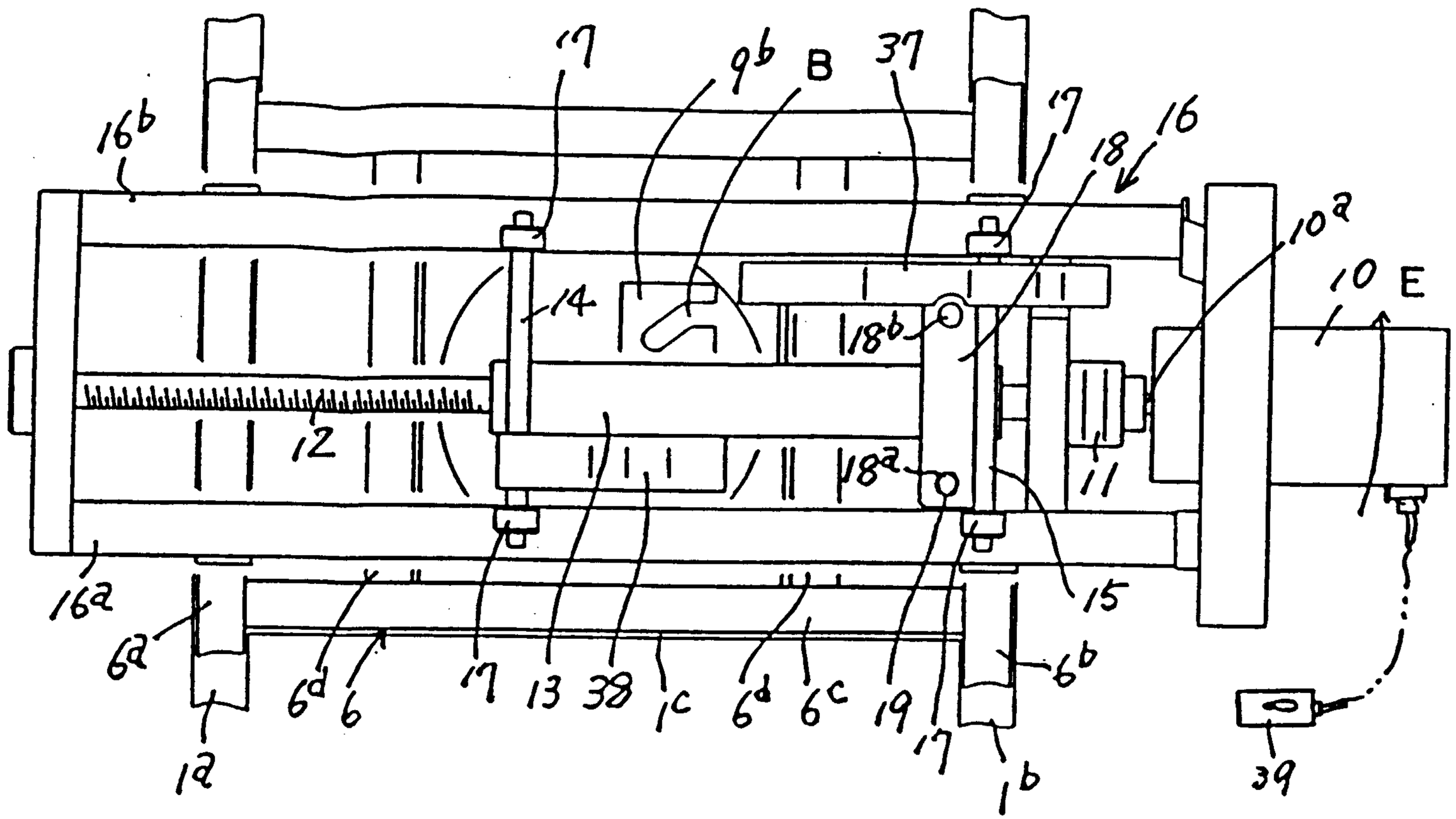


Marcus + Associates

21756608

Fig. 8

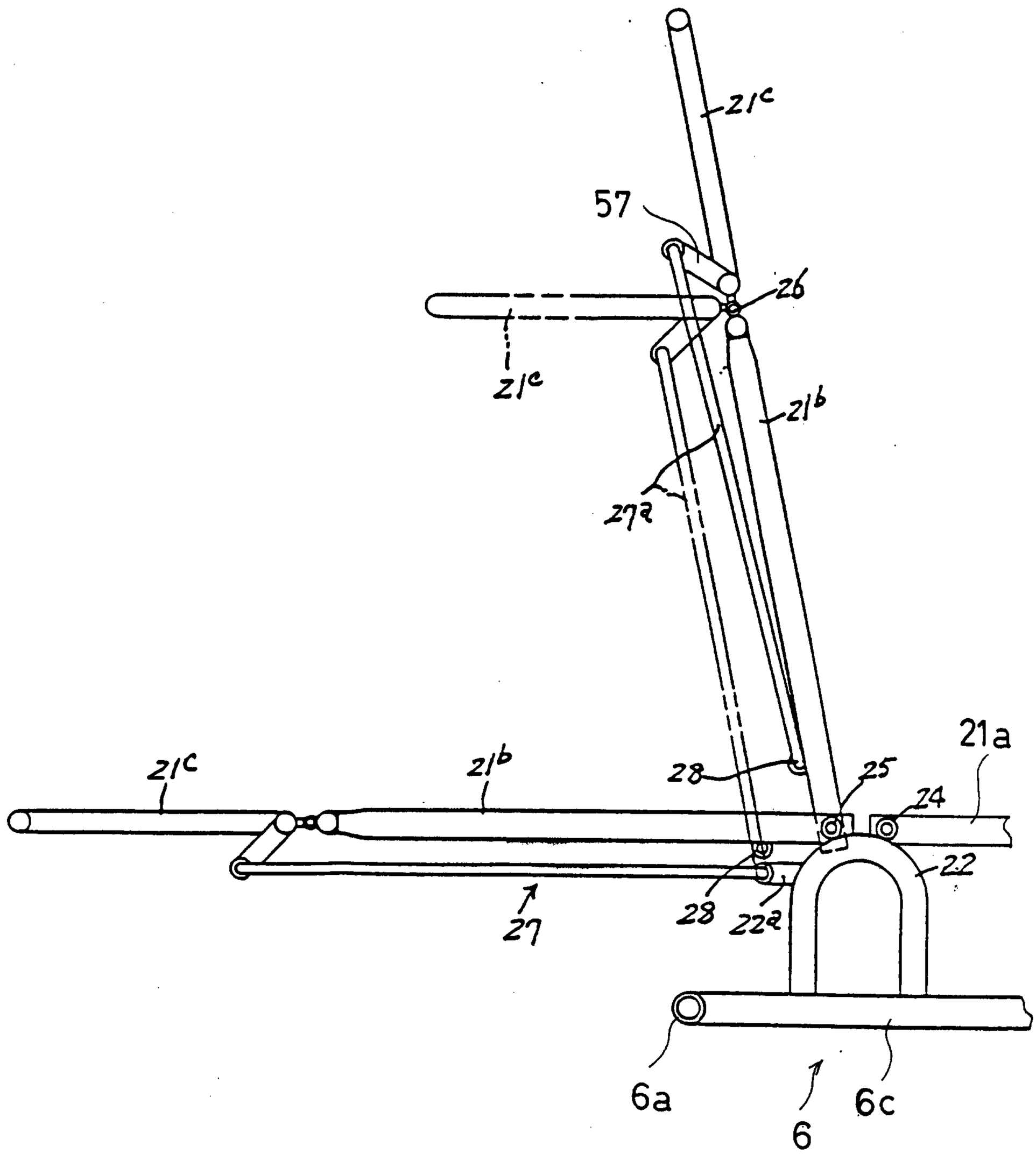


Marcus + Associates

Fig.10

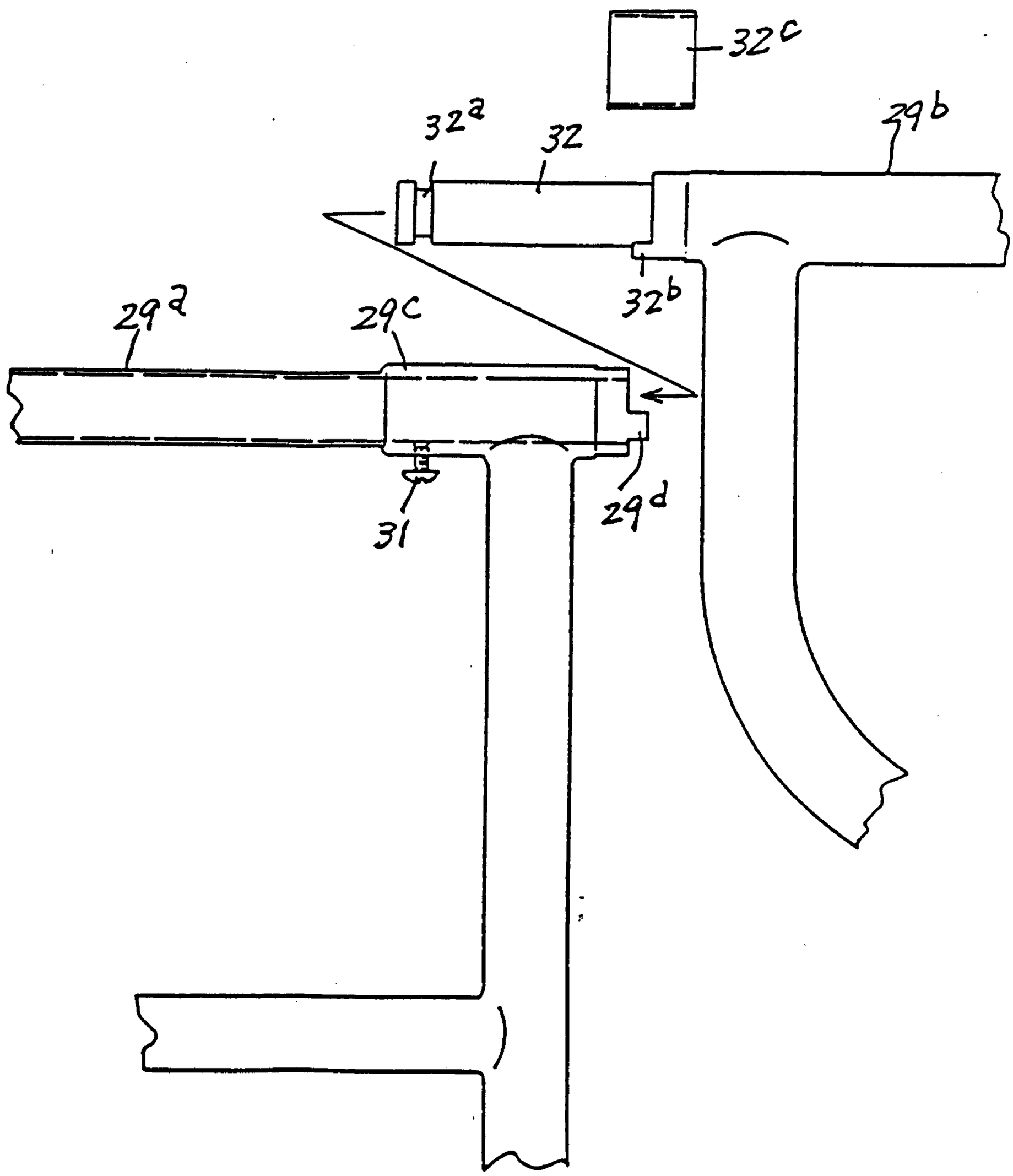


Marcus + Associates

Fig. 9

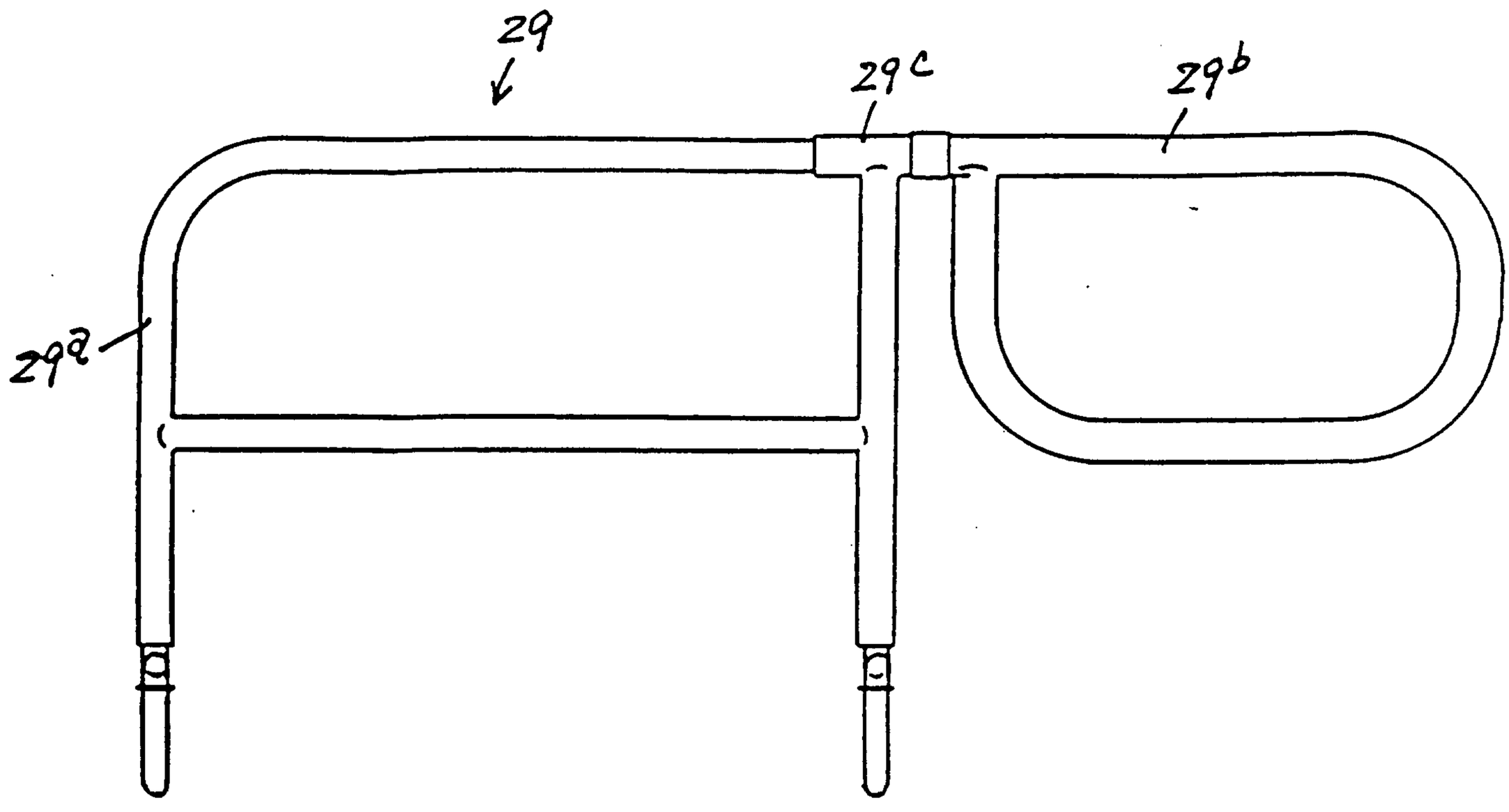


Fig. 11

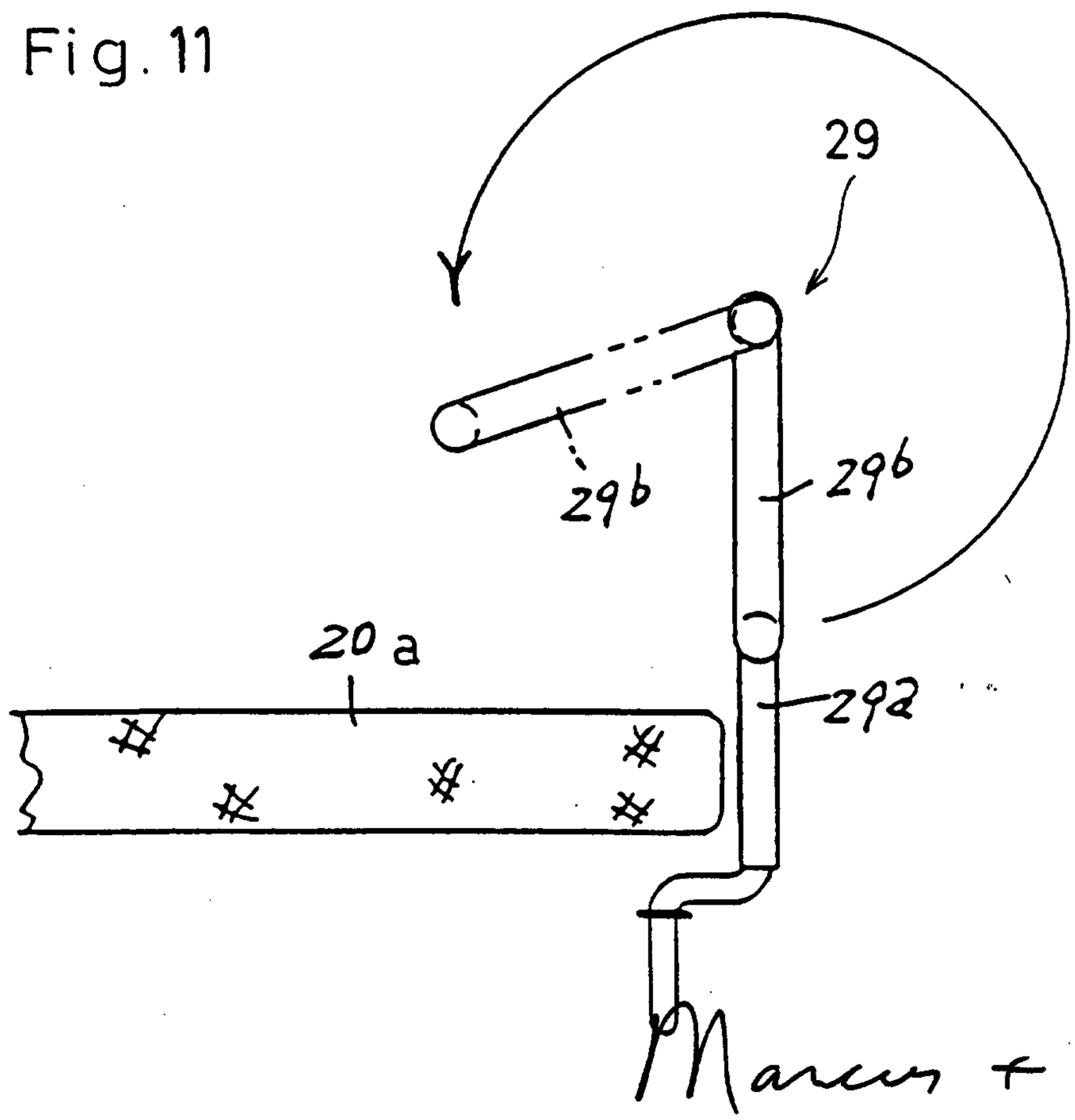


Marcus + Associates

Fig. 12

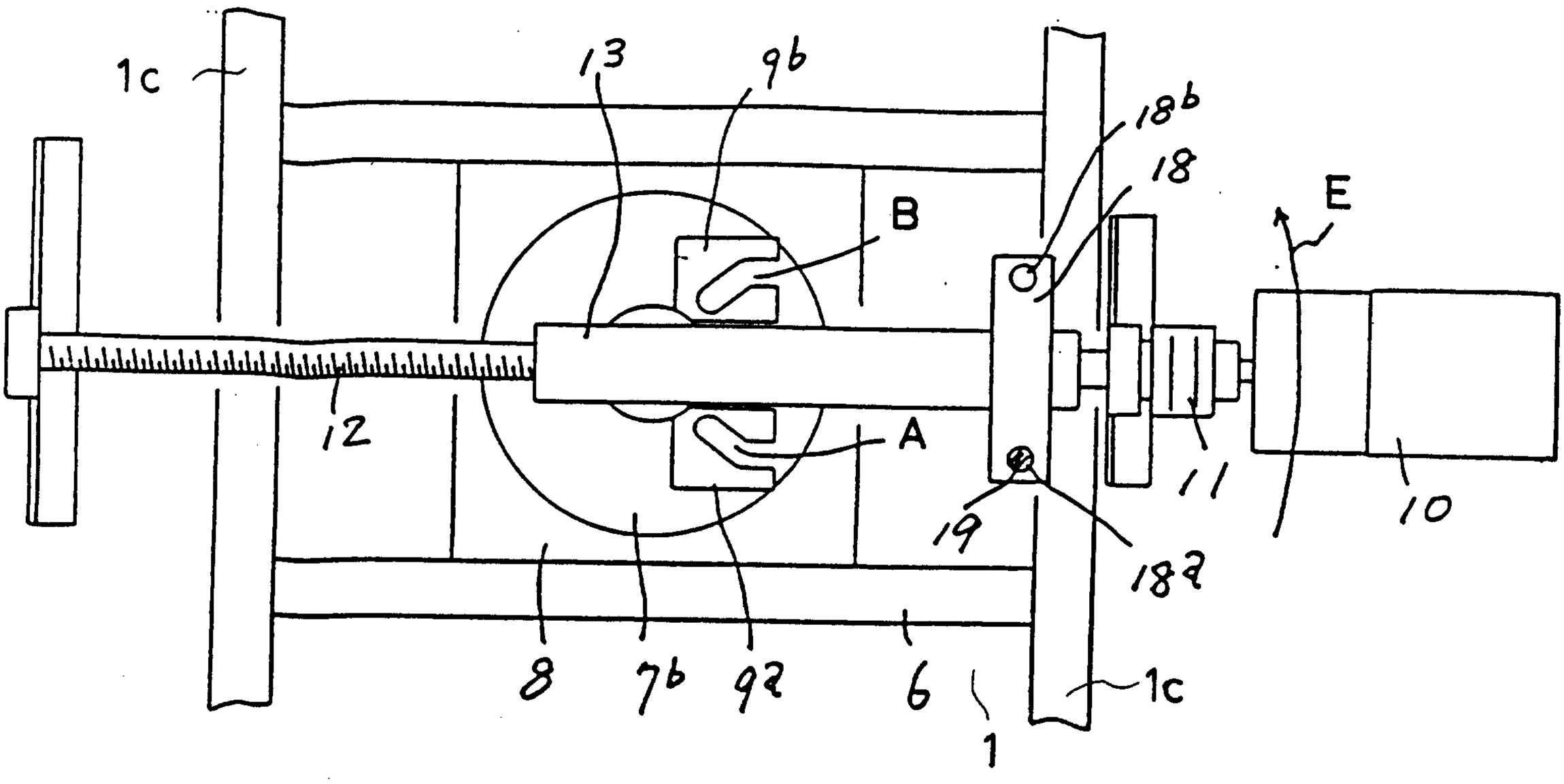


Fig. 13

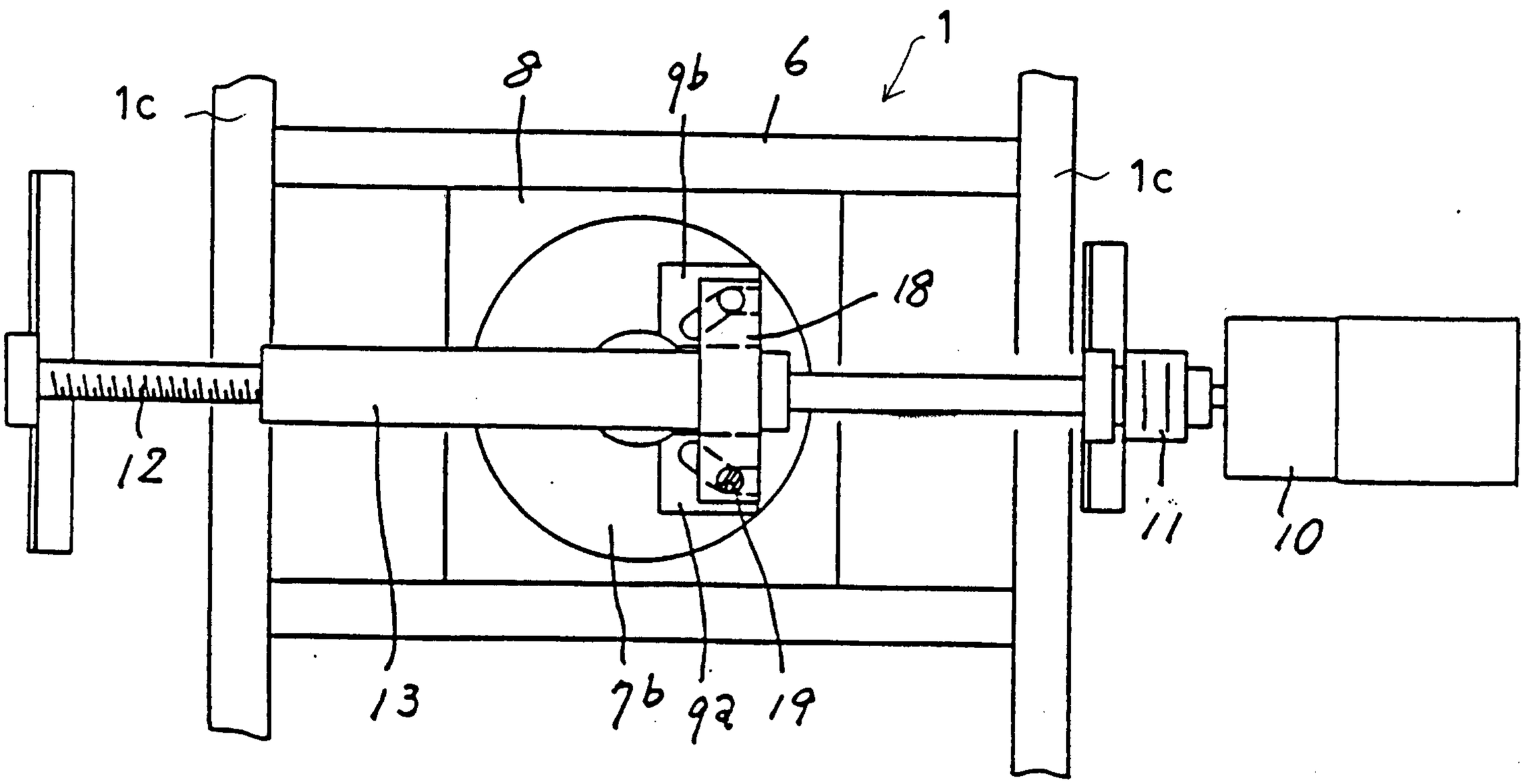


Marcus + Associates

Fig.14

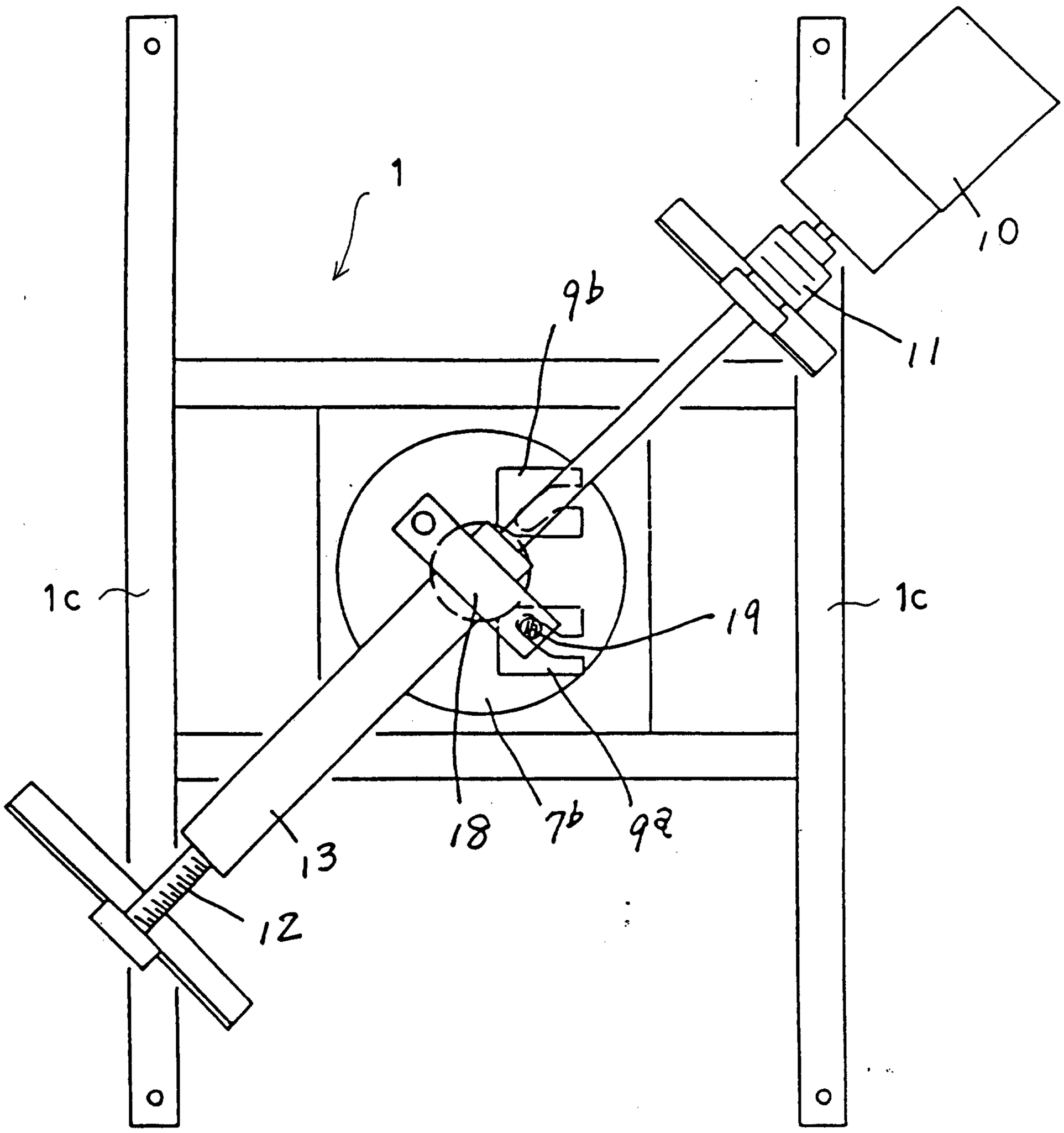


Marcus + Associates

Fig. 15

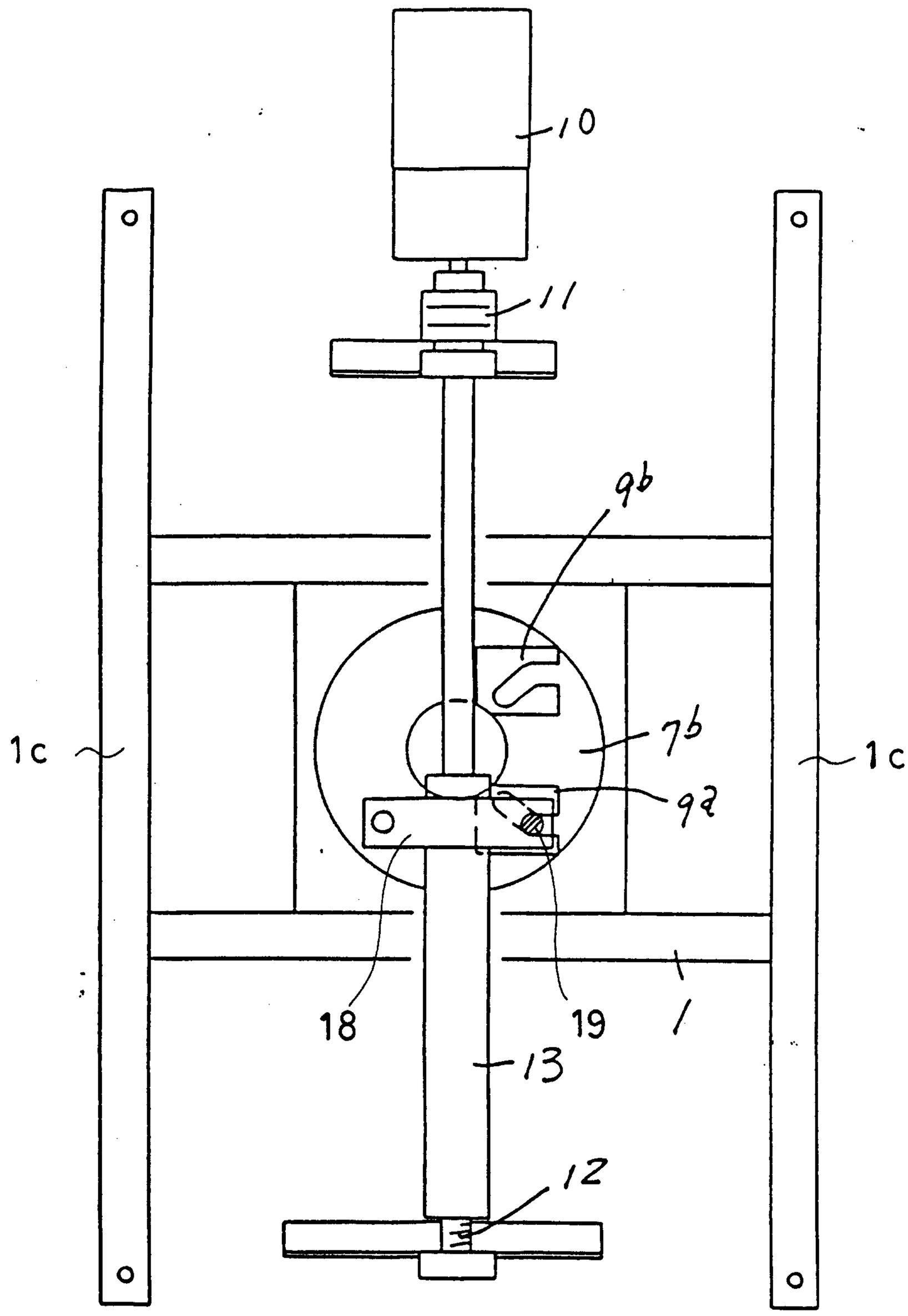


Marcus + Associates

Fig.16

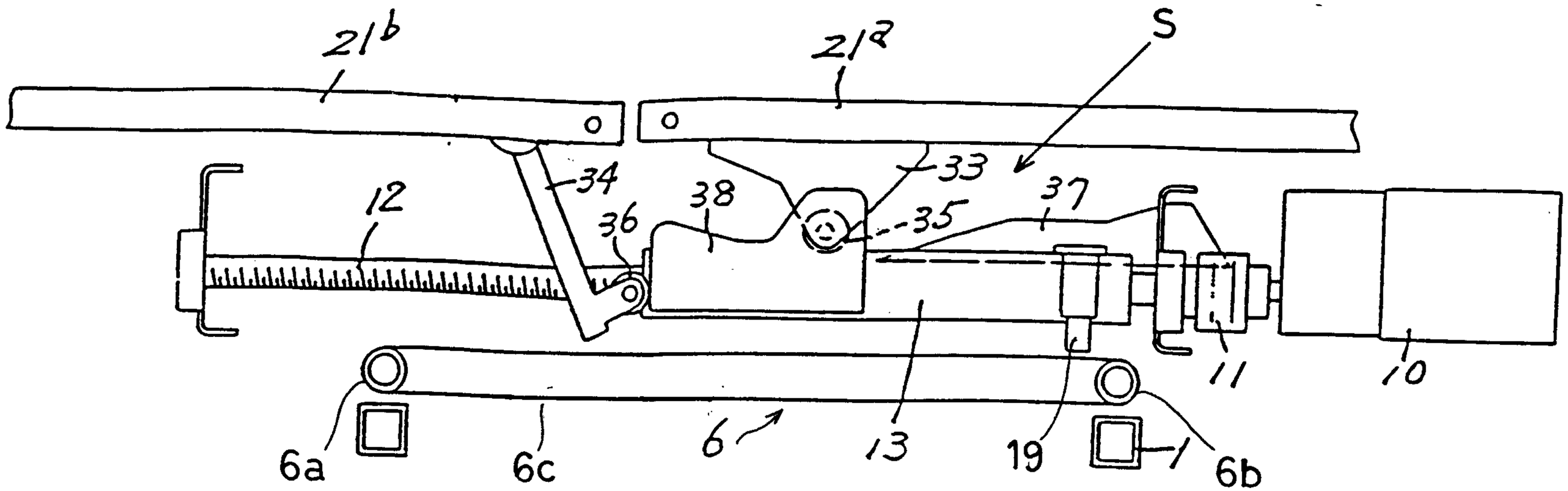


Fig.17

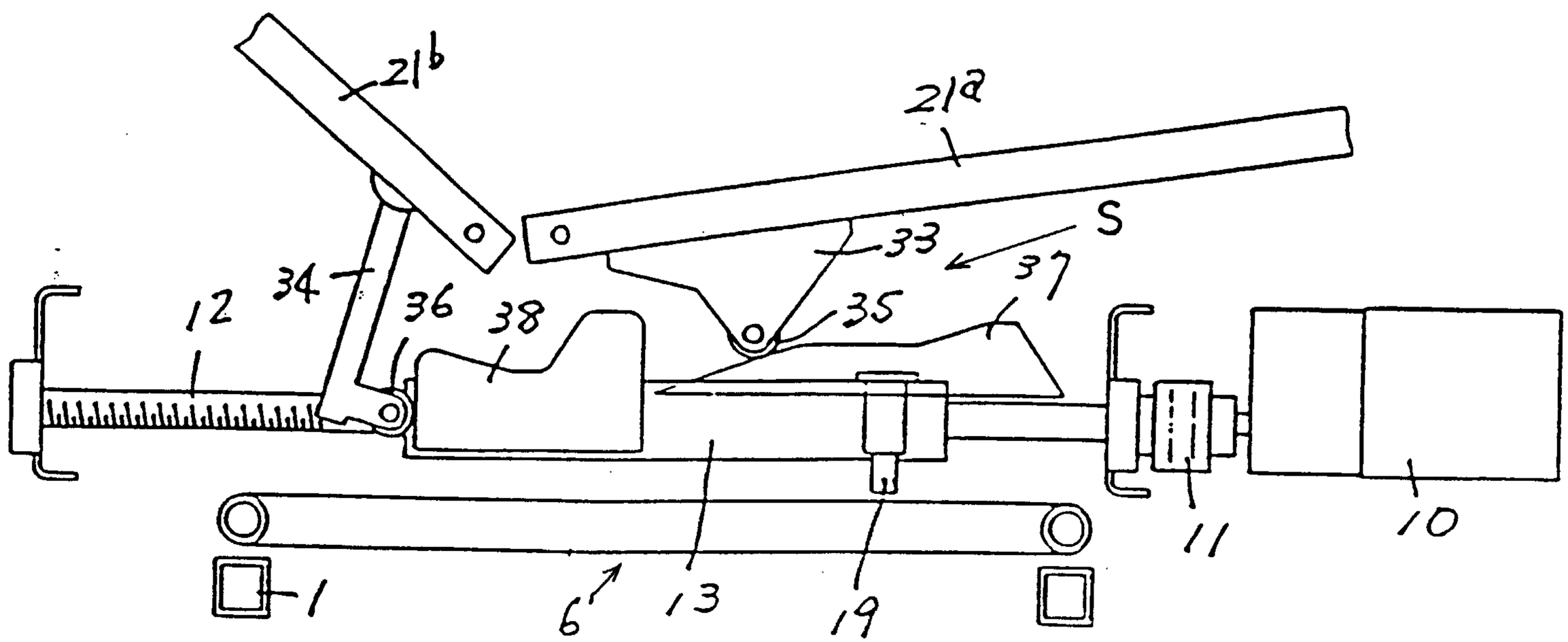


2175608

Marcus + Associates

Fig. 18

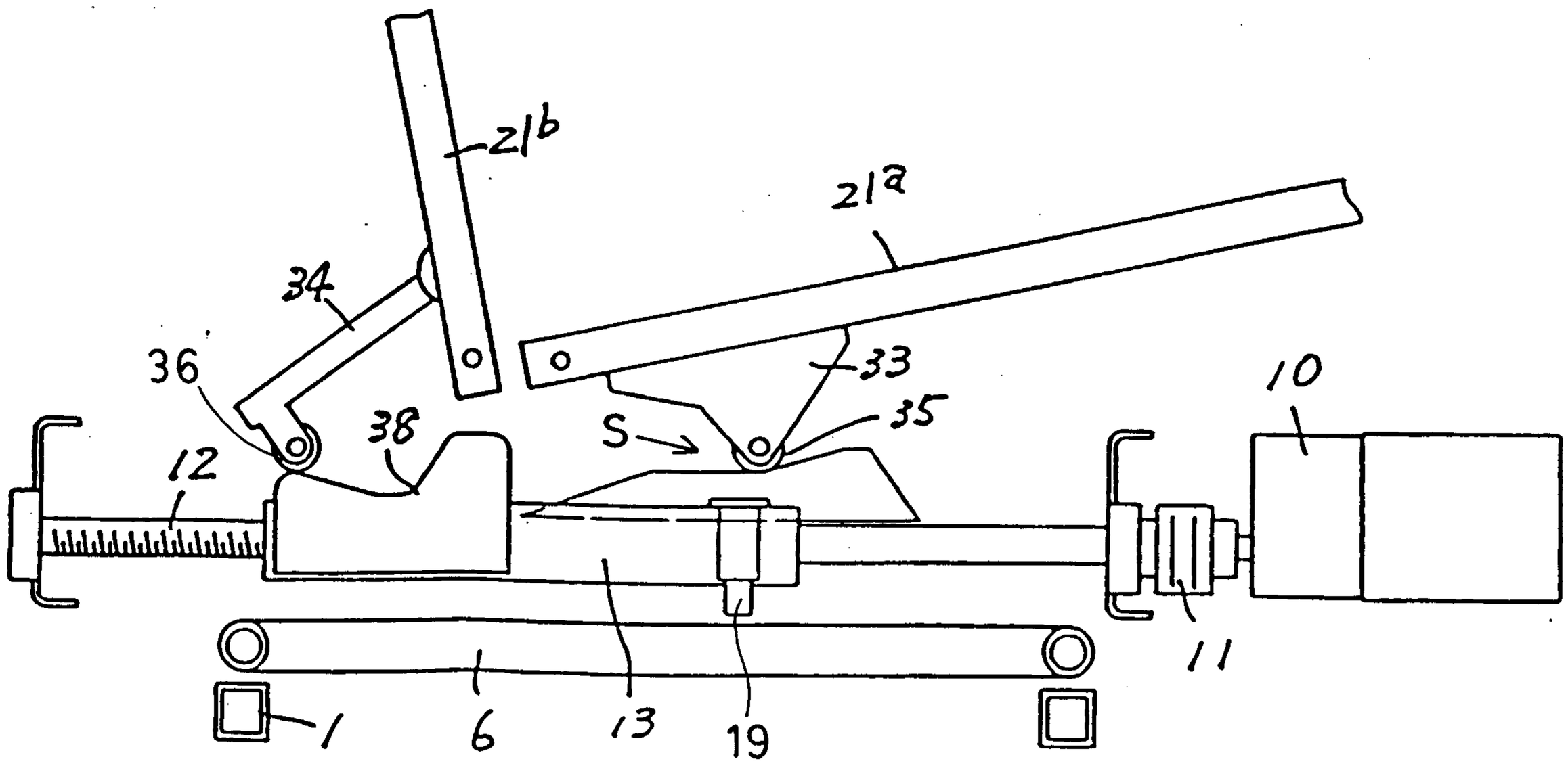


2175608

Marcus + Associates

Fig.19

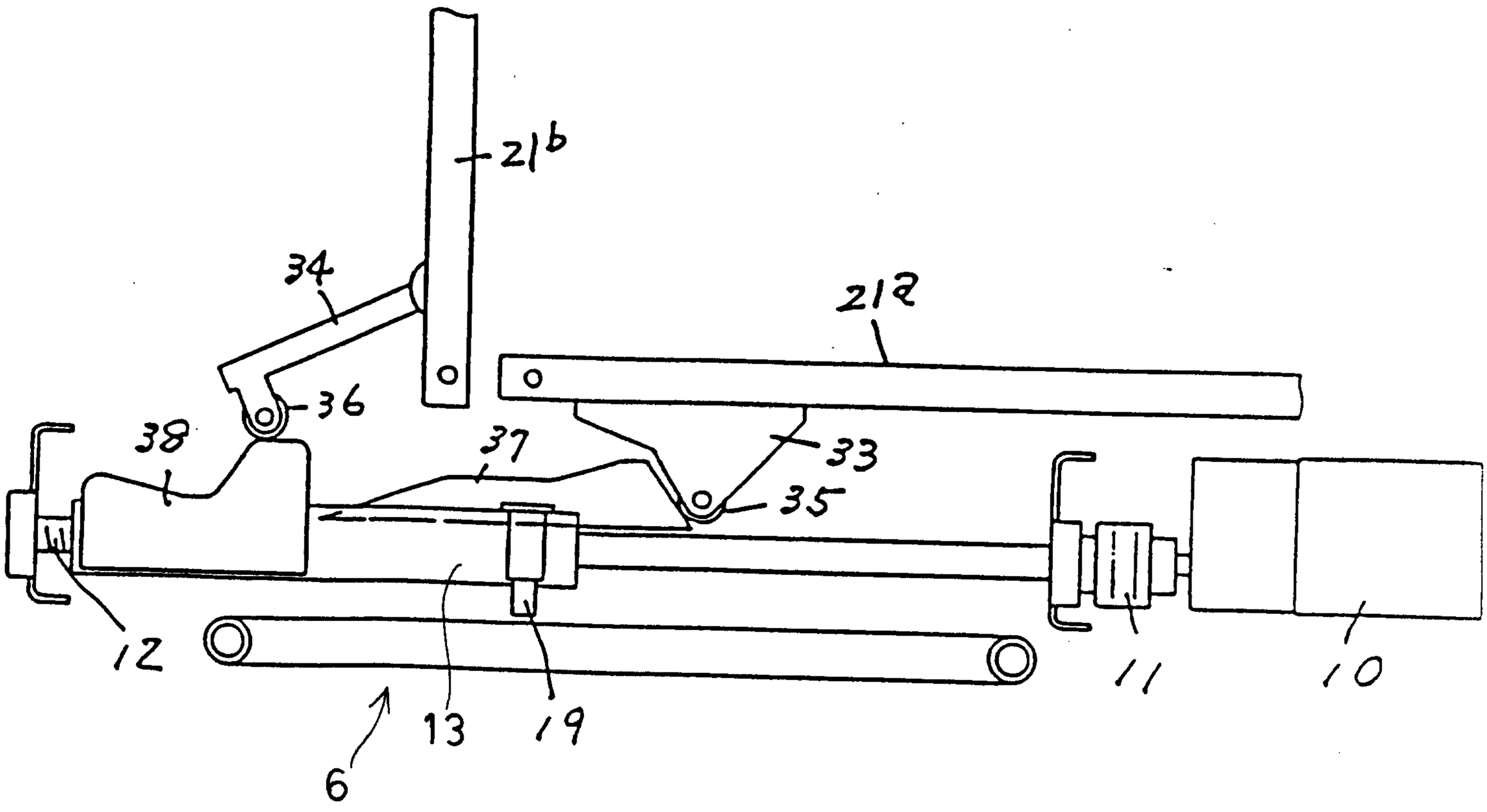


Fig.20

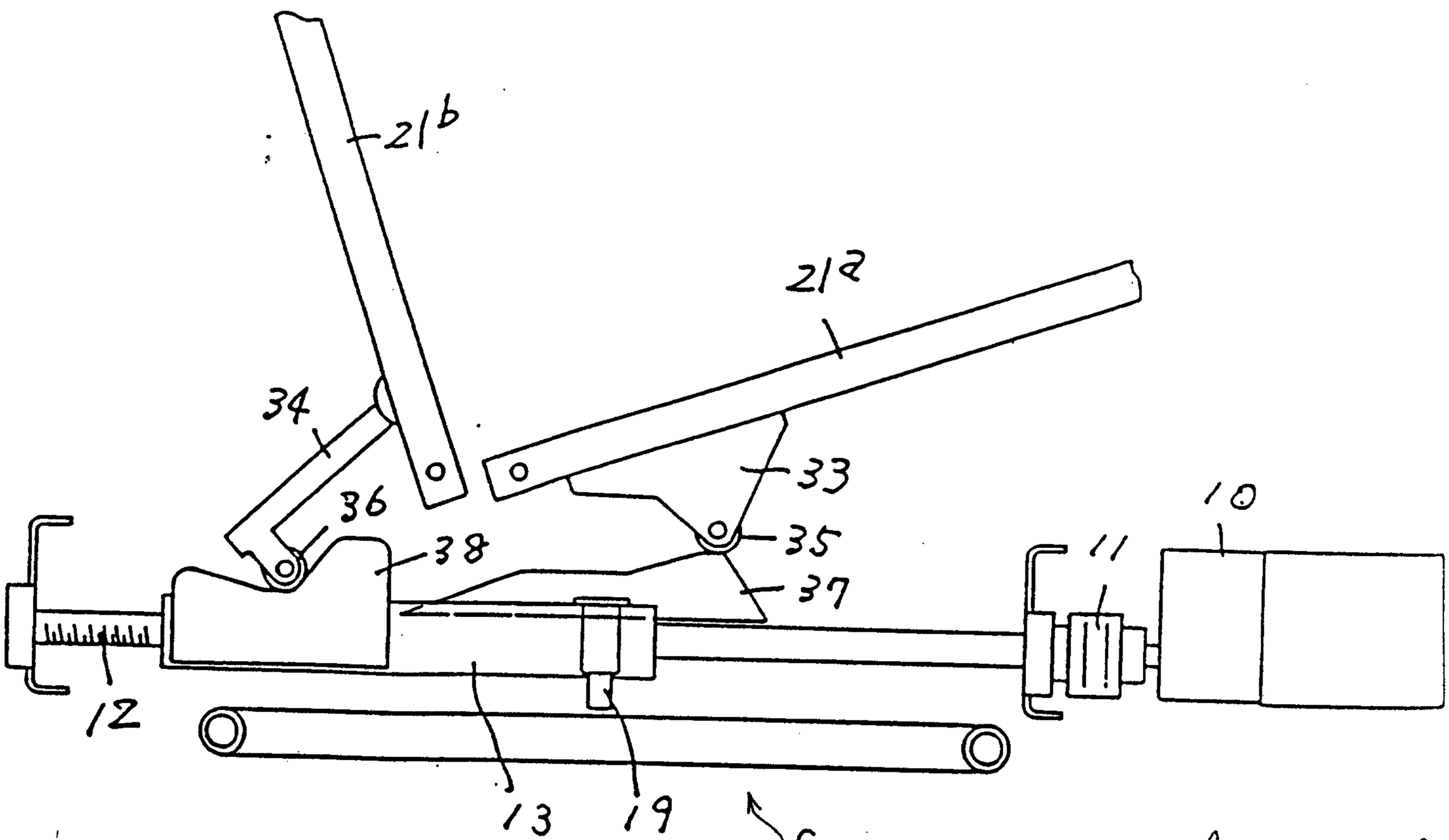


Marcus + Associates

Fig. 21

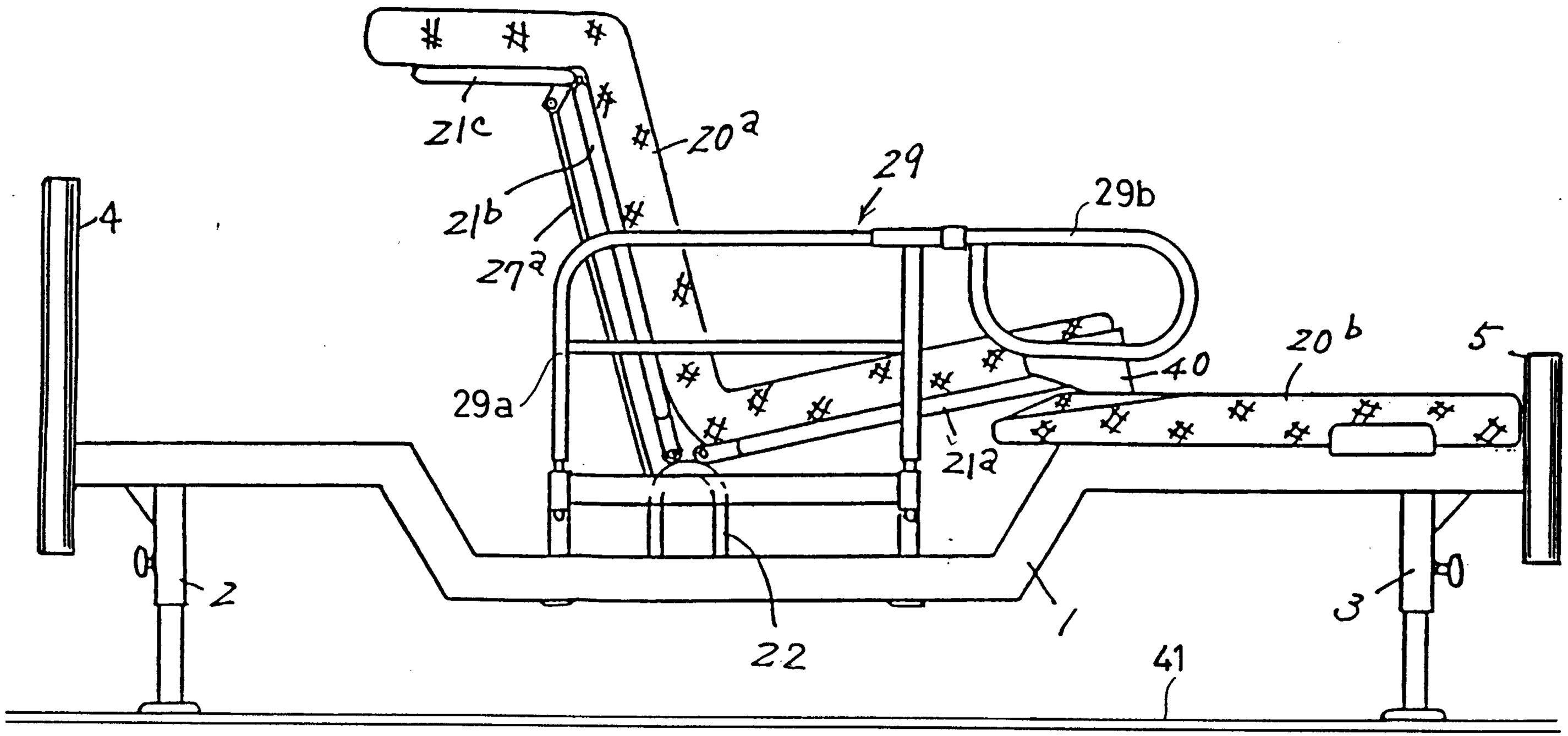


Marcus + Associates

2175608

Fig. 22

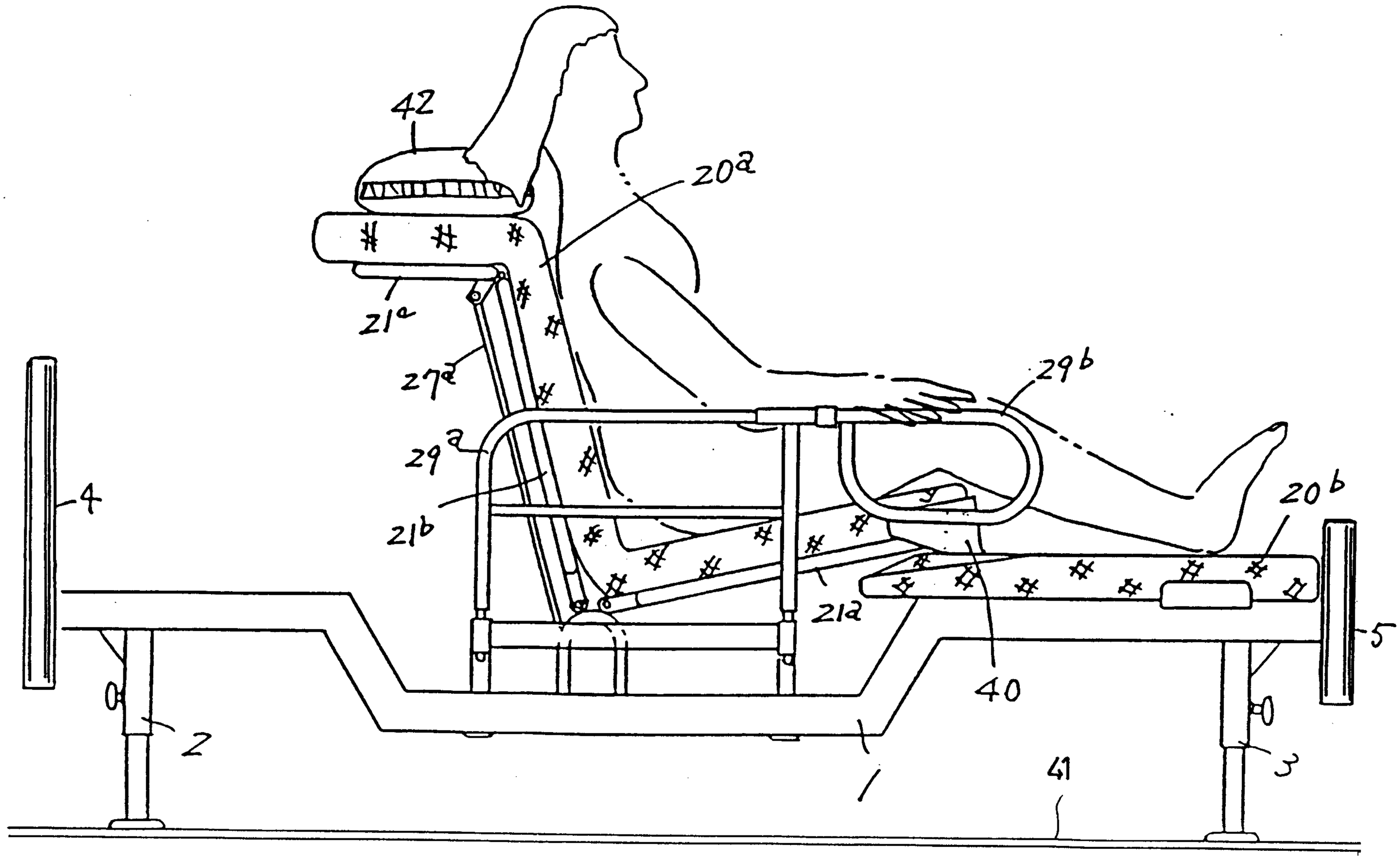


Marcus + Associates

2175608

Fig. 23

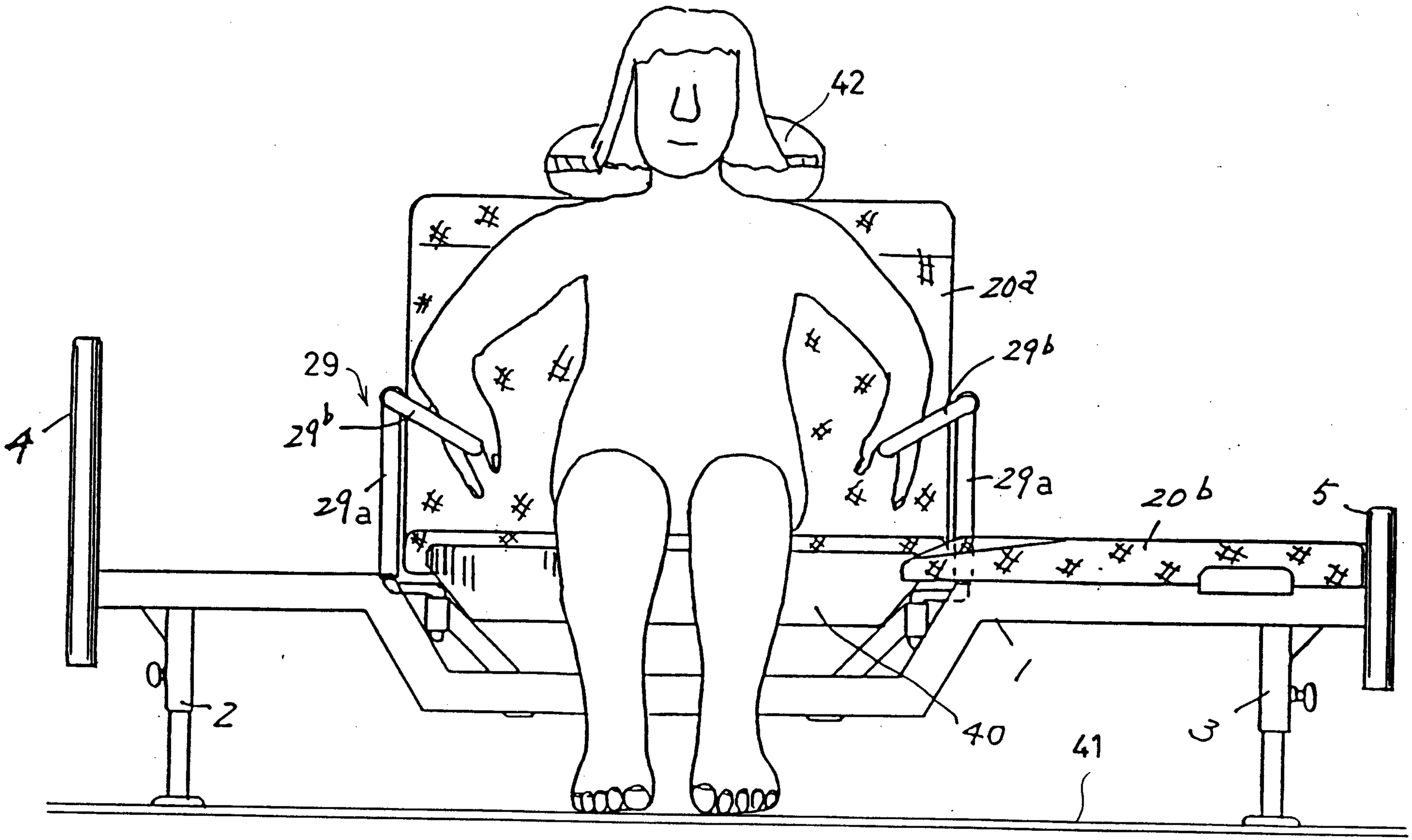


2175608
Marcus + Associates