(12) INTERNATIONAL APPLICATION PUBLISHED UNDER THE PATENT COOPERATION TREATY (PCT)

(19) World Intellectual Property Organization
International Bureau

(43) International Publication Date
14 November 2013 (14.11.2013)

WIPO | PCT

(10) International Publication Number
WO 2013/169435 A1

(51) International Patent Classification:
F01D 5/18 (2006.01)

(21) International Application Number:
PCT/US2013/036319

(22) International Filing Date:
12 April 2013 (12.04.2013)

(25) Filing Language: English

(26) Publication Language: English

(30) Priority Data:
61/644,618 9 May 2012 (09.05.2012) US
13/470,820 14 May 2012 (14.05.2012) US

(71) Applicant: **CENERAL ELECTRIC COMPANY** [US/US]; 1 River Road, Schenectady, NY 12345 (US).

(72) Inventors: **BERGHOLZ, Robert, Frederick**; 6766 Little River Lane, Loveland, OH 45140 (US). **DURSTOCK, Daniel, Lee**; 439 Pickett Dr., Ft. Wright, KY 41011 (US).

(74) Agents: **DOMBROWSKI, Joanna, M.** et al.; General Electric Company, Global Patent Operation, 2 Corporate Drive, Suite 648, Shelton, CT 06484 (US).

(81) Designated States *(unless otherwise indicated, for every kind of national protection available)*: AE, AG, AL, AM, AO, AT, AU, AZ, BA, BB, BG, BH, BN, BR, BW, BY, BZ, CA, CH, CL, CN, CO, CR, CU, CZ, DE, DK, DM, DO, DZ, EC, EE, EG, ES, FI, GB, GD, GE, GH, GM, GT, HN, HR, HU, ID, IL, IN, IS, JP, KE, KG, KM, KN, KP, KR, KZ, LA, LC, LK, LR, LS, LT, LU, LY, MA, MD, ME, MG, MK, MN, MW, MX, MY, MZ, NA, NG, NI, NO, NZ, OM, PA, PE, PG, PH, PL, PT, QA, RO, RS, RU, RW, SC, SD, SE, SG, SK, SL, SM, ST, SV, SY, TH, TJ, TM, TN, TR, TT, TZ, UA, UG, US, UZ, VC, VN, ZA, ZM, ZW.

(84) Designated States *(unless otherwise indicated, for every kind of regional protection available)*: ARIPO (BW, GH, GM, KE, LR, LS, MW, MZ, NA, RW, SD, SL, SZ, TZ, UG, ZM, ZW), Eurasian (AM, AZ, BY, KG, KZ, RU, TJ, TM), European (AL, AT, BE, BG, CH, CY, CZ, DE, DK, EE, ES, FI, FR, GB, GR, HR, HU, IE, IS, IT, LT, LU, LV, MC, MK, MT, NL, NO, PL, PT, RO, RS, SE, SI, SK, SM, TR), OAPI (BF, BJ, CF, CG, CI, CM, GA, GN, GQ, GW, ML, MR, NE, SN, TD, TG).

Declarations under Rule 4.17:

— *as to applicant's entitlement to apply for and be granted a patent (Rule 4.17(ii))*

— *as to the applicant's entitlement to claim the priority of the earlier application (Rule 4.17(iii))*

Published:

— *with international search report (Art. 21(3))*

(54) **Title**: TURBINE AIRFOIL TRAILING EDGE COOLING HOLE PLUG AND SLOT

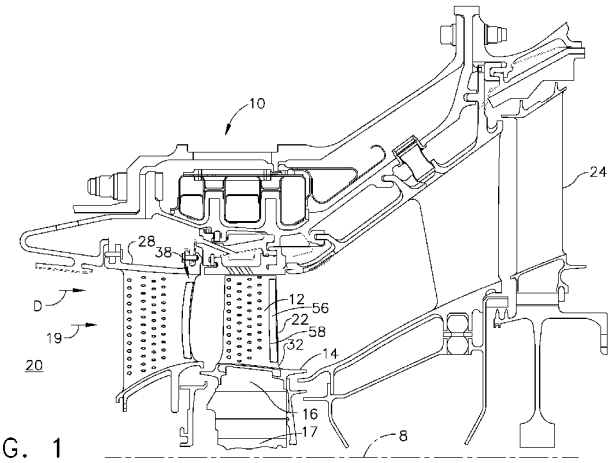

FIG. 1

(57) **Abstract**: A turbine airfoil (12) includes pressure and suction sidewalls (42, 44) extending along a span (S) from a base (34) to a tip (36). Spanwise spaced apart trailing edge cooling holes (30) disposed in pressure sidewall (42). All or a plurality of cooling holes (30) end at a trailing edge cooling slot (66) extending chordally substantially to an airfoil trailing edge (TE). Each cooling hole (30) includes a curved inlet (70), a metering section (100) with a constant area and constant width flow cross section (74), and a spanwise diverging section (102) leading into slot (66). Axial partitions (68) extend chordally between and radially separate cooling holes (30) along span (S). Aft ends (86) of partitions (68) include swept boat tails (88). Upper and lower deck sidewalls (136, 138) spanwise bound a deck (130) of slot (66) and extend outward to an external surface (43) of pressure sidewall (42). Fillets (62) between sidewalls (136, 138) and deck (130) have fillet radii (RF) substantially the same size as bottom corner radii (RT) of flow cross section (74) of diverging sections (102) adjacent bottom corner radii (RT).

WO 2013/169435 A1

TURBINE AIRFOIL TRAILING EDGE COOLING HOLE PLUG AND SLOT

CROSS-REFERENCE TO RELATED APPLICATIONS

The present application claims priority to U.S. Provisional Patent Application Ser. No. 61/644/618, entitled "TURBINE AIRFOIL TRAILING EDGE COOLING HOLE PLUG AND SLOT", filed May. 09, 2012, the disclosure of which is hereby incorporated by reference.

BACKGROUND OF THE INVENTION

FIELD OF THE INVENTION

The present invention relates generally to gas turbine engine turbine airfoil cooling and, more specifically, to turbine airfoil trailing edge cooling holes leading to trailing edge cooling slot.

DESCRIPTION OF RELATED ART

In a gas turbine engine, air is pressurized in a compressor and mixed with fuel in a combustor for generating hot combustion gases. The hot gases are channeled through various stages of a turbine which extract energy therefrom for powering the compressor and producing work, such as powering an upstream fan in a typical aircraft turbofan engine application.

The turbine stages include stationary turbine nozzles having a row of hollow vanes which channel the combustion gases into a corresponding row of rotor blades extending radially outwardly from a supporting rotor disk. The vanes and blades have corresponding hollow airfoils with corresponding cooling circuits therein.

The cooling air is typically compressor discharge air which is diverted from the combustion process and, therefore, decreases overall efficiency of the engine. The amount of cooling air must be minimized for maximizing the efficiency of the engine, but sufficient cooling air must nevertheless be used for adequately cooling the turbine airfoils for maximizing their useful life during operation. Each airfoil includes a generally concave pressure sidewall and, an opposite, generally convex suction sidewall extending longitudinally or radially outwardly along a span from an airfoil base to an airfoil tip and axially in a chordwise direction between leading and trailing edges. For a turbine blade, the airfoil span extends from a root at the radially inner

platform to a radially outer tip spaced from a surrounding turbine shroud. For a turbine vane, the airfoil extends from a root integral with a radially inner band to a radially outer tip integral with an outer band.

Each turbine airfoil also initially increases in thickness aft of the leading edge and then decreases in thickness to a relatively thin or sharp trailing edge where the pressure and suction sidewalls join together. The wider portion of the airfoil has sufficient internal space for accommodating various forms of internal cooling circuits and turbulators for enhancing heat transfer cooling inside the airfoil, whereas, the relatively thin trailing edge has correspondingly limited internal cooling space.

Each airfoil typically includes various rows of film cooling holes extending through the sidewalls thereof which discharge the spent cooling air from the internal circuits. The film cooling holes are typically extend in the aft direction toward the trailing edge and create a thin film of cooling air over the external surface of the airfoil that provides a thermally insulating air blanket for additional protection against the hot combustion gases which flow over the airfoil surfaces during operation.

The thin trailing edge is typically protected by a row of trailing edge cooling slots or a single elongated slot which breach the pressure sidewall at a breakout immediately upstream of the trailing edge for discharging film cooling air thereover from the cooling holes. The single trailing edge cooling slot has an outlet aperture in the pressure side which begins at a breakout at aft ends of axially extending partitions which define the cooling holes. The axial partitions may be integrally formed with the pressure and suction sides of the airfoil and themselves must be cooled by the air discharged through the cooling holes defined thereby. The partitions typically converge in the aft direction toward the trailing edge so that the cooling holes diverge toward the trailing edge with a shallow divergence angle that promotes diffusion of the discharged cooling air with little, if any, flow separation along the sides of the partitions.

Aerodynamic and cooling performance of the trailing edge cooling slot is directly related to the specific configuration of the cooling slots and the intervening partitions. The flow area of the cooling holes and slot regulates the flow of cooling air discharged through the cooling slot and the geometry of the cooling slots affects cooling performance thereof.

Accordingly, it is desired to provide a turbine airfoil having improved trailing edge cooling and cooling holes and cooling slot for improving airfoil durability and engine

performance. It is also desired to minimize the amount of cooling flow used for trailing edge cooling in order to maximize fuel efficiency of the turbine and the engine.

SUMMARY OF THE INVENTION

A gas turbine engine turbine airfoil (12) includes widthwise spaced apart pressure and suction sidewalls (42, 44) extending outwardly along a span (S) from an airfoil base (34) to an airfoil tip (36) and extending in a chordwise direction (C) between opposite leading and trailing edges (LE, TE). A spanwise row (38) of spanwise spaced apart trailing edge cooling holes (30) encased in the airfoil (12) between the pressure and suction sidewalls (42, 44). At least a plurality of the trailing edge cooling holes (30) end at a single spanwise extending trailing edge cooling slot (66) extending chordally substantially to the trailing edge (TE). Each of the cooling holes (30) includes in downstream serial cooling flow relationship, a curved inlet (70), a metering section (100) with a constant area and constant width flow cross section (74), and a spanwise diverging section (102) leading into the trailing edge cooling slot (66). Axial partitions (68) extend chordally between and radially separate the cooling holes (30) along the span (S). Aft ends (86) of the partitions (68) include swept boat tails (88).

The boat tails (88) may be swept with each of the boat tails (88) including a boat tail trailing edge (90) having an apex (92) spanwise located between the pressure and suction sidewalls (42, 44). The boat tail trailing edge (90) sweeps aftwardly or downstream from the apex (92). The boat tail trailing edge (90) sweeps from the apex (92) spanwise or radially outwardly to the pressure sidewall (42) and inwardly to the suction sidewall (44) from the apex (92). The swept boat tails (88) may further include rounded cross sections (96) through the aft ends (86) of the partitions (68) between spanwise pairs (94) of adjacent cooling holes (30).

The pressure and suction sidewalls (42, 44) may include pressure and suction sidewall surfaces (39, 40) respectively in the hole (30) and the pressure sidewall surface (39) may be planar through the entire metering and diverging sections (100, 102). The width (W) may be constant through the metering and diverging sections (100, 102) of the hole (30).

The airfoil may include a deck (130) in the slot (66) extending chordwise or downstream from the diverging sections (102) of the cooling holes (30) substantially to the airfoil trailing edge (TE) and extending spanwise or radially outwardly from a bottommost one (132) to a topmost one (134) of the trailing edge cooling holes (30). Upper and lower deck sidewalls (136,

138) spanwise bound the deck (130) and extend from the deck (130) to an external surface (43) of the pressure sidewall (42). Fillets (62) in slot corners (64) between the upper and lower deck sidewalls (136, 138) and the deck (130) have fillet radii (RF) substantially the same size as bottom corner radii (RT) of the flow cross section (74) of the diverging sections (102) adjacent the bottom corner radii (RT).

BRIEF DESCRIPTION OF THE DRAWINGS

The foregoing aspects and other features of the invention are explained in the following description, taken in connection with the accompanying drawings where:

FIG. 1 is a longitudinal, sectional view illustration of an exemplary embodiment of turbine vane and rotor blade airfoils having cooling holes culminating at a spanwise extending trailing edge cooling slot.

FIG. 2 is a partially cutaway perspective view illustration of a blade illustrated in FIG. 1.

FIG. 3 is a pressure side sectional view of cooling holes with plugs in cooling holes with metering and diffusing sections leading into the trailing edge cooling slot illustrated in FIG. 2.

FIG. 4 is a cross sectional schematical view illustration of one of the cooling holes with the plug in the diffusing section leading into the trailing edge cooling slot taken through 4-4 in FIG. 3.

FIG. 5 is an upstream looking perspective view illustration of the cooling holes, the plugs, and the trailing edge cooling slot illustrated in FIG. 3.

FIG. 6 is a perspective view of the cooling holes and alternative plugs extending into the trailing edge cooling slots illustrated in FIG. 3.

FIG. 7 is an enlarged perspective view illustration of boat tail aft ends of axial partitions between the cooling holes illustrated in FIG. 6.

FIG. 8 is a cross sectional schematical view illustration of a flow cross section in the metering section taken through 8-8 in FIG. 3.

FIG. 9 is a cross sectional schematical view illustration of a flow cross section in the diverging section taken through 9-9 in FIG. 3.

FIG. 10 is a cross sectional schematical view illustration of one of the cooling holes with the alternative plug illustrated in FIG. 6.

DETAILED DESCRIPTION OF THE INVENTION

Illustrated in FIG. 1 is an exemplary gas turbine engine high pressure turbine stage 10 circumscribed about an engine centerline axis 8 and positioned between a combustor 20 and a low pressure turbine (LPT) 24. The combustor 20 mixes fuel with pressurized air for generating hot combustion gases 19 which flows downstream D through the turbines.

The high pressure turbine stage 10 includes a turbine nozzle 28 upstream of a high pressure turbine (HPT) 22 through which the hot combustion gases 19 are discharged into from the combustor 20. The exemplary embodiment of the high pressure turbine 22 illustrated herein includes at least one row of circumferentially spaced apart high pressure turbine blades 32. Each of the turbine blades 32 includes a turbine airfoil 12 integrally formed with a platform 14 and an axial entry dovetail 16 used to mount the turbine blade on a perimeter of a supporting rotor disk 17.

Referring to FIG. 2, the airfoil 12 extends radially outwardly along a span S from an airfoil base 34 on the blade platform 14 to an airfoil tip 36. During operation, the hot combustion gases 19 are generated in the engine and flow downstream D over the turbine airfoil 12 which extracts energy therefrom for rotating the disk supporting the blade for powering the compressor (not shown). A portion of pressurized air 18 is suitably cooled and directed to the blade for cooling thereof during operation.

The airfoil 12 includes widthwise spaced apart generally concave pressure and convex suction sidewalls 42, 44. The pressure and suction sidewalls 42, 44 extend longitudinally or radially outwardly along the span S from the airfoil base 34 to the airfoil tip 36. The sidewalls also extend axially in a chordwise direction C between opposite airfoil leading and trailing edges LE, TE. The airfoil 12 is hollow with the pressure and suction sidewalls 42, 44 being spaced widthwise or laterally apart between the airfoil leading and trailing edges LE, TE to define an internal cooling cavity or circuit 54 therein for circulating pressurized cooling air or coolant flow 52 during operation. The pressurized cooling air or coolant flow 52 is from the portion of pressurized air 18 diverted from the compressor.

The turbine airfoil 12 increases in width W or widthwise from the airfoil leading edge LE to a maximum width aft therefrom and then converges to a relatively thin or sharp airfoil trailing edge TE. The size of the internal cooling circuit 54 therefore varies with the width W of the airfoil, and is relatively thin immediately forward of the trailing edge TE where the two

sidewalls integrally join together and form a thin trailing edge portion 56 of the airfoil 12. A spanwise extending trailing edge cooling slot 66 is provided at or near this thin trailing edge portion 56 of the airfoil 12 to cool it.

Illustrated in FIGS. 3-7, is a spanwise row 38 of spanwise spaced apart trailing edge cooling holes 30 encased or buried and formed in the airfoil 12 between the pressure and suction sidewalls 42, 44. All or a plurality of the cooling holes (30) terminate or end at the trailing edge cooling slot 66 to supply coolant cooling air or coolant flow 52 to the slot 66. The trailing edge cooling slot 66 extends chordally substantially to the trailing edge TE. The trailing edge cooling holes 30 are disposed along the span S of the trailing edge TE in flow communication with the internal cooling circuit 54 for discharging the coolant flow 52 therefrom during operation. A floor or deck 130 of the slot 66 extends chordwise or downstream from the diverging sections 102 of the cooling holes 30 substantially to the airfoil trailing edge TE. The deck 130 extends spanwise or radially outwardly from a bottommost one 132 to a topmost one 134 of the trailing edge cooling holes 30. The deck 130 is spanwise bound by upper and lower deck sidewalls 136, 138 which extend from the deck 130 to an external surface 43 of the pressure sidewall 42. A slot surface 60 extends widthwise between the upper and lower deck sidewalls 136, 138 along the deck 130. Fillets 62 in slot corners 64 between the upper and lower deck sidewalls 136, 138 and the deck 130 have fillet radii RF that may be substantially the same size as bottom corner radii R of the flow cross section 74 of the diverging sections 102 adjacent the bottom corner radii R (illustrated in FIG. 9). The fillet radii RF helps with castability of the trailing edge cooling slot 66.

The trailing edge cooling holes 30 are illustrated in more particularity in FIG. 3. Each cooling hole 30 includes, in downstream serial cooling flow relationship, a downstream converging or bellmouth shaped curved inlet 70, a constant area and constant width flow cross section metering section 100, and a spanwise diverging section 102 which leads into the trailing edge cooling slot 66 and supplies the slot with cooling air or coolant flow 52. Referring to FIGS. 3-6, the trailing edge cooling slot 66 begins at a breakout 58 located at downstream ends 69 of the diverging sections 102. The diverging sections 102 of the cooling holes 30 lead into the trailing edge cooling slot 66 which breaches the external surface 43 of the pressure sidewall 42 at a breakout lip 49 spaced forward or upstream from the trailing edge TE.

The cooling holes 30 are separated radially along the span S from each other by

corresponding axial partitions 68 which extend downstream toward the trailing edge TE. The curved inlet 70 is illustrated herein as downstream converging or, more particularly, a bellmouth inlet. The inlet 70 is defined at and between forward ends 72 of the partitions 68. The partitions 68 include semi-circular forward ends 72 having diameters 73 that define the bellmouth inlet 70. Each of the cooling holes 30 includes spanwise spaced apart upper and lower hole surfaces 46, 48 along a corresponding adjacent pair of upper and lower ones 25, 26 of the axial partitions 68. A spanwise height H of the hole 30 is defined between the upper and lower hole surfaces 46, 48 of the upper and lower ones 25, 26 of the axial partitions 68 as illustrated in FIG. 3. The metering section 100, the diverging section 102, and the trailing edge cooling slot 66 have downstream extending first, second, and third lengths L1, L2, and L3 respectively as illustrated in FIG. 3.

Referring to FIGS. 3 and 5-7, aft ends 86 of the partitions 68 have aerodynamically-shaped swept boat tails 88 design and shaped to reduce aerodynamic losses due to flow separation wakes at the aft ends 86. The swept boat tails 88 are also designed to facilitate flow spreading past the slot breakout 58 at the downstream end 69 of the diverging section 102. Each of the swept boat tails 88 include a boat tail trailing edge 90 extending spanwise between the pressure and suction sidewalls 42, 44 and having an apex 92 spanwise located between the breakout lip 49 or the pressure sidewall 42 and the suction sidewall 44 as illustrated in FIG. 6. The boat tail trailing edge 90 sweeps aftwardly or downstream from the apex 92. The boat tail trailing edge 90 sweeps from the apex 92 spanwise or radially outwardly to the breakout lip 49 or the pressure sidewall 42 and inwardly to the suction sidewall 44 from the apex 92. Each of the swept boat tails 88 includes rounded cross sections 96 through the aft ends 86 of the partitions 68 between spanwise pairs 94 of adjacent cooling holes 30. The boat tail trailing edges 90 provide additional strength at the breakout lip 49 and merges the flows of the different cooling holes 30 at the floor or deck 130 upstream of the breakout 58 which is an exit of the cooling holes 30.

Referring to FIGS. 3-5, aerodynamically shaped plugs 110 are disposed in the cooling holes 30. The plugs 110 extend downstream through at least a portion of the diverging section 102. The plugs 110 include a plug dome 114 rising up from a plug base 112. The plug dome 114 includes widthwise and spanwise rounded upstream and downstream dome ends 116, 118. The spanwise height H of the plug base is less than the spanwise height H of the cooling hole

along a plug length LP of the plug 110. The plug 110 is spanwise centered in the hole 30. The plug bases 112 are illustrated herein as extending along the suction sidewall surfaces 40 of the suction sidewalls 44. Alternatively, the plug bases 112 may extend along the pressure sidewall surfaces 39 of the pressure sidewalls 42. The plug 110 provides control of the rate of expansion of the area flow cross section 74 in the diverging section 102 of the cooling hole 30. The plug 110 helps maintain stable diffuser flow along the cooling hole surfaces i.e prevents or reduces flow separation and turbulence along the pressure and suction sidewall surfaces 39, 40 of the pressure and suction sidewalls 42, 44 respectively in the diverging section 102. The plug 110 allows the divergence of the upper and lower hole surfaces 46, 48 of the upper and lower ones 25, 26 of the axial partitions 68 in the diverging section 102 to be greater than without the plug, and still maintain attached and stable coolant flow 52 through the diverging section 102. The flow cross section 74 increases in area through the entire second length L2 of the diverging section 102 but the rate of this increase is controlled by the plug 110. The plug 110 is three dimensionally shaped or contoured to maintain attached and stable coolant flow 52 and prevent separation along the upper and lower hole surfaces 46, 48 of the upper and lower ones 25, 26 of the axial partitions 68 through the diverging section 102.

Referring to FIG. 12, the cooling hole 30 has a cross sectional hole area AH and the plug 110 has a cross sectional plug area AP. The flow cross section 74 between the plug 110 and the cooling hole 30 has a cross sectional flow area AF equal to the difference between the hole area AH and the plug area AP. The cross sectional flow area AF of the flow cross section 74 in the diverging section 102 increases in the downstream direction. The cross sectional flow area AF of the flow cross section 74 in the metering section 100 and in any portion of the diverging section 102 upstream of the plug 110 is the cross sectional hole area AH of the cooling hole 30.

The embodiment of the flow cross section 74 in the metering section 100 and in any portion of the diverging section 102 upstream of the plug 110 is illustrated in FIGS. 8 and 11 as having a race track shaped flow cross section 74 with the rectangular section 75 between spanwise or radially spaced apart rounded or semi-circular inner and outer end sections 82, 84. The race track shaped flow cross section 74 illustrated herein is spanwise elongated, has four equal corner radii R, and has a preferred width to height ratio W/H in a range of 0.15-0.50.

The embodiment of the flow cross section 74 in a portion of the diverging section 102 having the plug 110 illustrated in FIG. 12 may generally be described as having two relatively

wide rounded lobes 120 at distal ends 122 of a relatively narrow rectangular middle section 124. The height H of the flow cross section 74 increases through the entire length of the diverging section 102. The width W of the flow cross section 74 is constant where there is no plug 110 and varies across the height H of the flow cross section 74 where there is a plug 110 as illustrated in FIG. 4. The lobes 120 have a maximum width MW equal to the width W of the diverging section 102 as measured between the pressure and suction sidewall surfaces 39, 40 of the pressure and suction sidewalls 42, 44 respectively.

The lobes 120 extend between the pressure and suction sidewall surfaces 39, 40 of the pressure and suction sidewalls 42, 44 respectively in the diverging section 102. The lobes 120 are substantially wider than the middle section 124. The lower hole surface 48 of the lower ones 26 of the axial partitions 68 is substantially wider than the plug base 112 along the diverging section 102 where the plug 110 is located. This provides for the coolant flow 52 to pass between and cool the plug 110 and the pressure and suction sidewall surfaces 39, 40 of the pressure and suction sidewalls 42, 44 respectively in the diverging section 102.

The cooling holes 30, the trailing edge cooling slot 66, and the swept boat tails 88 are designed to provide a spanwise deck 130 film effectiveness over the entire slot deck 130 all the way downstream or aft to the terminus of the deck 130 the airfoil trailing edge TE, even at significantly reduced cooling flow. Airfoil cooling design studies have shown a potential cooling flow reduction of about 10 percent of stage 1 blade flow. The study also indicated at the same time, trailing edge temperatures are still 80 to 90 degrees F lower that more conventional slot designs, so further flow reductions are possible. This is a significant benefit to engine performance.

Referring to FIGS. 3-5, a hole width W of the hole 30 is defined between pressure and suction sidewall surfaces 39, 40 of the pressure and suction sidewalls 42, 44 respectively as illustrated in FIG. 4. The trailing edge cooling slot 66 and the deck 130 are open and exposed to the hot combustion gases 19 that pass through the high pressure turbine 22. The deck 130 extends for the entire third length L3 along the suction sidewall 44.

The cooling holes 30 and trailing edge cooling slot 66 are cast in cooling features. Casting these features provides good strength, low manufacturing costs, and durability for the airfoil and blades and vanes. The race track shaped flow cross section 74 with the rectangular section 75 between spanwise or radially spaced apart rounded or semi-circular inner and outer

end sections 82, 84 provides good cooling flow characteristics which reduces the amount of the coolant flow 52 needed to cool the airfoils. The bottom corner radii R contribute to good cooling, castability, and strength of these cooling features.

The spanwise elongated metering section 100 with the constant width W is sized to control the quantity of coolant flow 52 to benefit the engine cycle. The spanwise elongated metering section 100 and diverging section 102 expand the flow coverage at the breakout 58, evenly distributes coolant flow 52 in the trailing edge cooling slot 66. The constant width W metering section 100 upstream of the diverging section 102 of the hole 30 helps keep the coolant flow 52 fully attached in the diverging section 102. The constant width W metering section 100 with the racetrack shaped area and flow cross section 74 reduces trailing edge cooling flow 52.

The planar pressure sidewall surface 39 of the cooling hole 30 helps keep a coolant velocity of the coolant flow 52 and a gas velocity of the hot combustion gases along the external surface 43 of the pressure sidewall 42 at the breakout about equal to minimize aero losses which could result in a negative effect on turbine efficiency. These two features also help keep the coolant flow 52 flow attached in the slot 66.

Referring to FIGS. 6, 7, and 10, the aerodynamically shaped plugs 110 disposed in the cooling holes 30 are extended plugs which extend further downstream through at least a portion of the diverging sections 102 and at least a portion of the trailing edge cooling slots 66.

The plug creates an aerodynamic flow blockage in the diffusing section, i.e., reduced flow area for a given coolant flow rate. This allows the diffuser expansion angle to be increased, and still maintain stable, attached flow in the diffuser. The higher diffuser expansion results in a smaller hot land surface area and larger cold slot floor surface area. The plug also keeps the coolant velocity up at the slot exit. For the same coolant flow rate, a diffuser without a plug has a lower slot exit velocity than one with a plug. This is important for limiting the aerodynamic losses due to mixing of the hot gas and coolant streams, which is a function of the ration of coolant velocity to external gas velocity. The closer this ratio is to 1, the lower the mixing loss. The plug aids in keeping cooling flow velocity high, while still reducing the cooling flow. The plug sets up a very favorable flow angle and vortex condition for pushing coolant flow onto the deck giving much higher land film effectiveness. The extended plug accentuates this effect.

The plug 110 is designed to improve the diffuser performance of the diverging sections 102 of the cooling holes 30. The plug helps stabilize internal flow in the diverging sections. The

plug have many aerodynamic shapes including lobed shapes with side trenches below the mean level of the slot floor, depending on design needs and the intended flow area variation, to maintain internal flow attachment. The diffusing diverging section maintains stable flow expansion at a specific combination of wall diffusion angle, diffusion length, and shape of the internal part of the plug.

The diverging sections 102 of the cooling holes 30 set up a spreading exit flow angle at cooling hole exit to the slot 66. The deck 130 eliminates conventional lands, which tend to be the hottest parts of the trailing edge. Hence, the cold slot floor area is maximized. The swept boat tails 88 are designed to reduced aerodynamic losses and facilitate flow spreading past the breakout 58.

The present invention has been described in an illustrative manner. It is to be understood that the terminology which has been used is intended to be in the nature of words of description rather than of limitation. While there have been described herein, what are considered to be preferred and exemplary embodiments of the present invention, other modifications of the invention shall be apparent to those skilled in the art from the teachings herein and, it is, therefore, desired to be secured in the appended claims all such modifications as fall within the true spirit and scope of the invention.

Accordingly, what is desired to be secured by Letters Patent of the United States is the invention as defined and differentiated in the following claims:

CLAIMS

1. A gas turbine engine turbine airfoil (12) comprising:

widthwise spaced apart pressure and suction sidewalls (42, 44) extending outwardly along a span (S) from an airfoil base (34) to an airfoil tip (36);

the pressure and suction sidewalls (42, 44) extending chordwise (C) between opposite leading and trailing edges (LE, TE);

a spanwise row (38) of spanwise spaced apart trailing edge cooling holes (30) encased in the pressure sidewall (42);

all or a plurality of the cooling holes (30) ending at a single spanwise extending trailing edge cooling slot (66) extending chordally substantially to the trailing edge (TE);

each of the cooling holes (30) including in downstream serial cooling flow relationship, a curved inlet (70), a metering section (100) with a constant area and constant width flow cross section (74), and a spanwise diverging section (102) leading into the trailing edge cooling slot (66);

axial partitions (68) extending chordally between and radially separating the cooling holes (30) along the span (S); and

aft ends (86) of the partitions (68) including swept boat tails (88).

2. The airfoil (12) as claimed in claim 1 further comprising a spanwise heights (H) substantially greater than hole widths (W) through the cooling holes (30).

3. The airfoil (12) as claimed in claim 1 further comprising pressure and suction sidewall surfaces (39, 40) of the pressure and suction sidewalls (42, 44) respectively in the hole (30) and the pressure sidewall surface (39) being planar through the entire metering and diverging sections (100, 102).

4. The airfoil (12) as claimed in claim 3 further comprising the width (W) being constant through the metering and diverging sections (100, 102) of the hole (30).

5. The airfoil (12) as claimed in claim 1 further comprising:

a deck (130) in the slot (66) extending chordwise or downstream from the diverging sections (102) of the cooling holes (30) substantially to the airfoil trailing edge (TE),

the deck (130) extending spanwise or radially outwardly from a bottommost one (132) to a topmost one (134) of the trailing edge cooling holes (30),

upper and lower deck sidewalls (136, 138) spanwise bounding the deck (130) and extending from the deck (130) to an external surface (43) of the pressure sidewall (42), and

fillets (62) in slot corners (64) between the upper and lower deck sidewalls (136, 138) and the deck (130).

6. The airfoil (12) as claimed in claim 5 further comprising the fillets (62) having fillet radii (RF) substantially the same size as bottom corner radii (RT) of the flow cross section (74) of the diverging sections (102) adjacent the bottom corner radii (RT).

7. The airfoil (12) as claimed in claim 4 further comprising:

the diverging section (102) having a race track shaped flow cross section (74),

the race track shaped flow cross section (74) including a rectangular section (75) between spanwise spaced apart rounded or semi-circular inner and outer end sections (82, 84) having radii (R),

a deck (130) in the slot (66) extending chordwise or downstream from the diverging sections (102) of the cooling holes (30) substantially to the airfoil trailing edge (TE),

the deck (130) extending spanwise or radially outwardly from a bottommost one (132) to a topmost one (134) of the trailing edge cooling holes (30), upper and lower deck sidewalls (136, 138) spanwise bounding the deck (130) and extending from the deck (130) to an external surface (43) of the pressure sidewall (42),

fillets (62) in slot corners (64) between the upper and lower deck sidewalls (136, 138) and the deck (130), and

the fillets (62) having fillet radii (RF) substantially the same size as the radii (R) of the flow cross section (74).

8. The airfoil (12) as claimed in claim 1 further comprising:

the boat tails (88) being swept,

each of the boat tails (88) including a boat tail trailing edge (90) having an apex (92) spanwise located between the pressure and suction sidewalls (42, 44),

the boat tail trailing edge (90) sweeping aftwardly or downstream from the apex (92), and

the boat tail trailing edge (90) sweeping from the apex (92) spanwise or radially outwardly to the pressure sidewall (42) and inwardly to the suction sidewall (44) from the apex (92).

9. The airfoil (12) as claimed in claim 8 further comprising the swept boat tails (88) including rounded cross sections (96) through the aft ends (86) of the partitions (68) between spanwise pairs (94) of adjacent cooling holes (30).

10. The airfoil (12) as claimed in claim 9 further comprising the metering and diverging sections (100, 102) having a hole height to hole width ratio (H/W) of the spanwise height (H) and the hole width (W) in a range of about 2:1 to 10:1.

11. The airfoil (12) as claimed in claim 9 further comprising pressure and suction sidewall surfaces (39, 40) of the pressure and suction sidewalls (42, 44) respectively in the hole (30) and the pressure sidewall surface (39) being planar through the entire metering and diverging sections (100, 102).

12. The airfoil (12) as claimed in claim 11 further comprising the width (W) being constant through the metering and diverging sections (100, 102) of the hole (30).

13. The airfoil (12) as claimed in claim 12 further comprising the inlet (70) being downstream converging or bellmouth shaped.

14. A gas turbine engine turbine airfoil (12) comprising:

widthwise spaced apart pressure and suction sidewalls (42, 44) extending outwardly along a span (S) from an airfoil base (34) to an airfoil tip (36);

the pressure and suction sidewalls (42, 44) extending chordwise (C) between opposite leading and trailing edges (LE, TE);

a spanwise row (38) of spanwise spaced apart trailing edge cooling holes (30) encased in the pressure sidewall (42) and ending at a single spanwise extending trailing edge cooling slot (66) extending chordally substantially to the trailing edge (TE);

each of the cooling holes (30) including in downstream serial cooling flow relationship, a curved inlet (70), a metering section (100), and a spanwise diverging section (102) leading into the trailing edge cooling slot (66);

axial partitions (68) extending chordally between and radially separating the cooling holes (30) along the span (S); and

aft ends (86) of the partitions (68) including swept boat tails (88).

15. The airfoil (12) as claimed in claim 14 further comprising:

the boat tails (88) being swept,

each of the boat tails (88) including a boat tail trailing edge (90) having an apex (92) spanwise located between the pressure and suction sidewalls (42, 44),

the boat tail trailing edge (90) sweeping aftwardly or downstream from the apex (92), and

the boat tail trailing edge (90) sweeping from the apex (92) spanwise or radially outwardly to the pressure sidewall (42) and inwardly to the suction sidewall (44) from the apex (92).

16. The airfoil (12) as claimed in claim 15 further comprising the swept boat tails (88) including rounded cross sections (96) through the aft ends (86) of the partitions (68) between spanwise pairs (94) of adjacent cooling holes (30).

17. The airfoil (12) as claimed in claim 16 further comprising:

a deck (130) in the slot (66) extending chordwise or downstream from the diverging sections (102) of the cooling holes (30) substantially to the airfoil trailing edge (TE),

the deck (130) extending spanwise or radially outwardly from a bottommost one (132) to a topmost one (134) of the trailing edge cooling holes (30), upper and lower deck sidewalls (136, 138) spanwise bounding the deck (130) and extending from the deck (130) to an external surface (43) of the pressure sidewall (42), and

fillets (62) in slot corners (64) between the upper and lower deck sidewalls (136, 138)

and the deck (130).

18. The airfoil (12) as claimed in claim 17 further comprising the fillets (62) having fillet radii (RF) substantially the same size as bottom corner radii (RT) of the flow cross section (74) of the diverging sections (102) adjacent the bottom corner radii (RT).

19. The airfoil (12) as claimed in claim 16 further comprising:

the diverging section (102) having a race track shaped flow cross section (74),

the race track shaped flow cross section (74) including a rectangular section (75) between spanwise spaced apart rounded or semi-circular inner and outer end sections (82, 84) having radii (R),

a deck (130) in the slot (66) extending chordwise or downstream from the diverging sections (102) of the cooling holes (30) substantially to the airfoil trailing edge (TE),

the deck (130) extending spanwise or radially outwardly from a bottommost one (132) to a topmost one (134) of the trailing edge cooling holes (30), upper and lower deck sidewalls (136, 138) spanwise bounding the deck (130) and extending from the deck (130) to an external surface (43) of the pressure sidewall (42),

fillets (62) in slot corners (64) between the upper and lower deck sidewalls (136, 138) and the deck (130), and

the fillets (62) having fillet radii (RF) substantially the same size as the radii (R) of the flow cross section (74).

20. The airfoil (12) as claimed in claim 19 further comprising the metering and diverging sections (100, 102) having a hole height to hole width ratio (H/W) of the spanwise height (H) and the hole width (W) in a range of about 2:1 to 10:1.

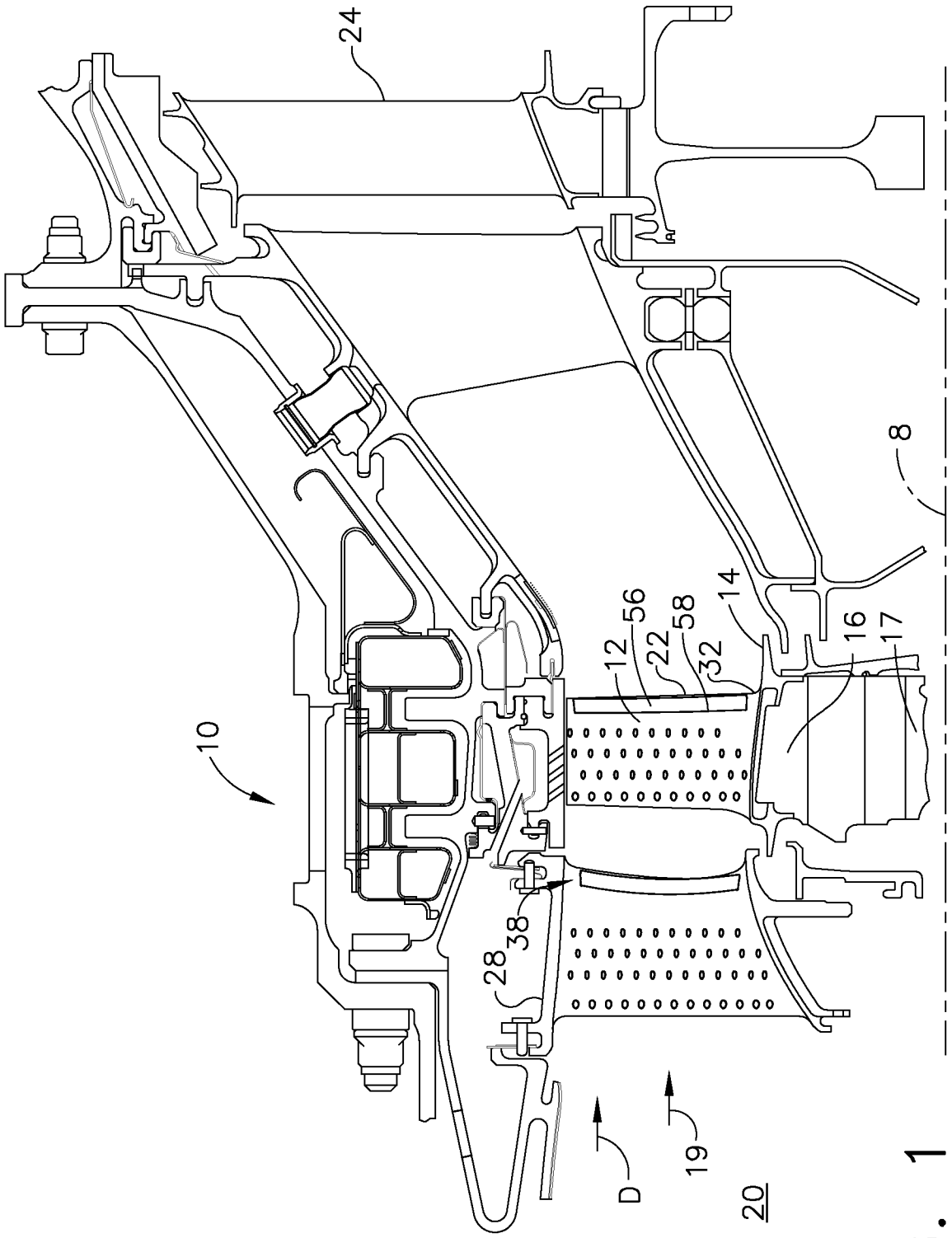

FIG. 1

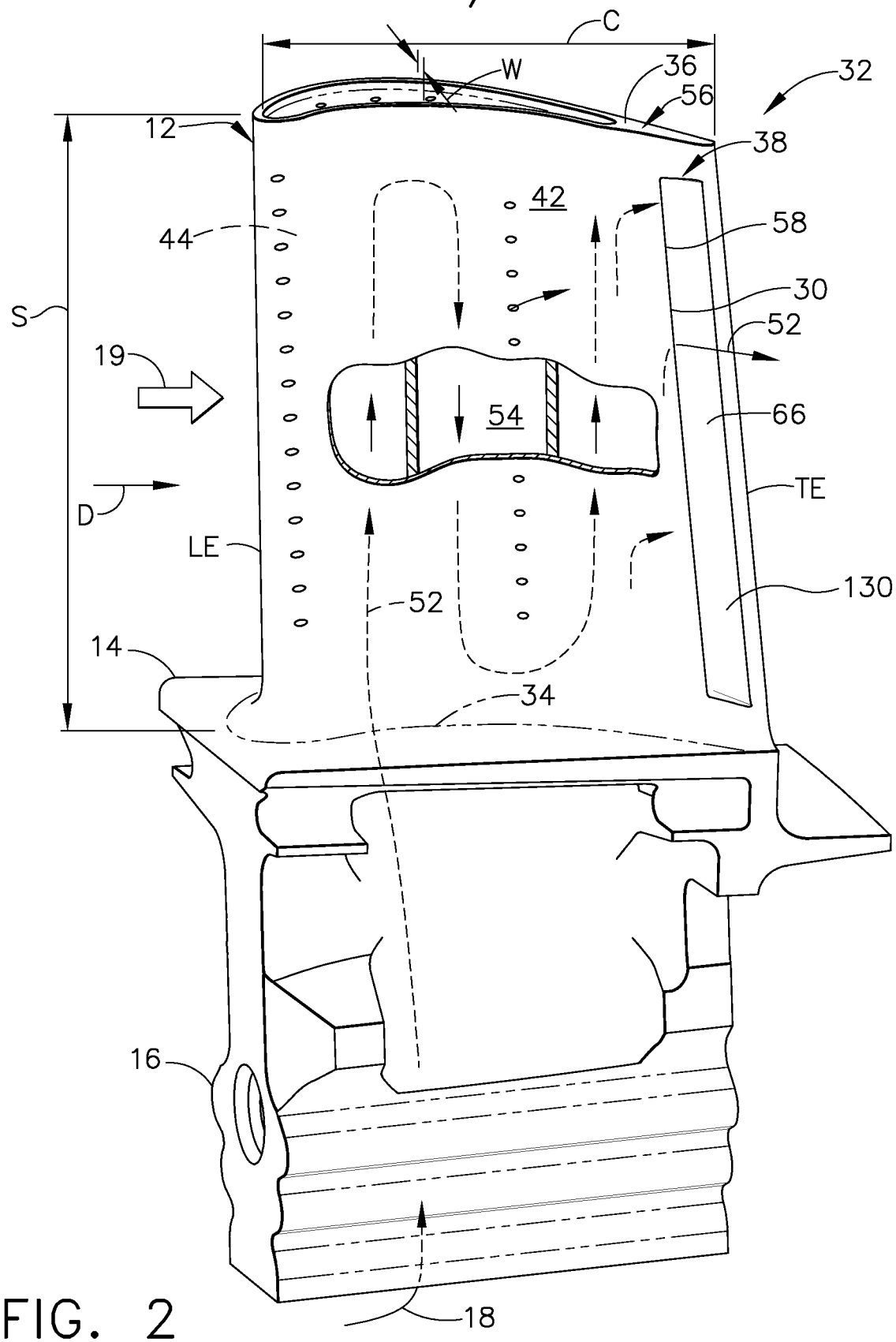

FIG. 2

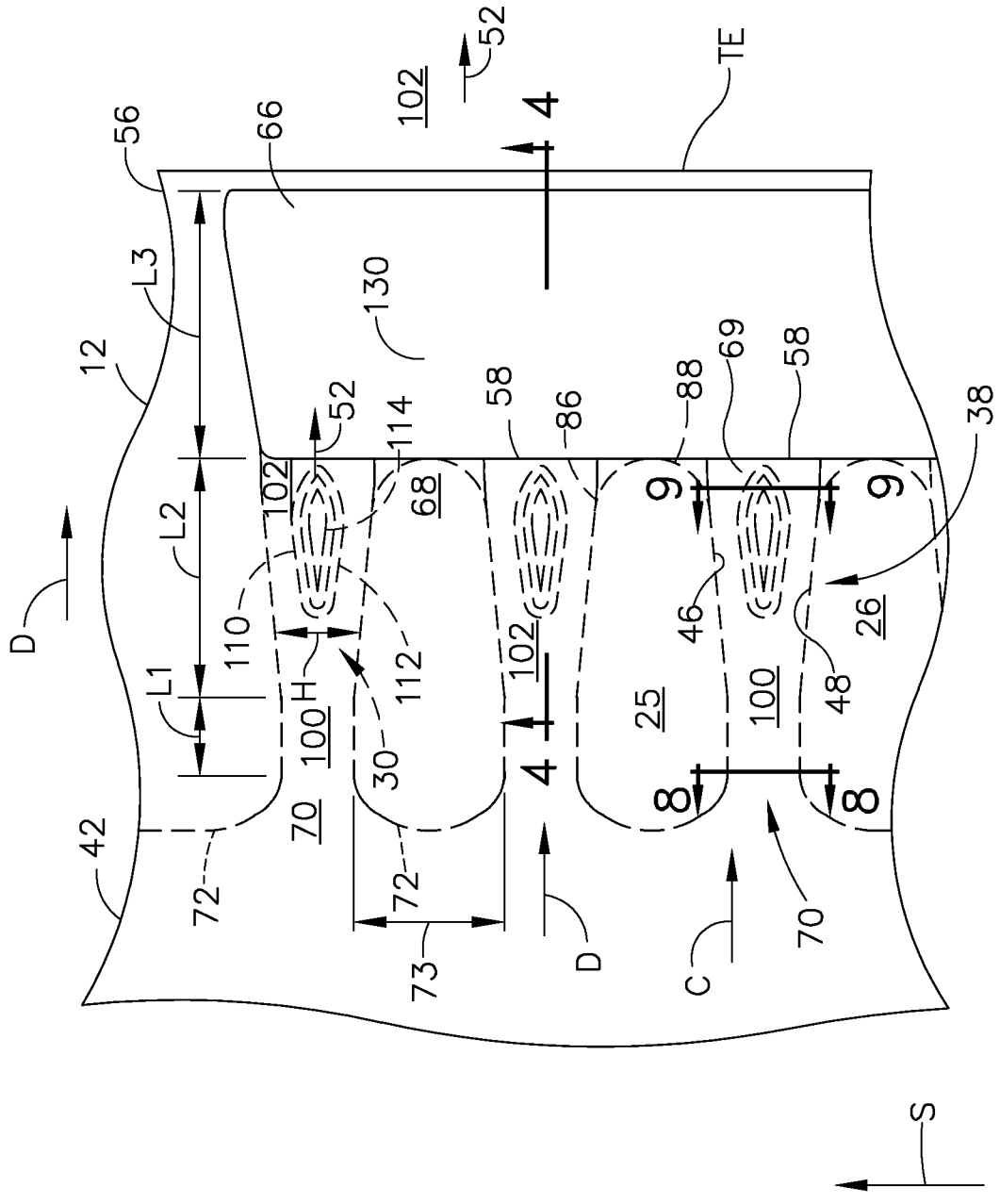

52
102
TE
4
56
66
L3
130
12
52
114
58
86
88
69
58
38
102
68
9
9
L2
D
110
112
102
46
26
L1
H
100
30
25
100
48
4
8
8
42
70
72
72
73
D
C
70
S

FIG. 3

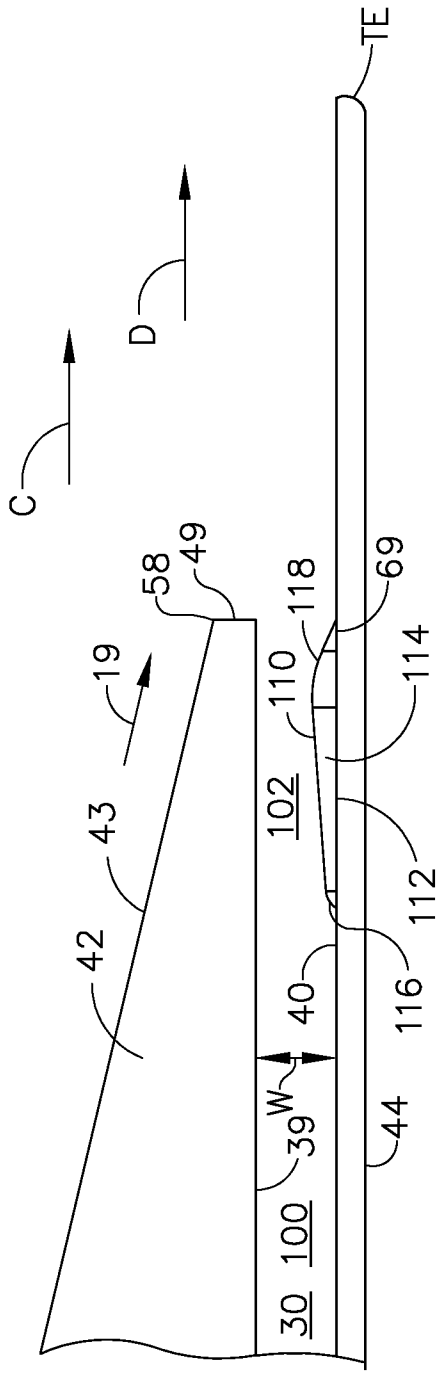

FIG. 4

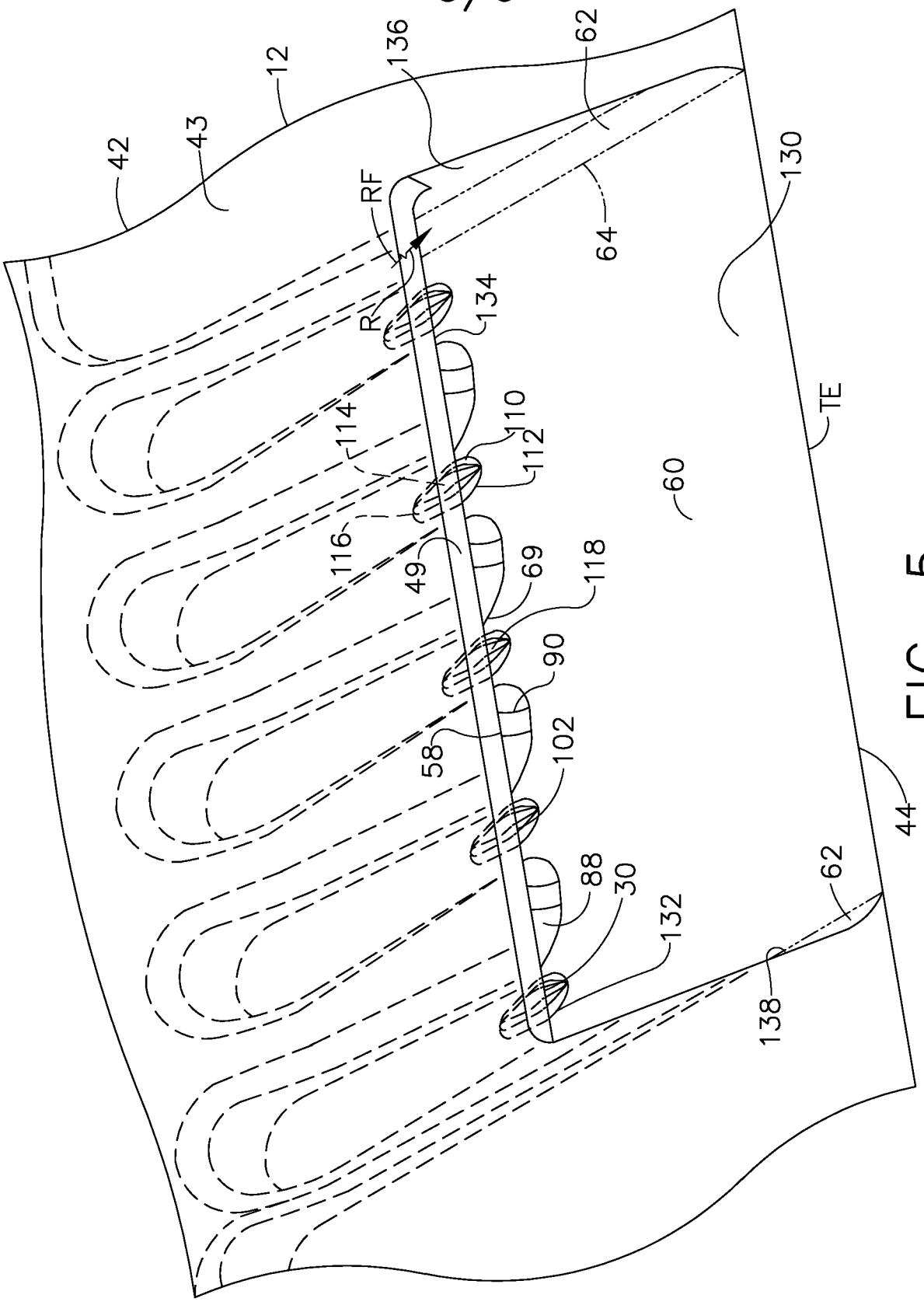
42
43
12
136
62
RF
64
130
R
134
114
110
112
TE
60
116
49
69
118
90
58
102
44
88
30
62
132
138

FIG. 5

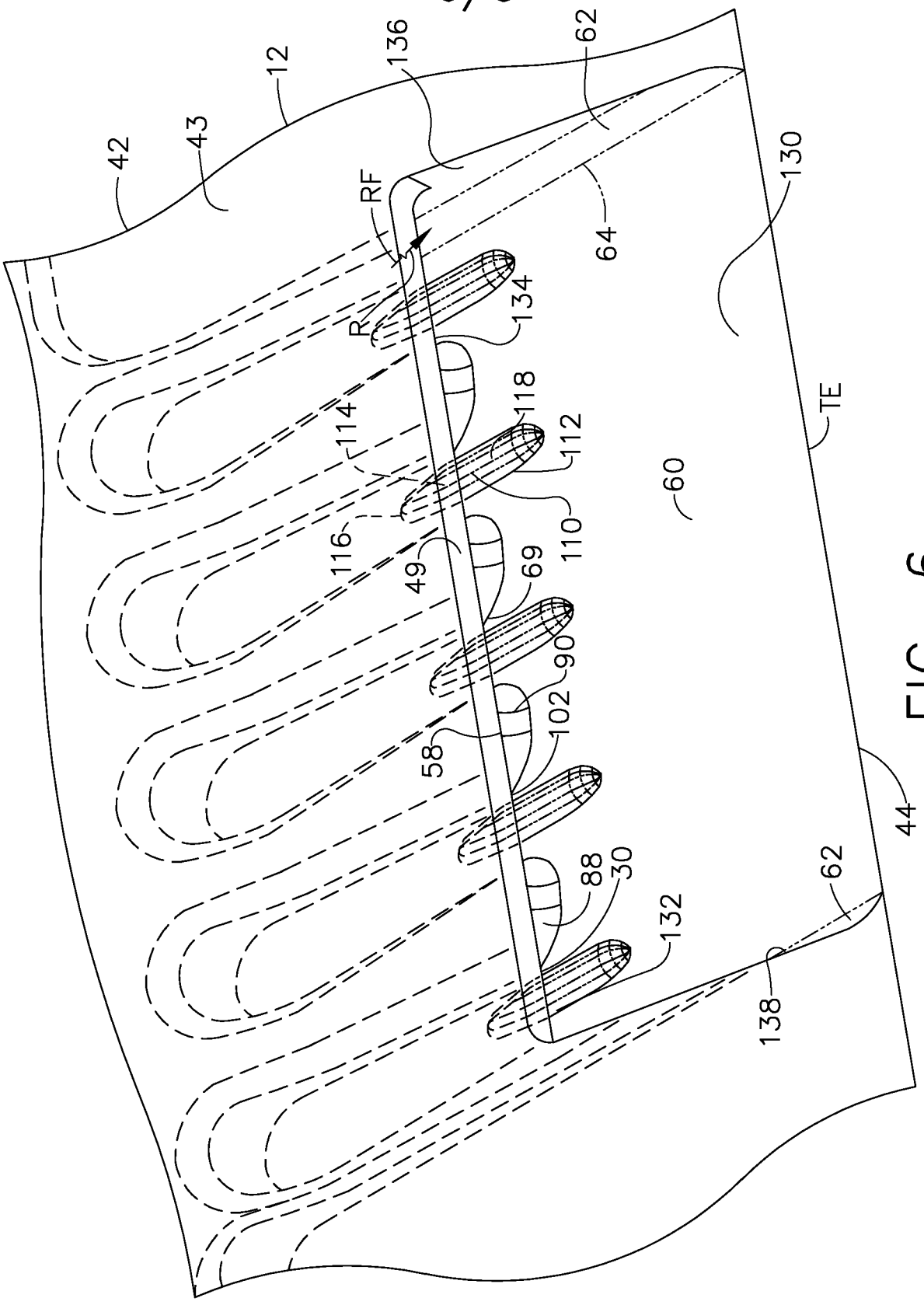
42
43
12
136
62
RF
64
130
R
134
118
114
112
TE
60
116
110
49
69
90
102
58
88
30
132
62
44
138

FIG. 6

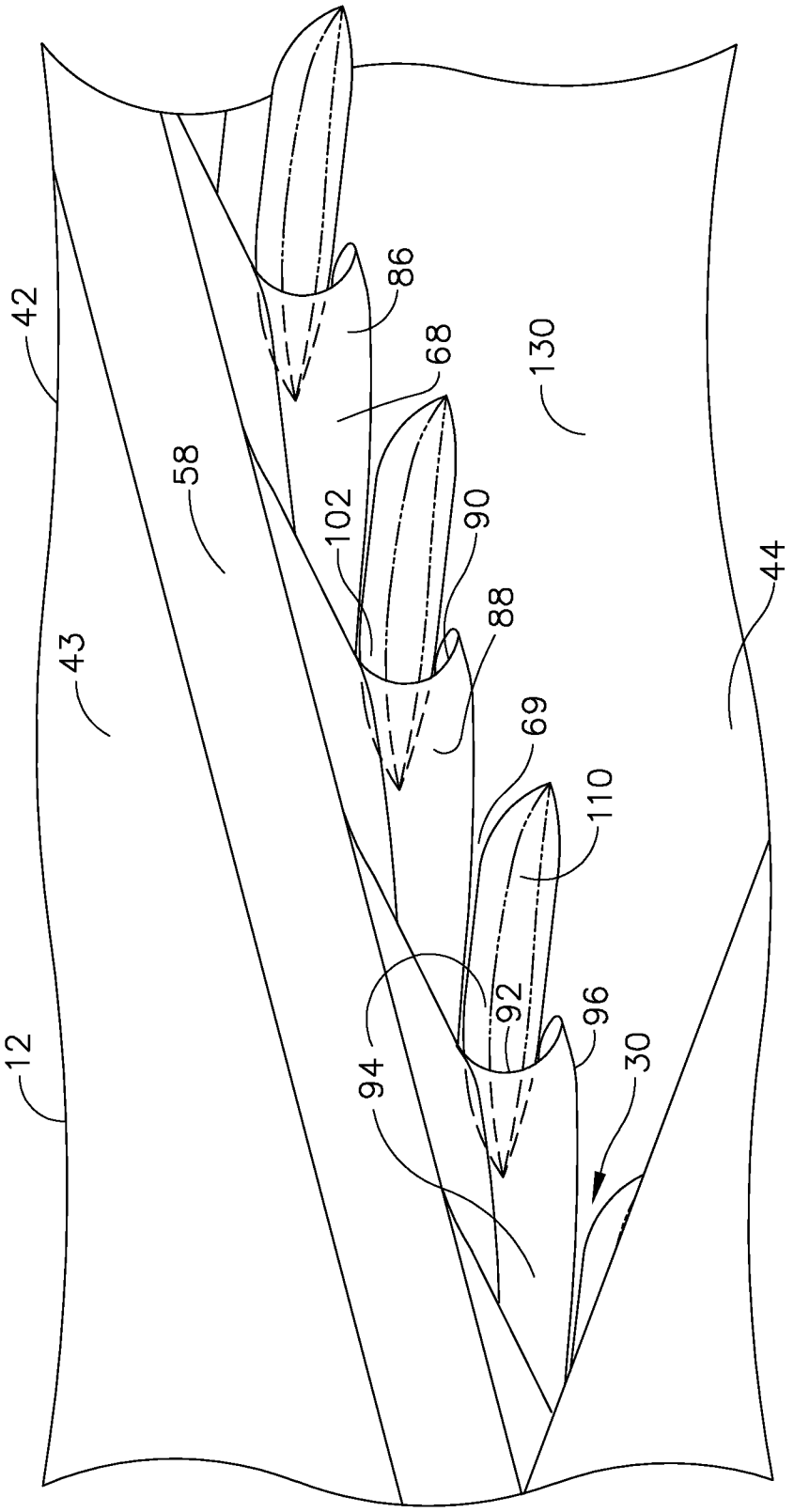

FIG. 7

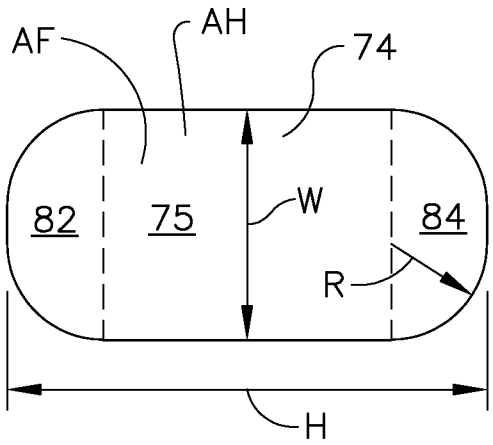

FIG. 8

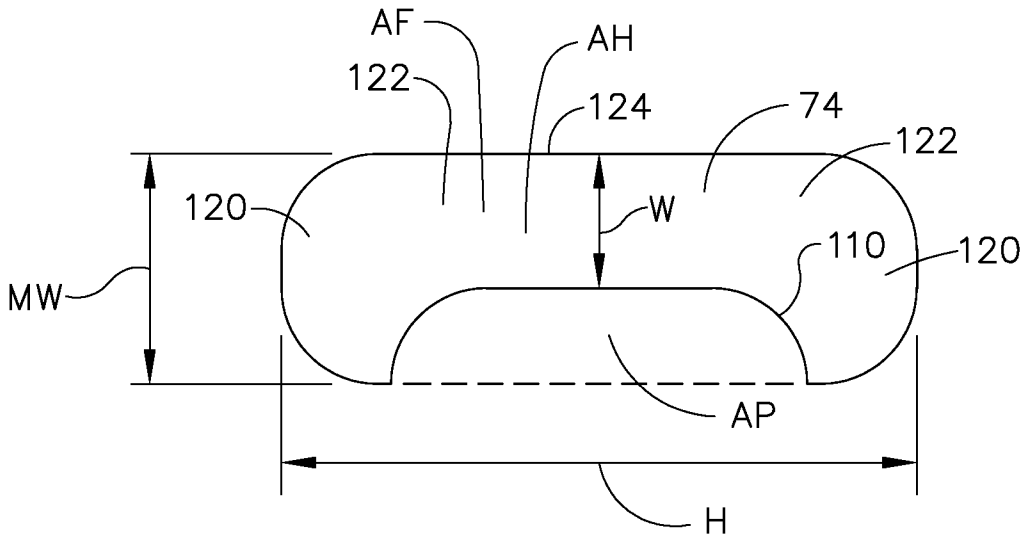

FIG. 9

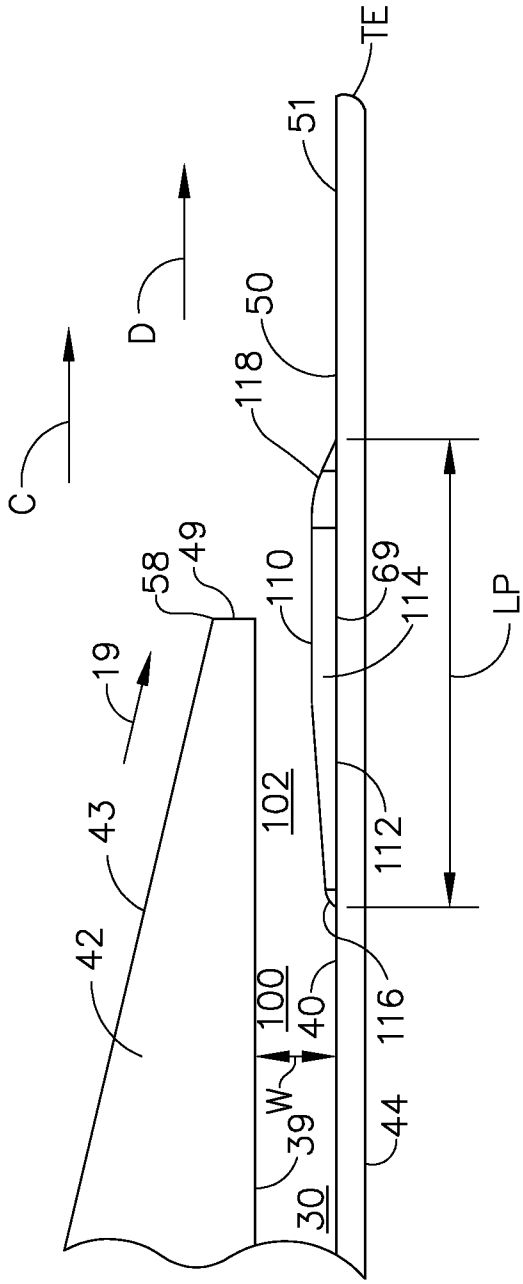
TE
51
D
50
C
118
58
49
110
69
114
LP
19
43
102
112
42
100
40
116
W
39
44
30

FIG. 10

INTERNATIONAL SEARCH REPORT

International application No
PCT/US2013/036319

A. CLASSIFICATION OF SUBJECT MATTER
INV. F01D5/18
ADD.

According to International Patent Classification (IPC) or to both national classification and IPC

B. FIELDS SEARCHED

Minimum documentation searched (classification system followed by classification symbols)
F01D

Documentation searched other than minimum documentation to the extent that such documents are included in the fields searched

Electronic data base consulted during the international search (name of data base and, where practicable, search terms used)
EPO-Internal, WPI Data

C. DOCUMENTS CONSIDERED TO BE RELEVANT

Category*	Citation of document, with indication, where appropriate, of the relevant passages	Relevant to claim No.
X	GB 2 036 884 A (GEN ELECTRIC) 2 July 1980 (1980-07-02) page 1, line 91 - page 2, line 105; figures 2-4	1-5,14
X	US 2011/085915 A1 (KRUECKELS JOERG [CH] ET AL) 14 April 2011 (2011-04-14) columns 23-29	1-4,14
A	EP 1 213 442 A1 (UNITED TECHNOLOGIES CORP [US]) 12 June 2002 (2002-06-12) columns 39-45	1,14

☐ Further documents are listed in the continuation of Box C.

☒ See patent family annex.

* Special categories of cited documents :

"A" document defining the general state of the art which is not considered to be of particular relevance

"E" earlier application or patent but published on or after the international filing date

"L" document which may throw doubts on priority claim(s) or which is cited to establish the publication date of another citation or other special reason (as specified)

"O" document referring to an oral disclosure, use, exhibition or other means

"P" document published prior to the international filing date but later than the priority date claimed

"T" later document published after the international filing date or priority date and not in conflict with the application but cited to understand the principle or theory underlying the invention

"X" document of particular relevance; the claimed invention cannot be considered novel or cannot be considered to involve an inventive step when the document is taken alone

"Y" document of particular relevance; the claimed invention cannot be considered to involve an inventive step when the document is combined with one or more other such documents, such combination being obvious to a person skilled in the art

"&" document member of the same patent family

Date of the actual completion of the international search	Date of mailing of the international search report
11 June 2013	18/06/2013

Name and mailing address of the ISA/	Authorized officer
European Patent Office, P.B. 5818 Patentlaan 2 NL - 2280 HV Rijswijk Tel. (+31-70) 340-2040, Fax: (+31-70) 340-3016	Pileri, Pierluigi

INTERNATIONAL SEARCH REPORT

Information on patent family members

International application No
PCT/US2013/036319

Patent document cited in search report	Publication date	Patent family member(s)	Publication date
GB 2036884 A	02-07-1980	CA 1131563 A1	14-09-1982
		DE 2930949 A1	03-07-1980
		FR 2444158 A1	11-07-1980
		GB 2036884 A	02-07-1980
		IL 57468 A	15-05-1983
		IT 1122425 B	23-04-1986
		JP S5584803 A	26-06-1980
		JP S6237201 B2	11-08-1987
		US 4303374 A	01-12-1981
US 2011085915 A1	14-04-2011	EP 2252771 A1	24-11-2010
		JP 2011513636 A	28-04-2011
		US 2011085915 A1	14-04-2011
		WO 2009109462 A1	11-09-2009
EP 1213442 A1	12-06-2002	NONE	