Sept. 30, 1952 J. A. KIRKPATRICK 2,612,414

BRACE BRACKET FOR SCAFFOLDS AND THE LIKE

Filed Nov. 21, 1950

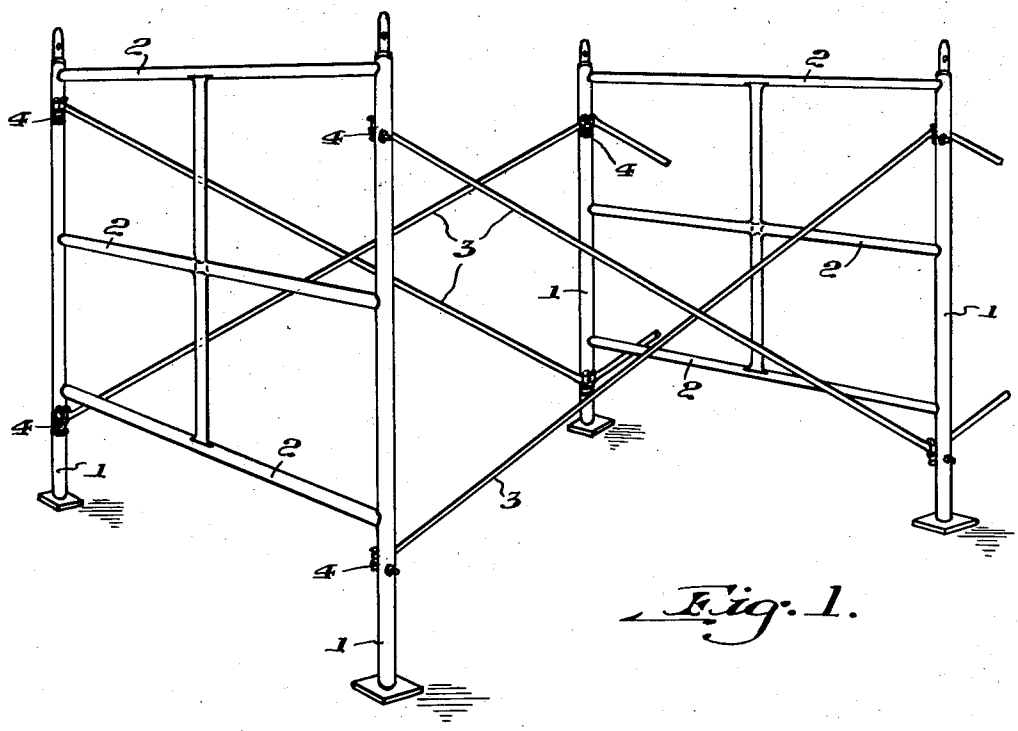

Fig. 1.

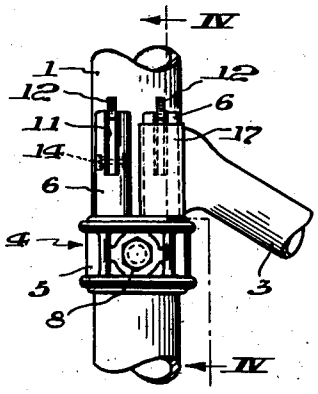

Fig. 2.

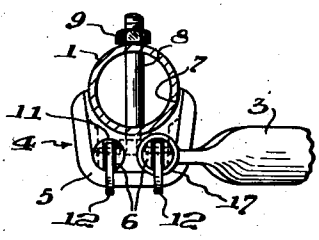

Fig. 3.

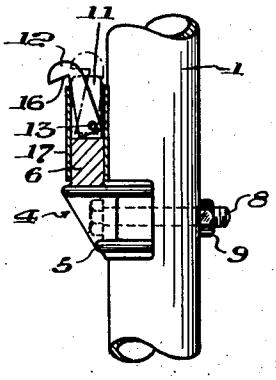

Fig. 4.

INVENTOR.
John A. Kirkpatrick
BY
Brown, Critchlow, Flick & Peckham
his ATTORNEYS

Patented Sept. 30, 1952 2,612,414

UNITED STATES PATENT OFFICE

2,612,414

BRACE BRACKET FOR SCAFFOLDS AND THE LIKE

John A. Kirkpatrick, Zelienople, Pa., assignor to Universal Manufacturing Corp., Zelienople, Pa., a corporation of Pennsylvania

Application November 21, 1950, Serial No. 196,832

4 Claims. (Cl. 304—40)

1

This invention relates to the bracing of metal scaffolds, bleachers and the like, and more particularly to the brackets by which braces are detachably connected to the legs of such structures. For the sake of illustration this invention will be described as applied to metal scaffolds formed from spaced end panels that are connected by removable braces, but it is not limited thereto.

It is among the objects of this invention to provide such bracing wherein the braces are detachably connected to brackets which are bolted to the legs of scaffolds or the like, which can be applied to the inner sides of end panel legs, which are inexpensive to make and apply, which automatically lock the braces in place, and which permit the braces to be rotated in a horizontal plane around the brackets.

According to this invention the bracket includes a supporting member that is formed for attachment to the side of a leg that is to be braced. Preferably, the supporting member is shaped to fit part way around the leg and is provided with a transverse hole for receiving a bolt or rivet that fastens it to the leg. Extending upward from the supporting member, and preferably integral with it, is a vertical pin. This pin is designed to have the perforated end of a brace slid down over it. A locking member projects laterally at the upper end of the pin and is movable into and out of a position in which it will overlie the brace to hold it down on the pin. The locking member preferably is a latch which is pivotally mounted in a vertical slot in the pin, the upper end of the latch having a lateral projection that normally swings outward by gravity to overlie the brace. The bracket may be made of a casting and be provided with a pair of laterally spaced pins so that two braces can be attached to each bracket.

The preferred embodiment of the invention is illustrated in the accompanying drawings, in which Fig. 1 is a perspective view of a section of a scaffold provided with my bracing; Fig. 2 is an enlarged front view of one of the brackets; Fig. 3 is a horizontal section through a leg, showing a bracket from above; and Fig. 4 is a combination side view and section of the bracket taken on the line IV—IV of Fig. 2.

Referring to Fig. 1 of the drawings, each of a pair of vertical prefabricated scaffold end frames of any suitable construction has tubular legs 1 that may be rigidly connected by horizontal cross members 2, upon which wooden planking (not shown) may be placed to form a working platform. When the scaffold is assembled the end

2

frames are held upright by means of crossed, inclined side braces 3. In order to detachably connect the ends of the braces to the scaffold legs, brackets 4 are fastened to each leg near its upper and lower ends. The brackets preferably are mounted on the inside of each leg; i. e., the side of the leg nearest to the other leg of the same frame.

Each bracket 4 preferably is formed from a metal casting, the lower portion of which is a supporting member 5 for two laterally spaced cylindrical pins 6 extending upward from it in parallel relation. One side of the supporting member is provided with a semicircular recess 7 (Fig. 3) that allows the member to fit about halfway around the adjoining leg of the scaffold. The central part of the supporting member is provided with a transverse hole for receiving a bolt 8 that extends horizontally through the leg. A nut 9 on the outer end of the bolt holds the head of the bolt against the bracket and thereby attaches it to the leg.

Each of the bracket pins 6 is provided with a vertical slot 11 extending diametrically through it and downward from its upper end for about half the length of the pin. The exact length of the slot is not material. Loosely disposed in the slot is a latch 12, the lower end of which is pivotally mounted on a rivet 13 extending across the lower portion of the slot near one side of the pin. The pin is provided with small recesses 14 (Fig. 2) for receiving the heads of the rivet so that they will not project out beyond the surface of the pin. The latch preferably projects above the top of the pin and has a convex upper surface. No part of the latch is wider than the pin. The side of the latch opposite to the rivet is provided with a notch 16, the upper wall of which is substantially horizontal when the latch is upright, as shown in broken lines in Fig. 4. The inner wall of the notch is inclined from the inner end of its upper wall downward to the wide lower end of the latch. The notch reduces the width of a portion of the latch so that it can swing outward even though the pin is surrounded by the end of a brace 3, as shown in Fig. 4. The notch also forms a projection or nose between the top of the notch and the top of the latch, which projects laterally from the side of the pin when the latch is in its outer position. Due to the location of the latch pivot at one side of the center of gravity of the latch, the latch normally will swing away from rivet 13 by gravity, as shown in full lines in Fig. 4. Outward movement of the latch is limited, when a brace sleeve is not encircling the

pin, by engagement of the corner of the latch beneath the notch with the lower wall of the slot.

The inclined side braces 3 that are connected to the bracket pins may be formed from lengths of pipe which have their ends pinched together and welded to short lengths of pipe that form vertical sleeves 17. These sleeves slide down over the pins and rest on supporting members 5. The upper ends of the latches then swing outward by gravity to keep the braces from accidentally being removed from the pins. When it is desired to disconnect the braces from the legs, the upper ends of the bracket latches are pushed back manually to the broken line position of Fig. 4, so that the braces can be slid up over the upper end of the latches and lifted from the bracket pins.

It will be seen that in this bracing the braces are locked on the brackets by latches that automatically swing out into locking position by gravity as soon as the brace sleeves pass down over them. The braces then can not be removed from the brackets until the latches have been swung manually into upright position. The locking mechanism is of simple construction and there is nothing about it to get out of order or to cause it to fail to operate. Since the sleeves at the ends of the braces are short, they do not extend very far above the brackets when lifted therefrom, with the result that the brackets can be mounted on the inside of the scaffold legs close to horizontal cross members 2. In addition to the simplicity and low cost of this bracing, another advantage is that the braces can be swung horizontally around the bracket pins. This permits an assembled scaffold to be reduced in width for a narrow space by moving the legs at one side of the scaffold horizontally in one direction relative to the legs at the other side of the scaffold. Also, such a scaffold does not have to be assembled in a straight line.

If it is desired to use horizontal side braces or diagonal braces in addition to the inclined braces, that can be done by providing the brackets with pins long enough to receive both types of braces.

According to the provisions of the patent statutes, I have explained the principle of my invention and have illustrated and described what I now consider to represent its best embodiment. However, I desire to have it understood that, within the scope of the appended claims, the invention may be practiced otherwise than as specifically illustrated and described.

I claim:

1. A bracket for detachably connecting a brace having a perforated end to a leg of a scaffold and the like, the bracket comprising a supporting member formed for attachment to the side of said leg, a vertical pin extending upward from said member and adapted to have the end of a brace slid down over it, the pin being provided with a slot extending downward from its upper end, and a latch pivotally mounted in the slot and having a lateral projection at its upper end for overlying the brace to lock it on the pin when the latch swings outward in the slot.

2. A bracket for detachably connecting a brace having a perforated end to a leg of a scaffold and the like, the bracket comprising a supporting member formed for attachment to the side of said leg, a vertical pin extending upward from said member and adapted to have the end of a brace slid down over it, the pin being provided with a slot extending downward from its upper end, a latch disposed in the slot and having a lateral projection at its upper end, and a pivot connecting the lower end of the latch to the pin at a point that causes said projection to swing outward away from the pin by gravity, whereby the projection will overlie the end of the brace and hold it down on the pin.

3. A bracket for detachably connecting braces having perforated ends to a leg of a scaffold and the like, the bracket comprising a supporting member curved to fit part way around said leg and having a transverse hole adapted to receive a fastening member for attaching said member to the leg, a pair of laterally spaced pins extending upward from the top of said member and each adapted to have the end of a brace slid down over it, each pin being provided with a slot extending downward from its upper end, a latch disposed in the slot and having a lateral projection at its upper end, and a pivot connecting the lower end of the latch to the pin at a point that causes said projection to swing outward away from the pin by gravity, whereby the projection of the latch will overlie the end of the brace mounted on the pin that supports said latch.

4. In scaffold bracing and the like, a bracket formed for attachment to a vertical leg and having a vertical cylindrical pin extending upward, a brace having a vertical sleeve at its end for sliding down over said pin, the pin being provided with a slot extending downward from its upper end, and a latch pivotally mounted in the slot and having a lateral projection at its upper end for overlying said sleeve to hold it down on the pin when the latch swings outward in the slot.

JOHN A. KIRKPATRICK.

REFERENCES CITED

The following references are of record in the file of this patent:

UNITED STATES PATENTS

Number	Name	Date
127,100	Patton	May 21, 1872
932,570	Perrine	Aug. 31, 1909
1,618,348	Nicolai	Feb. 22, 1927
1,819,031	Kuhlman	Aug. 18, 1931
2,118,467	Jones	May 24, 1938
2,435,171	Weisz	Jan. 27, 1948
2,452,461	Harris	Oct. 26, 1948

FOREIGN PATENTS

Number	Country	Date
20,633	Great Britain	1903