Feb. 16, 1943. H. M. HUCKE 2,311,608

STATIC DISCHARGE DEVICE

Filed May 10, 1940 2 Sheets-Sheet 1

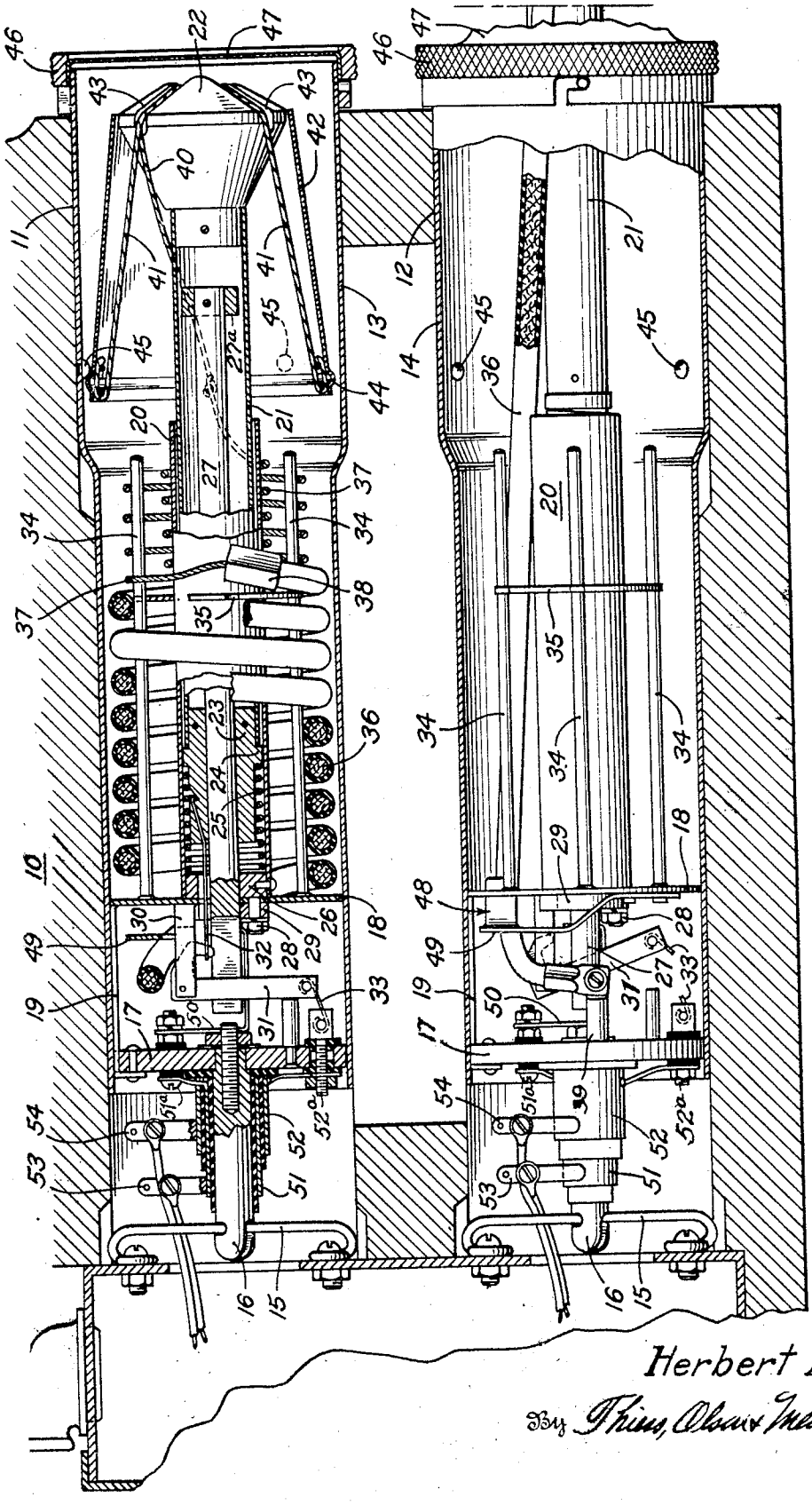

Fig. 1.

Inventor.

Herbert M. Hucke

By Thiess, Olson & Mecklenburger.

Attorneys.

Feb. 16, 1943. H. M. HUCKE 2,311,608

STATIC DISCHARGE DEVICE

Filed May 10, 1940 2 Sheets-Sheet 2

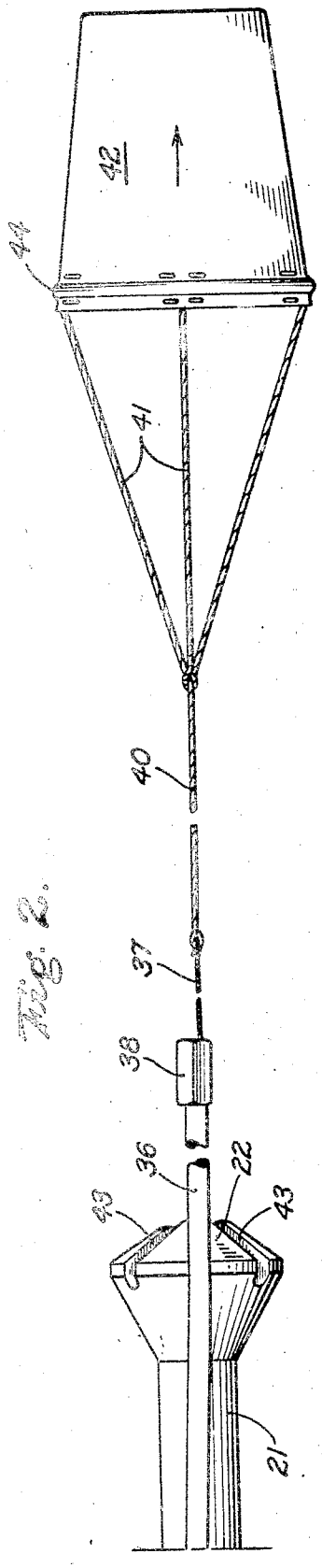

Fig. 2.

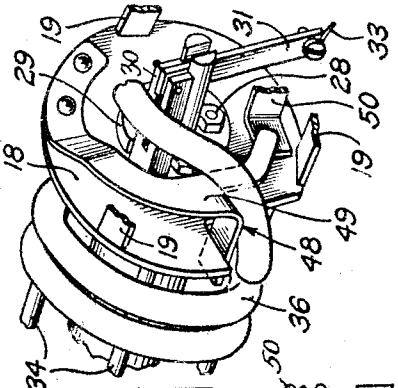

Fig. 4.

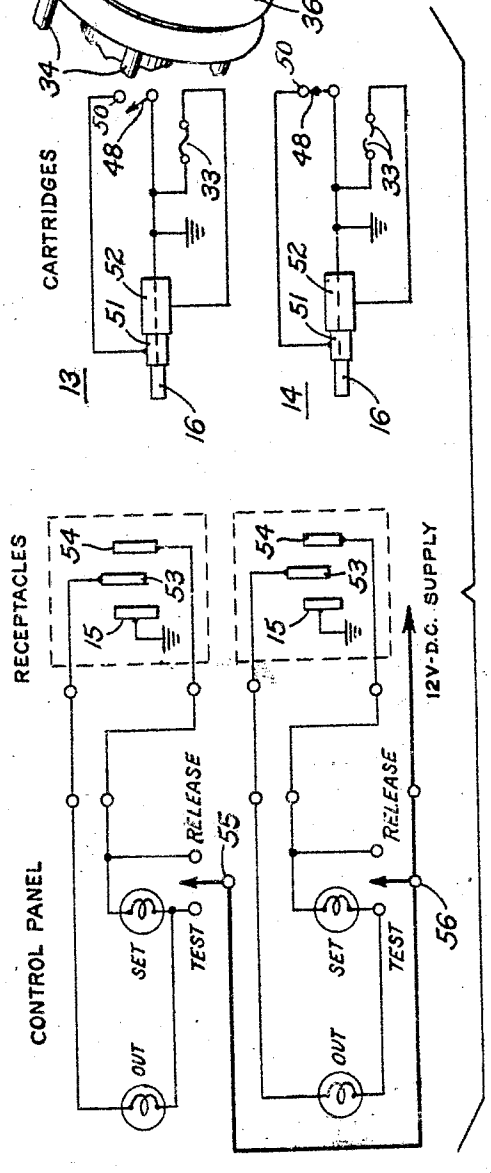

Fig. 3.

Inventor.

Herbert M. Hucke

By Thiess Olsen & Muckelbauer.

Attorneys.

Patented Feb. 16, 1943 2,311,608

UNITED STATES PATENT OFFICE

2,311,608

STATIC DISCHARGE DEVICE

Herbert M. Hucke, Arlington, Va., assignor to United Air Lines Transport Corporation, Chicago, Ill., a corporation of Delaware

Application May 10, 1940, Serial No. 334,419

12 Claims. (Cl. 175—264)

This invention relates to the subject of static dissipation and more particularly to the discharging of static electricity from aircraft during flight.

Pilots flying under certain atmospheric conditions, such as snow, dust and rain storms, have experienced extreme difficulty in receiving of radio range signals and communication from the ground due to the presence of a unique static condition, as a result of which intelligible signals are often completely masked, rendering radio reception extremely difficult and often impossible. Due to the importance of radio as a means of communication with the ground and as an instrument of navigation, extended study has been made of the conditions producing static disturbances of the above types, which are often referred to as snow static. As a result of the investigation of the origin of snow static, it has been determined that a craft, in flying through the air, assumes a definite electrical potential with respect thereto, which potential may vary with atmospheric conditions and which may be on the order of thousands of volts. Charged particles of snow, rain, dust and other matter suspended in air, in striking the fuselage and wings of an all metal plane, impart their individual charges thereto and these accumulate and in serious conditions of snow static, the total charge on the craft becomes so great that salient points and surface parts of small diameter, such as propeller tips, wing tips, and the trailing edges of the wings and empennage, for example, go into corona and cause arcing over between different portions of the craft. The existence of arcs on the craft causes excessive interference with radio reception, and for the duration of the arcing condition renders radio receivers useless quite often at times when reception is of the greatest importance to the safety of the pilot and the passengers.

One solution which has been applied as a result of the above investigations, is the discharging of snow static at a point removed from and rearwardly of the craft. The excessive charge which causes arcing is led by means of a conductor of comparatively large diameter to the rear of the craft, a distance of about five feet, and it is then allowed to flow to a conductor of relatively fine gauge. The first conductor is made of such a diameter that it will not go into corona for the charges encountered, and the second conductor is made of a very small diameter, so that it will go into corona at a point substantially lower than the corona point of any portion of the aircraft. In order to damp oscillatory currents, a resistor is placed at some point between the craft and the conductors. The novel device of the present invention is well adapted to utilize this solution to the problem of static dissipation.

One of the objects of the present invention is to provide a mechanism capable of installation upon aircraft which will eliminate the interference due to snow static.

Another object of the invention is the provision of a novel mechanism by which the precipitation of static charges may be effected with facility and dependability.

Other objects of the invention include the provision of a novel mechanism for effecting static discharge, which can be easily installed upon a craft and stored until it is needed to discharge the craft, which can be readily operated by a pilot during flight, which gives an indication of operation to the pilot and which can be readily renewed and replaced.

Other objects will appear from a reading of the specification when studied in conjunction with the attached drawings in which like numerals refer to like parts throughout.

Fig. 1 represents the mechanism of one embodiment of the present invention, partly in cross-section and elevation as installed upon an aircraft;

Fig. 2 is a showing in elevation of a portion of the mechanism of the present invention as it appears when fully extended in flight;

Fig. 3 is a schematic diagram of the electric circuits used in the present invention; and

Fig. 4 is a detailed showing in perspective of a portion of the present invention.

In general terms, the present invention comprises a static discharge device which is mounted in compact form within a receptacle in a trailing portion of an aircraft and which, by means of a control panel at the pilot's position in conjunction with a novel indicating circuit, gives an indication as to the condition of the operativeness of the static discharge device. By means of a switch, the pilot places the discharge means in operation at any time that he encounters static conditions and he is constantly advised of the operation of the discharge device by a novel indicator within the cockpit.

Having reference to Fig. 1, 10 represents a receptacle in a trailing portion of an aircraft, such as the tail, having apertures 11 and 12 adapted to receive tubular metal cartridge or shell members 13 and 14. These cartridge members are identical and hereafter corresponding

parts of each will be identically numbered. One cartridge carries sufficient mechanism for satisfactory operation of the novel device of the present invention, but two cartridges may be provided for reasons to be described later. At the innermost end of receptacle 10 there are provided resilient locking means 15, which are not only fixed to the receptacle by any conventional means such as bolts, but which are also grounded electrically to the receptacle and the body of the aircraft. Plug member 16 is carried upon end wall 17 of each of the cartridges 13 and 14 and cooperates with locking member 15 so as to make a quick connect and disconnect arrangement. Mounted upon a transverse wall 18, which is spaced from wall 17 by straps 19, there is a cylindrical sleeve member 20 welded or otherwise attached to wall member 18 at one end. Slidable axially of sleeve 20 is a hollow tubular plunger member 21, having connected to one end an enlarged generally frustro-conical head 22, and at its other end an annular insert 23 having a shoulder 24 against which a helical spring 25 abuts. The other end of spring 25 is seated against a ring member 26, which is attached internally of sleeve 20 and rigidly connected, along with sleeve 20 to the transverse wall member 18. Concentrically with axially movable plunger 21, there is a rod member 27, rigidly connected to an annular collar 29 by welding or any suitable means, and the assembly of collar 29 and rod 27 is maintained in fixed position concentrically of plunger 21 by means of screws or studs 28 which engage with ring member 26 through transverse wall member 18. The annular insert 23 is slidable along the rod 27 to a rearward position in which it engages a collar member 27a secured to said rod at the rear end thereof. A pillar member 30, having an open, slotted end as shown more clearly in Fig. 4, is welded or otherwise fixed to wall member 18 and pivotally holds a latch or trigger 31. As shown in cartridge 13, latch or trigger member 31 engages with a wire yoke member 32 which is connected in any conventional manner to annular insert 23. Trigger 31 is maintained in engagement with wire yoke 32 by means of wire link 33 which is a relatively strong, yet fusible wire such as music wire on the order of .01 inch in diameter.

A series of longitudinal rods 34, concentric with rod member 27, are equi-distantly disposed about the surface of wall 18 and are rigidly welded, or otherwise attached thereto. In the embodiment shown, five of these rods are used and for a reason to be described later, any odd number of rods 34 may be used. These rods are also connected to a spacer member such as metal plate 35, in order to support them intermediate their ends, and rods 34 therefore act as a frame upon which is coiled an electrical conducting unit made up of a resistor 36 of a composition to be described later, and a fine wire 37 connected to one end of resistor 36, by any conventional connector, such as crimped metal member 38. The other end of electrical resistor 36 passes through a cutout portion of wall 18, which portion is shown most clearly in Fig. 4, and is connected to a terminal 39, which is electrically grounded to wall 17 and to the aircraft through plug 16. The outer end of wire 37 is connected, as shown in dotted lines, to a cord or other flexible member 40, which is connected to cord members 41, forming a bridle to which is attached a wind-cone 42.

In order to provide a positive seat for bridle member 41, head 22 is slotted as indicated at 43. Wind-cone 42 can be of any slightly resilient material, such as parchment, oil paper, etc., having an annular bead 44 adapted to cooperate with cam members 45 to retain wind-cone 42 in its normal position upon the plunger head 22.

An annular ring 46 is removably attached to cartridges 13 and 14 by means of a bayonet joint or any other conventional fastening means. Stretched across the mouth of cartridge 13 and retained in place by ring 46, is a frangible sealing member 47 of parchment, oiled paper, or the like, for keeping rain, snow and other foreign matter from entering the interior of the cartridge, and to prevent the formation of ice therein.

In the embodiment of the invention herein described, the diameter of resistor 36 is on the order of three-sixteenths of an inch, and the diameter of wire 37 may be on the order of two one-hundredths of an inch, but these approximate dimensions may, of course, vary with different installations and are such that for the charges expected to be encountered, no substantial corona discharge will occur along resistor 36 and practically all corona discharge will be confined to wire 37. Resistor 36 and wire 37 may each have a length on the order of five feet.

Resistor 36 is composed of a fibrous, flexible, rope-like material, such as jute or hemp, impregnated with colloidal graphite, such as commercially available under the name "Aquadag." Over this body of impregnated jute or hemp is placed, by extrusion, molding or any other process, a watertight covering of rubber or the like material. The whole assembly results in a novel type of resistor which may, depending upon the process of treatment, have a resistance on the order of fifty thousand ohms per foot of length.

As stated above, an odd number of rods 34 is provided. With this arrangement, wire 37 can be alternately woven within and without rods 34, as indicated in the cross-section of Fig. 1, and this arrangement provides an advantageous means for obviating the improper winding of wire 37 within the cartridge. With the arrangement shown, there can be no crossing over of turns and thus, when the wind-cone is projected into the slip-stream, wire 37 will be paid out without the possibility of knotting.

Spring 25 should have sufficient strength to be capable of ejecting plunger 21 in a forceful manner upon the fusing of wire link 33 and consequent release of yoke member 32 by trigger 31, so that the frangible diaphragm 47 may be easily broken and the wind-cone 42 projected safely into slip-stream, even though ice or other formation has completely covered the mouth of aperture 11 or 12. When plunger 21 reaches the end of its rearward movement, as limited by engagement of annular insert 23 with collar member 27a, wind-cone 42 is projected far enough into the slip-stream to exert the required tension to withdraw wire 37 and resistor 36 from the cartridge, and thereafter will maintain them in extended position.

A feature of the embodiment of the invention shown in Fig. 1, and more in detail in Fig. 4, is a tension switch indicated generally at 48, which, when resistor 36 and wire 37 are coiled within the tubular cartridge shell 13, is in open-circuit position. This switch will, as will now be described, move into closed-circuit position when the pilot actuates plunger 21, causing ejection of the coiled conductor assembly 36 and 37, so that resistor 36

and wire 37 are maintained taut in the slipstream of the craft by means of wind-cone 42. As shown in Fig. 4, resistor 36 passes over switch arm 49, which is made of any spring metal, and the tension of resistor 36, in its ejected position, causes spring switch arm 49 to be moved axially until it contacts terminal 50, thereby closing an indicating circuit to be described below.

The plug member 16 carries two insulated sleeve contacts 51 and 52 which, when in operative position, engage with suitable brushes such as 53 and 54, respectively. The sleeve contact 51 is electrically connected through an insulated stud member 51a to the contact member 50, and the sleeve contact 52 is connected through an insulated stud member 52a to the end of the wire link 33 opposite that which is connected to the trigger 31, which latter is grounded.

Having reference particularly to Fig. 3, there are shown electric circuits which not only enable the pilot to eject the static discharge conductor assembly, but also indicate the condition of the assembly before and after ejection. Duplicate circuits are provided for the cartridges 13 and 14, including test and release switches 55 and 56, respectively, located on a control panel accessible for operation by the pilot. Tracing the circuit shown for cartridge 13, it will be noted that when the pilot's switch 55 is thrown over to the contact marked "Test," either the light marked "Out" or "Set" will illuminate. If the plunger 21 has not ejected the dissipator assembly, tension switch 48 will be open and fusible link 33 will be closed, causing current to flow from battery through the "Set" light, brush 54, contact 52, stud 52a and fusible link 33 to ground and back to battery, indicating that the cartridge is ready for operation. If he now throws switch 55 to the "release" position, current will flow from battery through brush 54 without illuminating either of the indicating lights, through contact 52, stud 52a and fusible link 33, to ground and back to battery. This circuit does not contain an indicating light, and the wire link 33 is so designed that it will fuse when the voltage drop, due to an indicating light, is not in the circuit, as in this condition more current will flow through said link.

After wind-cone 42 has completely withdrawn resistor 36 and wire 37 from the cartridge, which condition is shown for cartridge 14 of Fig. 1, the electric circuit for this condition is shown in the bottom part of Fig. 3. Tension switch 48 is now closed and fusible link 33 is now broken and, upon the pilot's throwing switch 56 to the "Test" position, an electric circuit will be completed from battery through "Out" light, illuminating the same, through brush 53, sleeve contact 51, stud 51a, contact 50, switch 48 and plug 16 to ground, thence back to battery.

It will be readily understood that the pilot can be continuously advised of the position and condition of the dissipator assemblies and in the event that the proper release of one cartridge is not effected, for example, in the event that the wind-cone or resistor 36 and wire 37 might be whipped off, the pilot can then release a second cartridge 14, and he is thereby afforded an additional factor of safety. It is for this reason that Fig. 1 shows an assembly of two cartridges, and the control panel shown in Fig. 3 has duplicate switches 55 and 56 and duplicate indicating lights and circuits, to permit the pilot to operate the particular cartridge which is to be utilized for static dissipation.

It will also be understood that the cartridge assemblies such as 13 and 14 are readily removable and replaceable so that renewed units can be quickly inserted in place of units which have been released for use during flight. The construction of the plug member 16 and cooperating locking members 15 is such as to provide a secure mechanical as well as electrical connection of the cartridge members in place, while still permitting ready engagement and disengagement of the same by proper manipulation thereof. Units which are removed after use are readily and economically renewable by simply replacing and resetting the parts subject to rupture or possible damage, including the wire links 33 and diaphragms 47, and also the wind-cones 42, cords 40 and 41, wires 37, and resistors 36 in case the latter parts are damaged either during flight or upon landing.

Since it is not intended to restrict the invention to the particular embodiment shown, various changes can be made without exceeding the scope of the invention. For example, any other suitable resistance material, or form of resistance, might be substituted for resistor 36, and any desired modifications within the skill of the art are to be understood as comprehended by the appended claims.

What is claimed is:

1. Apparatus for the dissipation of static charges, comprising a receptacle mounted upon a vehicle, a cartridge removably fitted within said receptacle and containing an ejector mechanism, quick-detachable means for securing said cartridge in said receptacle and electrically connecting said cartridge to said vehicle, an electric conductor having one end electrically connected to said vehicle through said cartridge and its other end positioned so as to be carried by said ejector mechanism, trigger means within said cartridge for normally retaining said ejector mechanism in retracted condition, and means operable within said vehicle for effecting operation of said trigger means in said cartridge to release said ejector mechanism and eject said electrical conductor from said cartridge.

2. In combination, means for discharging static from an aircraft comprising a receptacle mounted on said aircraft, a cartridge removably secured within said receptacle, an electrical conductor within said cartridge, means within said cartridge for ejecting said conductor therefrom, an electrical connection between said conductor and said aircraft, means operated from said aircraft to initiate the ejection of said conductor, and means within said aircraft and operated by said conductor to indicate the ejection of said conductor from said receptacle.

3. Mechanism for controlling the discharge of static from an aircraft which comprises a receptacle mounted on said aircraft, a cartridge carried by said receptacle, an electrical conductor within said cartridge and having one end electrically connected thereto, an ejector mechanism within said cartridge, means upon said mechanism for carrying the other end of said conductor, a fixed frame mounted axially of said ejector mechanism and extending longitudinally thereof, said conductor being wound about said frame, trigger means for normally holding said ejector mechanism in retracted position, means within said aircraft for actuating said trigger means and thereby causing said conductor to be ejected, and means operated by said conductor when in ejected condition for indicating said condition within said aircraft.

4. In combination with a vehicle subject to static charges, means for controlling the dissipation of such charges comprising an electrical conductor having one end electrically connected to said vehicle, its other end extending rearwardly at some length from said vehicle, an electrical resistor disposed between the ends of said conductor, means for containing said conductor normally coiled within a trailing portion of said vehicle, means within said trailing portion for ejecting said conductor, means for normally holding said ejecting means in retracted position, and means operable from within said vehicle to release said ejecting means, whereby said conductor will extend rearwardly of said vehicle as above specified.

5. An apparatus for the dissipation of static charges, comprising a cartridge adapted to be mounted within the trailing portion of an aircraft, a spring-biased plunger within said cartridge, a latch for normally maintaining said plunger retracted against the action of its spring, a fusible link for maintaining said latch member in plunger restraining position, an electrical conductor coiled within said cartridge and having one end connected to said aircraft, a wind-cone carried by said plunger, a lead connecting said wind-cone to the free end of said electrical conductor, and electrical switch means for fusing said fusible link, whereby said latch releases said spring-biased plunger to project said wind-cone into the slip-stream of the aircraft and start the uncoiling of said electrical conductor.

6. Apparatus for discharging static from an aircraft in flight, comprising a hollow tubular member adapted to be carried in a trailing portion of an aircraft, a plug attached to the inner end of said member for engaging with a locking means on an aircraft, an electrical conductor coiled within said member and having one end electrically connected to said plug, a wind-cone within said member connected to the other end of said conductor, a plunger and spring means for ejecting said plunger from said member, latch means for maintaining said plunger retracted against the action of said spring means, means carried by said wind-cone for releasably connecting said wind-cone to said plunger, means for tripping said latch means, whereby, upon ejection of said plunger by the action of said spring means, said wind-cone may be projected into the airstream and effect the uncoiling of said conductor, and means operable upon the uncoiling of said conductor for indicating the operation of said apparatus within said aircraft.

7. Apparatus for discharging static from an aircraft in flight, comprising a hollow tubular member adapted to be carried in a trailing portion of an aircraft, a plug attached to the inner end of said member for engaging with a locking means on an aircraft, an electrical conductor coiled within said member and having one end electrically connected to said plug, a wind-cone within said member connected to the other end of said conductor, a plunger and spring means for ejecting said plunger from said member, latch means for maintaining said plunger retracted against the action of said spring means, means carried by said wind-cone for releasably connecting said wind-cone to said plunger, means including an electrically fusible link for tripping said latch means, whereby, upon ejection of said plunger by the action of said spring means, said wind-cone may be projected into the airstream and effect the uncoiling of said conductor, an electric switch operable upon the uncoiling of said conductor, electric signal circuits including said fusible link and said switch, and signal means in said circuits for indicating the retracted and extended conditions of said conductor.

8. Apparatus for the discharge of static from an aircraft in flight, comprising a receptacle in a trailing portion of said aircraft, a hollow tubular cartridge releasably connected within said receptacle, static discharge means releasably held within said cartridge, electric circuit-changing means within said cartridge actuated by the operation of said static discharge means, and indicating means in circuit therewith, including means within said aircraft for indicating a change of circuit.

9. An apparatus for the dissipation of static charges comprising a cartridge adapted to be secured to a trailing portion of an aircraft, plunger means in said cartridge, means for biasing said plunger for movement from a retracted position to a projected position, latch means for normally maintaining said plunger means in said retracted position, a wind-cone carried by the projectable end of said plunger means, conductor means coiled within said cartridge having one end connected to said aircraft and the other end connected to said wind-cone, and means for releasing said latch means to free said plunger for movement to said projected position to project said wind-cone into the slip stream of the aircraft and start the uncoiling of said conductor means.

10. An apparatus for the dissipation of static charges comprising a cartridge, means for releasably securing said cartridge to a trailing portion of an aircraft to connect said cartridge thereto electrically and mechanically, said means providing for ready removal and replacement of said cartridge, plnger means in said cartridge, means for biasing said plunger for movement from a retracted position to a projected position, electro-responsive latch means in said cartridge for normally maintaining said plunger means in said retracted position, a wind-cone positioned in said cartridge for movement therefrom by said plunger means, conductor means coiled within said cartridge having one end electrically and mechanically connected to said cartridge and the other end mechanically connected to said wind-cone, and means within said aircraft for effecting operation of said electro-responsive latch means to release said plunger means and project said wind-cone into the slip stream of the aircraft, said plnger means thereby starting the uncoiling of said conductor means.

11. Apparatus for discharging static from an aircraft in flight comprising a hollow tubular member adapted to be carried by a trailing portion of an aircraft, interengaging locking means on said trailing portion and said member respectively, said locking means on said member including a plug, an electric conductor coiled within said member and having one end electrically connected to said plug, a plunger within said member, spring means for ejecting said plunger from said member, latch means for maintaining said plunger retracted against the action of said spring means, a wind-cone within said member connected to the other end of said conductor and releasably associated with said plunger for movement thereby, and means for tripping said latch means to cause ejection of said plunger and movement of said wind-cone into the slip

stream of said aircraft to effect uncoiling of said conductor.

12. Apparatus for discharging static from an aircraft in flight comprising a hollow tubular member adapted to be carried by a trailing portion of an aircraft, interengaging locking means on said trailing portion and said member respectively, said locking means on said member including a plug, an electric conductor coiled within said member and having one end electrically connected to said plug, a plunger within said member, spring means for ejecting said plunger from said member, latch means for maintaining said plnuger retracted against the action of said spring means, a wind-cone within said member connected to the other end of said conductor and releasably associated with said plunger for movement thereby, and means including an electrically fusible element for tripping said latch means, whereby, upon ejection of said plunger by said spring means, said wind-cone is projected into the air stream to effect uncoiling of said conductor.

HERBERT M. HUCKE.