S. EBERLY.

CAN HANDLING MECHANISM.

APPLICATION FILED OCT. 21, 1919.

1,373,605.

Patented Apr. 5, 1921.

3 SHEETS—SHEET 1.

Fig. 1

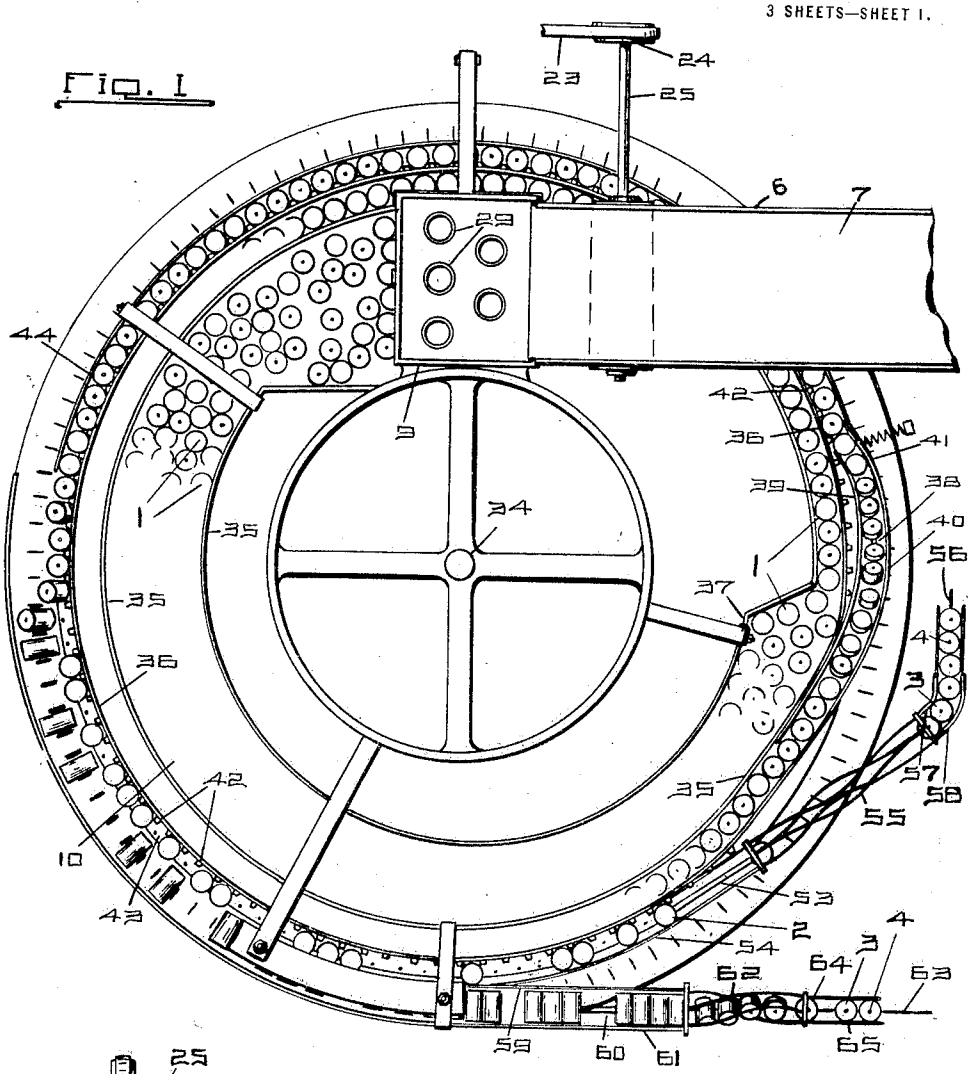

Fig. 2

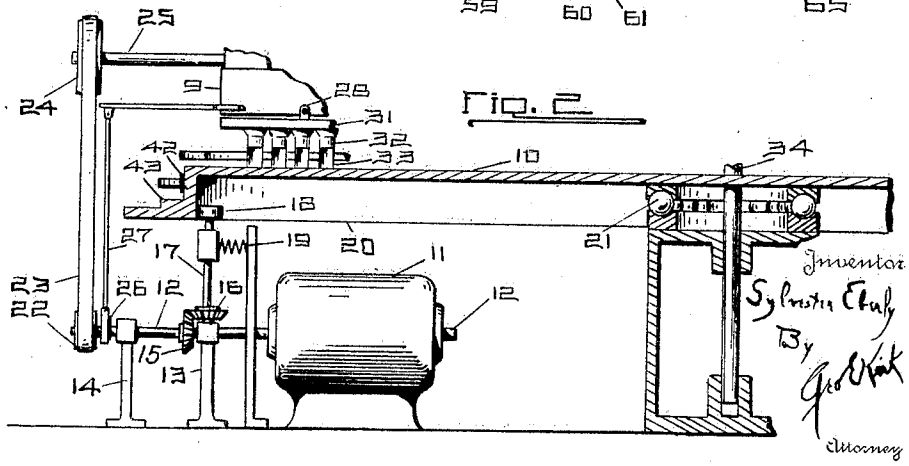

Inventor

Sylvester Eberly

By

Geo. Kirk

Attorney

S. EBERLY.

CAN HANDLING MECHANISM.

APPLICATION FILED OCT. 21, 1919.

1,373,605.

Patented Apr. 5, 1921.

3 SHEETS—SHEET 2.

Fig. 3

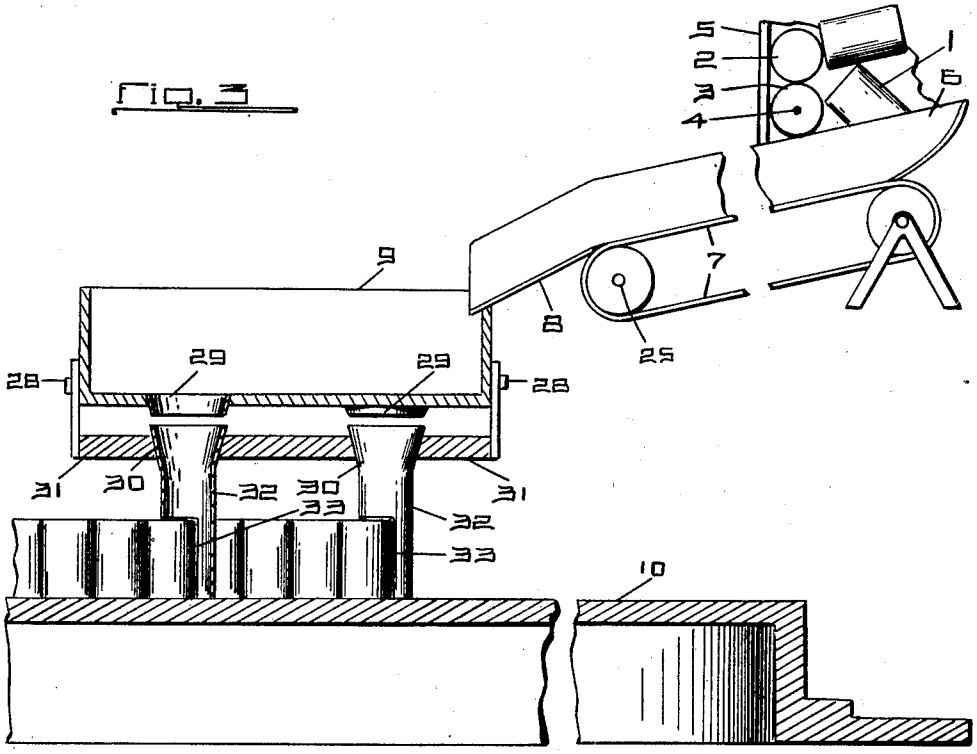

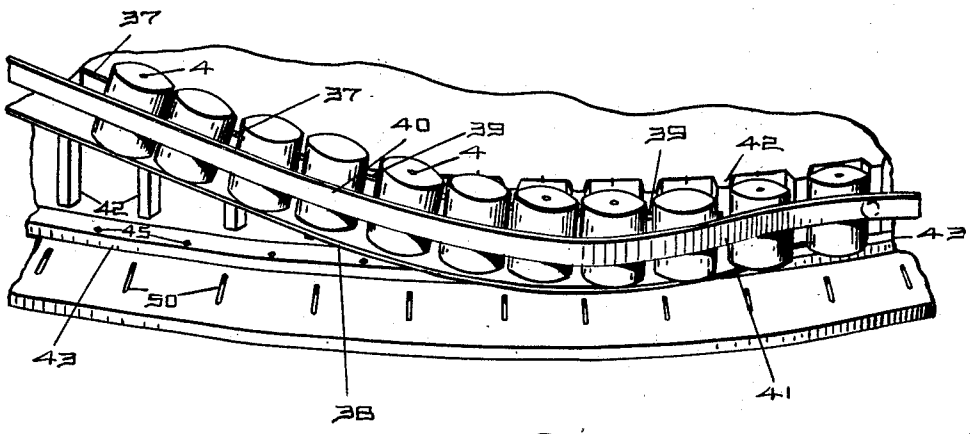

Fig. 4

Sylvesta Eberly Inventor

By Geo. Kirk

Attorney

S. EBERLY.

CAN HANDLING MECHANISM.

APPLICATION FILED OCT. 21, 1919.

1,373,605.

Patented Apr. 5, 1921.

3 SHEETS—SHEET 3.

Fig. 5

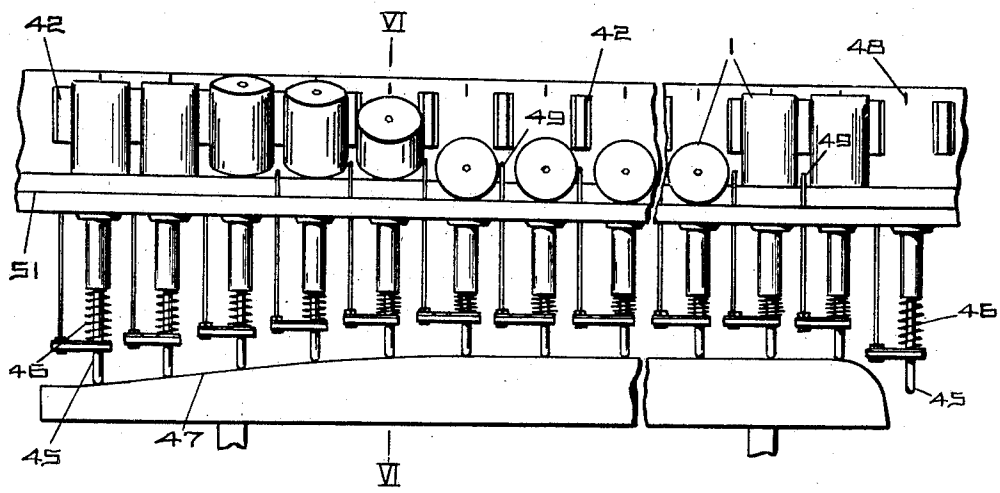

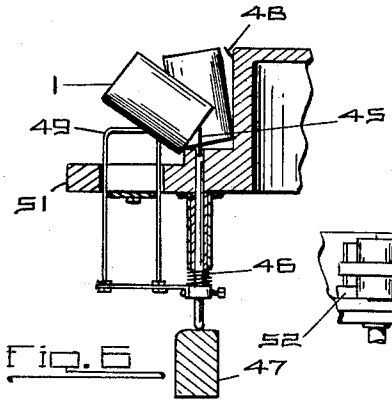

Fig. 6

Fig. 7

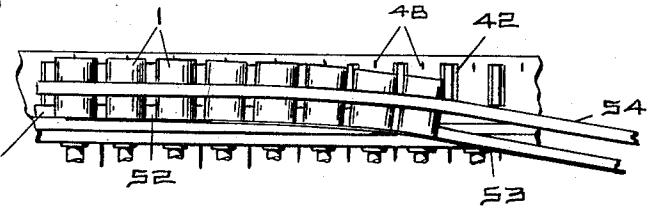

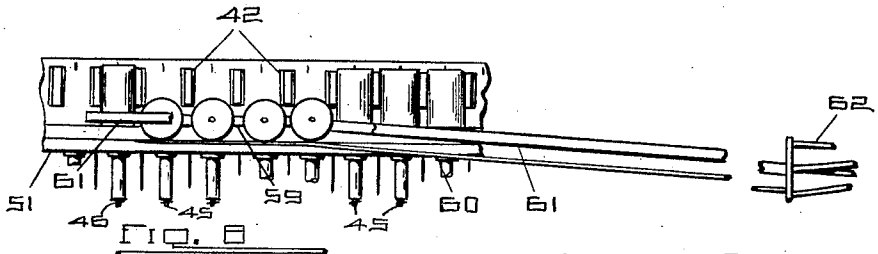

Fig. 8

Sylvester Eberly Inventor

By Geo E Kirk

Attorney

UNITED STATES PATENT OFFICE.

SYLVESTER EBERLY, OF TOLEDO, OHIO, ASSIGNOR TO DAVID A. YODER, OF TOLEDO, OHIO.

CAN-HANDLING MECHANISM.

1,373,605. Specification of Letters Patent. Patented Apr. 5, 1921.

Application filed October 21, 1919. Serial No. 332,269.

To all whom it may concern:

Be it known that I, SYLVESTER EBERLY, a citizen of the United States of America, residing at Toledo, Lucas county, Ohio, have invented new and useful Can-Handling Mechanisms, of which the following is a specification.

This invention relates to mechanism for arranging similar or identical articles.

This invention has utility when incorporated in mechanism for grouping cans having one filling end in a common classification as to such filling end, as for condensed milk plants.

Referring to the drawings:

Figure 1 is a fragmentary plan view of an embodiment of the invention in a machine for handling the "talls" or long cylindrical cans or containers such as are used for 1 lb. cans of condensed milk and approximating 3 inches in diameter and 4⅜ inches high, with a ⅛ inch hexagonal hole in one end only thereof as a filling opening central of such end;

Fig. 2 is a detail view of some of the driving connections for the machine of Fig. 1;

Fig. 3 is a partial view of the supply conveyer and up-ending device for the machine;

Fig. 4 is a view of the conducting means effecting spaced seating of the cans of the up-ended supply;

Fig. 5 is a view of the sorter as coacting with the seated cans;

Fig. 6 is a section on the line VI—VI, Fig. 5;

Fig. 7 is a view of the take-off coacting means for the cans left in the seats by the sorter; and

Fig. 8 is a view of the take-off chute and up-ending way for sorter-selected cans.

Cylindrical cans 1 having imperforate bottoms 2, tops 3 with central hexagonal filling openings 4 may be in storage bin or box car 5, in ricks or tumbled about. For the rapid removal of such from such bulk groupings, a workman may have a fork to insert between or under the cans as resting together, and by lifting such fork, a considerable number of the light empty cans 1 may be removed at a time for deposit in hopper 6 above belt conveyer 7 to be moved by the conveyer 7 to slide down supply chute 8 into receiver 9. About a bushel or say fifty of these cans may be forked at one time.

This receiver 9 is mounted over a rotary table 10 (Figs. 1, 2, 3). Beneath this table is conveniently located motor 11 having shaft 12 extending past bearings 13, 14. Bevel pinion 15 on the shaft 12 is in mesh with bevel gear 16 on upwardly extending shaft 17 terminating in friction wheel 18 normally held by helical spring 19 against depending skirt or rim 20 of the main carrier wheel or table 10. This table 10 has a central anti-friction bearing 21.

This shaft 12 has a small pulley 22 thereon connected by belt 23 to pulley 24 on shaft 25 operating the conveyer belt 7.

Eccentric 26 on the slow speed motor shaft 12 may, through link 27, rock or shake the receiver 9 on its bearing 28, for continually shifting the cans 1 sliding by chute 8 into the receiver 9. These cans 1 as thus rolled and tumbled about into the receiver 9 are readily up-ended by sliding downward into throats 29 in the bottom of the receiver 9. Such outlet means or throats 29 are concentrically above guides having upper portions 30 tapered outside the taper of the throats 29 to receive cans 1 therefrom. A rigid frame 31 carries the group of guides 30, which have lower semi-cylindrical portions 32 for steadying the cans 1 as sliding downward thereinto to be sustained on the table 10. The direction of rotation of the table 10 is such as to withdraw from the guides 32 through the open sides 33 thereof, the cans 1 as up-ended therein. The arrangement of the throats 29 is such that in the table rotation, the up-ended cans as drawn from the guides 32 may clear each other. The extent of the guides 32, 30, is such that as long as a can on the table 10 holds a can thereover in the tapered portion 30, shaking of the receiver 9 may not jam or wedge other cans in the throat 29.

As the table 10 moves continuously in carrying up-ended cans away from the up-ending shaker device, such cans are directed to a single file traveling series. Central shaft 34 carries a stationary directing frame 35 for urging the cans in a single row adjacent outer stationary frame 36, as the table 10 rotates.

After the directing frame 35 with its yieldable section 37 has effected the single row grouping of the cans 1, up-ended but unclassified as to the filling openings 4, conducting means comprising chute 38 with

inner directing side frame 39 as a continuation of the frame 35, has outer side 40 as a continuation of the frame 36. This side 40 has yieldable section 41, for directing the up-ended cans as actuated down the chute 38 by the cans on the table 10, into spaced seats embodying partitions 42 above an annular ledge 43 concentric with the table 10 and as a drop rim thereof.

The cans 1 are thus arranged in definitely spaced relation in the annular series of seats about the table 10 as a way surrounding and somewhat below the table top. A stationary holding frame 44 as a continuation of the side guide frame 40, retains the cans 1 in the seats, which are so shallow that side portions of the cans project radially out of these seats.

Concentric with the can when in full seated position, each seat has therebelow a plunger or pin 45 (Figs. 5, 6,), normally held down by a helical spring 46. As the table 10 rotates, the lower ends of these pins 45 ride upward on a stationary cam 47. This cam 47 is located beyond the end of the frame 44. If the can 1 over the pin 45 has its end 3 down, the pin 45 merely moves upward into the hole 4 and does not disturb such can. However, if the can 1 has its bottom end 2 down, there being no opening therein, the pin 45, in rising, lifts such can 1. As the can is lifted, inclined headless pin 48, just below the top of the table 10, directs the upper end of the lifted can 1 outward, so that such can is thrown out of the seat onto its side. With the upward movement of the pin 45, spacing arm 49 rises through opening 50 in ledge 51 as the third or outermost of the annular series of ways carried by the table 10. All of these cans 1 ejected from the seats 42, 43, had their bottom or imperforate ends 2 down. Thus the configuration of the cans 1 as contacted by the pin 45 of the throw-out device has brought about a selection and classification of certain of the cans 1.

There is likewise, left in the seats 42, 43, definitely classified cans 1—all of those which have the filling opening 4, down. As the table 10 continues its rotation, stationary controlling means embodying a finger 52 below the partitions 42, slides in back of each of the cans 1 left in the seats on the ledge 43, to urge such cans 1, off upon chute 53 and against outer directing frame 54. These cans with the filling opening 4 downward, may now pass through cage 55 for bringing the filling openings 4 up, and be thence conducted on conveyer cable 56 between stationary guide frames 57, 58, to a can filling machine. In practice this conveyer would receive approximately 50% of the cans thrown upon the conveyer belt 7. Thus this machine or can handling mechanism may be an automatic adaptation for supplying a plurality of can filling machines.

The cans which have been rolled or rocked upon the ledge 51, may have their closed or inner ends engaged by a stationary finger 59, to move these cans 1 radially outward, as the table 10 rotates, for urging along chute 60 as outwardly limited by a guide frame member 61. The cam 47 extends to just short of the finger 59 so that the spacing arms 49 are effective. This means that there is a positive crowding of these laid-sidewise cans from the ledge 51 into the chute 60. To bring these cans 1 into position to have their filling openings 4 up, a cage 62 of 90° throw, instead of 180° as is cage 55, swirls these cans for delivery to conveyer cable 63 between stationary guide members 64, 65, in travel to a can filling machine.

There is accordingly accomplished by the device of this disclosure, an arranged delivery of cans. With a six foot diameter table 10 rotating six times per minute, four hundred one-pound cans per minute are automatically supplied and classified directly to a filling machine by a single man in the car being unloaded, or in the storage room. The cans are gently handled speedily. No harm is thus done to the containers. The device does not occupy as much space as would be required by manual sorting, saves such labor, and requires but little power to operate. The conveyer 7, in car unloading, may be of an adjustable character for ready setting or extension to suit conditions.

What is claimed and it is desired to secure by Letters Patent is:

1. Can handling mechanism embodying a conveyer, an up-ending device to which the conveyer delivers, and a sorter for cans of different end structures including mechanism for moving cans of one end structure-up away from cans having a different end structure-up.

2. Can handling mechanism embodying a supply way and a sorter, including mechanism for moving cans of one end identification structure away from cans having a different identification structure as to such end.

3. Can handling mechanism embodying a supply chute, a receiver, and means for shaking the receiver to up-end the cans.

4. Can handling mechanism comprising a supply chute, a receiver with tapered throats therefrom, and means for shaking the receiver to direct cans through the throats for up-ending the cans.

5. Can handling mechanism embodying a supply chute, a receiver with tapered throats therefrom, a shaker for the receiver, and guides for receiving cans up-ended by the shaking to pass through the throats.

6. Can handling mechanism embodying a supply chute, a receiver with discharge throat means therefrom, a shaker for rock-

ing the receiver to spill cans therefrom through the throat means, and open side guide means for receiving up-ended cans from the throat means.

7. Can handling mechanism comprising up-ending means for cans including a tubular way, open side guide means for receiving up-ended cans from the way, and can supporting means movable under the guide means to remove up-ended cans from the guide means through the open side thereof.

8. A supply chute, stationary bottomless open side guides providing can up-ending means from the chute, and directing means for bringing the up-ended cans into a row.

9. Can handling mechanism comprising movable platform to progress a series of up-ended cans, guide means for moving the cans on said platform into a row, a series of seats movable with the platform, and conducting means for positioning cans on the platform from the row into said seats.

10. Can handling mechanism comprising means to progress a series of seats, conducting means for positioning cans in the seats, and a sorter for selecting and removing cans from the seats.

11. Can handling mechanism comprising an annular series of seats, conducting means for positioning the cans in the seats, a throw-out device for selecting cans in the seats, and means for operating the throw-out for removing selected cans from the seats.

12. Can handling mechanism comprising an annular series of seats, driving means therefor, conducting means for positioning cans in the seats, a throw-out device, and stationary cam means for operating the throw-out device independently of the configuration of the can in the seat, whereby a configuration sorting of the cans may be effected by the device ejecting a predetermined configured can from the seat.

13. Can handling mechanism comprising an annular series of seats, driving means therefor, conducting means for positioning cans in the seats, a throw-out device for each seat, a stationary cam for operating the devices as the seats move therepast for ejecting from the seats cans of predetermined throw-out device contacting configuration and leaving cans of different device contacting configuration, and controlling means for removing un-ejected cans from the seats which have passed the cam.

14. Can handling mechanism comprising concentric ways, an intermediate one of which ways comprises an endless series of can seats, a throw-out device for selecting determined device contacting configured can, operating means for the device for ejecting a selected can from the seat, to one of said ways, and can coacting means for removing cans thrown to the way by the device.

15. Can handling mechanism comprising an inner up-end supply way, an endless annular series of seats about said way, conducting means for positioning cans from the way to the seats, a sorter leaving certain cans on the seats, a way surrounding the annular series of seats to receive cans from the seats as rocked down thereon by the sorter, and an up-ending chute for righting the rocked down cans.

16. Mechanism for handling end-filling hole cans including means for classifying such cans embodying a support for the cans, and a can hole contacting device movable as to the support for shifting cans off the support.

In witness whereof I affix my signature.

SYLVESTER EBERLY.