Dec. 1, 1953 I. MOLNAR 2,661,465

ARRIVAL AND DEPARTURE TRANSPORTATION INDICATOR SYSTEM

Filed Sept. 13, 1952 9 Sheets-Sheet 1

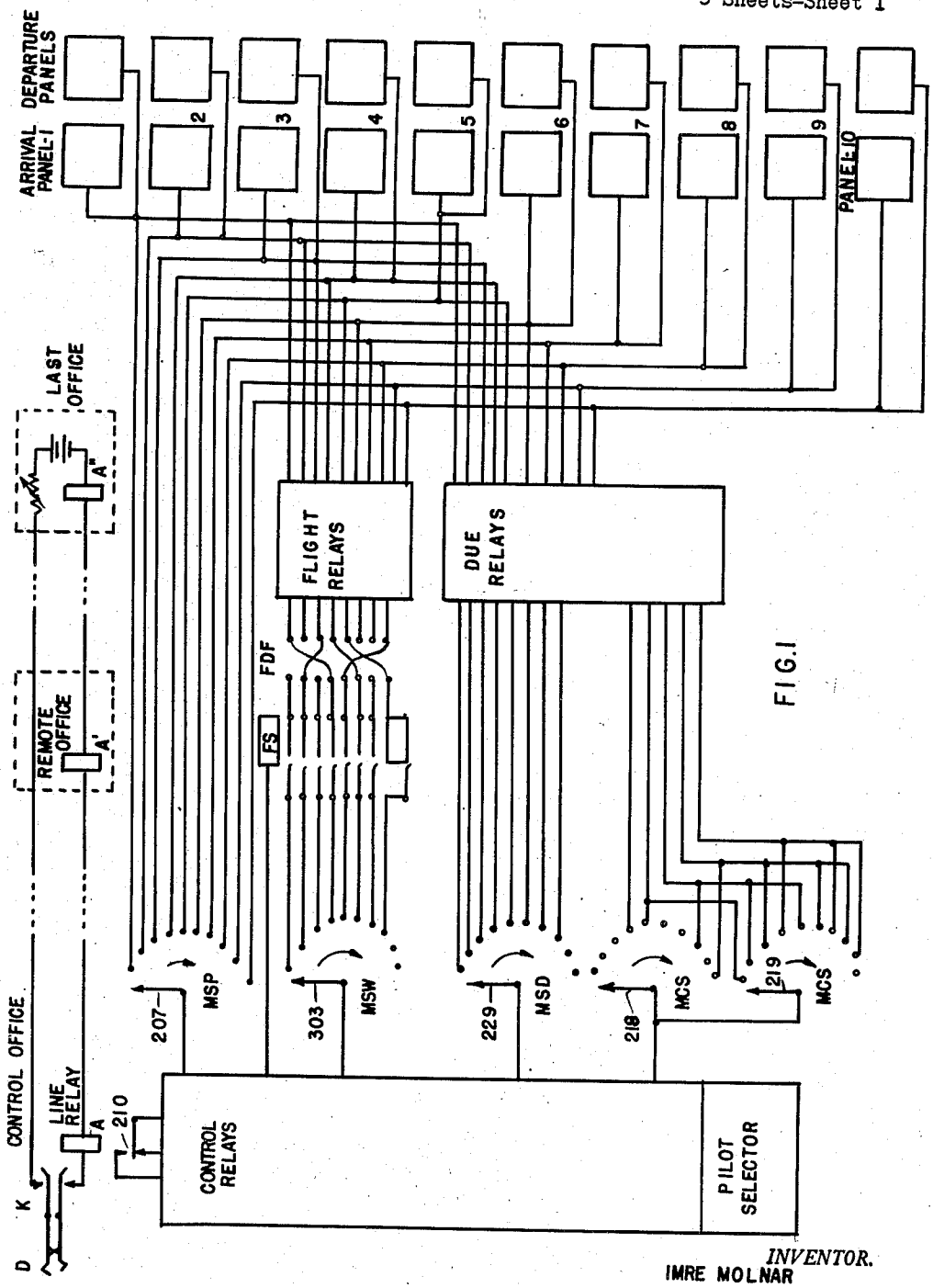

FIG. 1

INVENTOR.
IMRE MOLNAR

BY Wm. Walter Owen

ATTY.

Dec. 1, 1953 I. MOLNAR 2,661,465

ARRIVAL AND DEPARTURE TRANSPORTATION INDICATOR SYSTEM

Filed Sept. 13, 1952 9 Sheets-Sheet 2

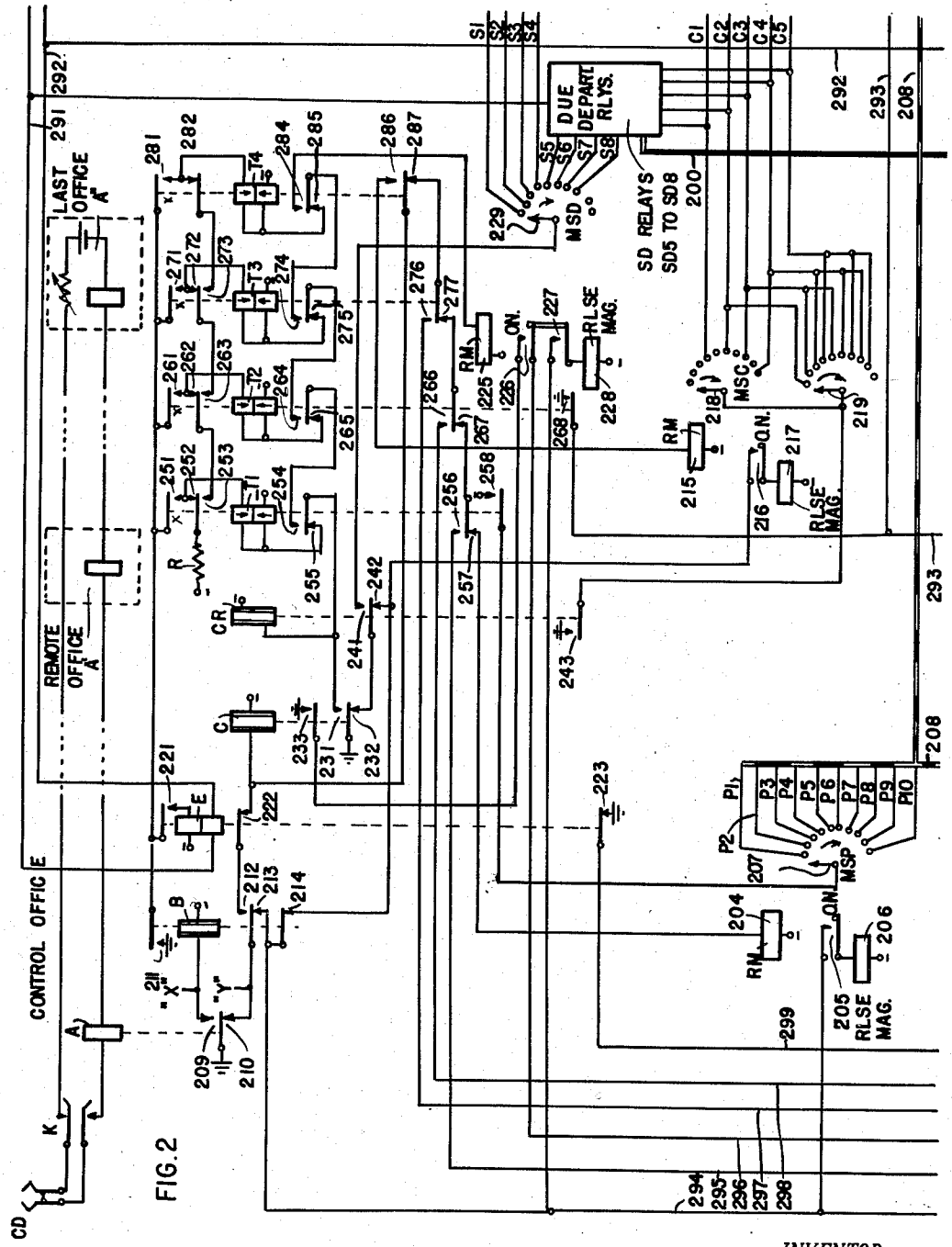

FIG. 2

INVENTOR.
IMRE MOLNAR

BY Mills Watts Owen

ATTY.

Dec. 1, 1953 I. MOLNAR 2,661,465

ARRIVAL AND DEPARTURE TRANSPORTATION INDICATOR SYSTEM

Filed Sept. 13, 1952 9 Sheets-Sheet 3

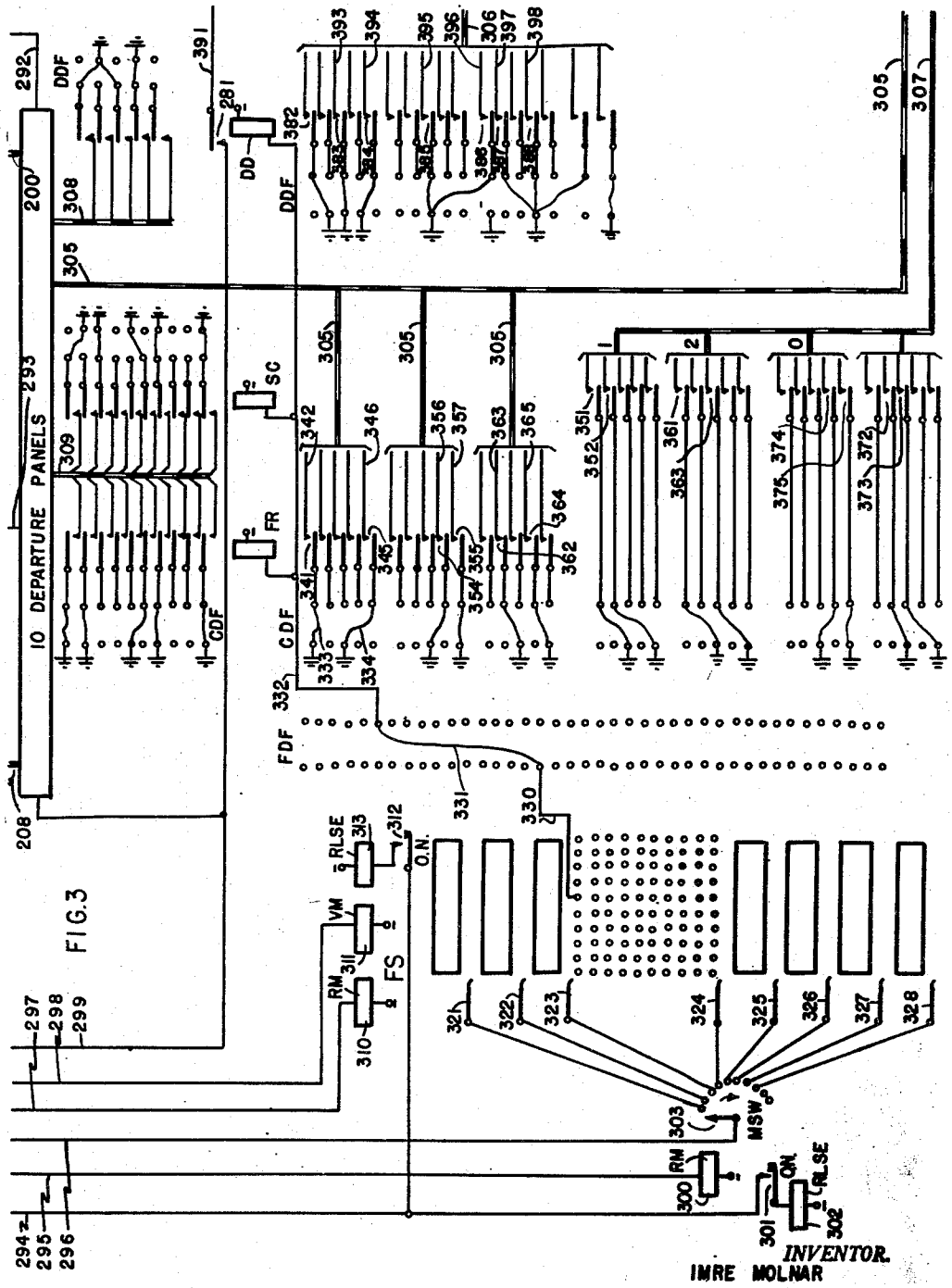

FIG. 3

INVENTOR.
IMRE MOLNAR
BY Mills Watts Owen

ATTY

Dec. 1, 1953 I. MOLNAR 2,661,465

ARRIVAL AND DEPARTURE TRANSPORTATION INDICATOR SYSTEM

Filed Sept. 13, 1952 9 Sheets-Sheet 4

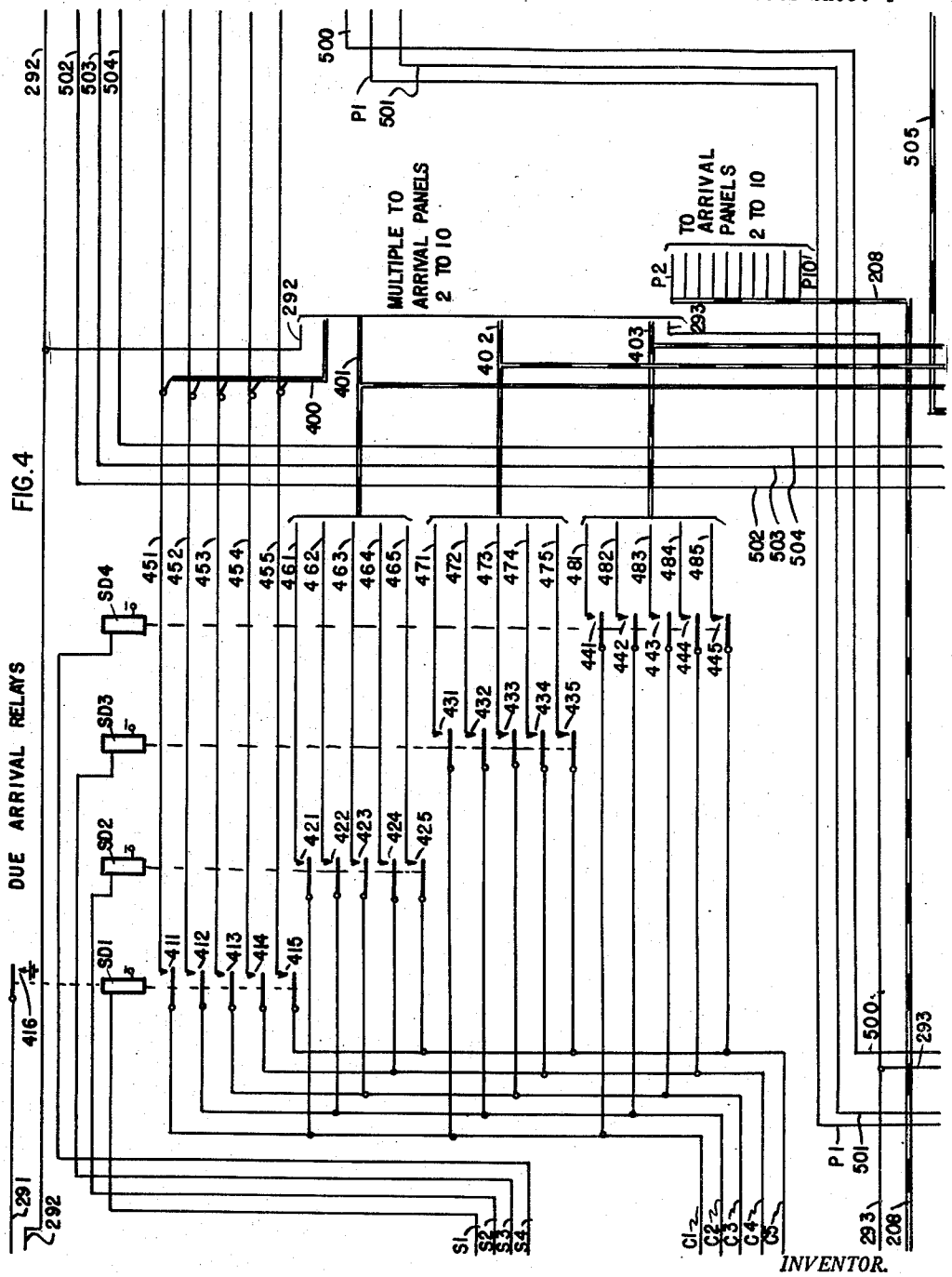

FIG. 4

INVENTOR.
IMRE MOLNAR

BY Wm Walter Owen

ATTY.

Dec. 1, 1953 I. MOLNAR 2,661,465

ARRIVAL AND DEPARTURE TRANSPORTATION INDICATOR SYSTEM

Filed Sept. 13, 1952 9 Sheets-Sheet 5

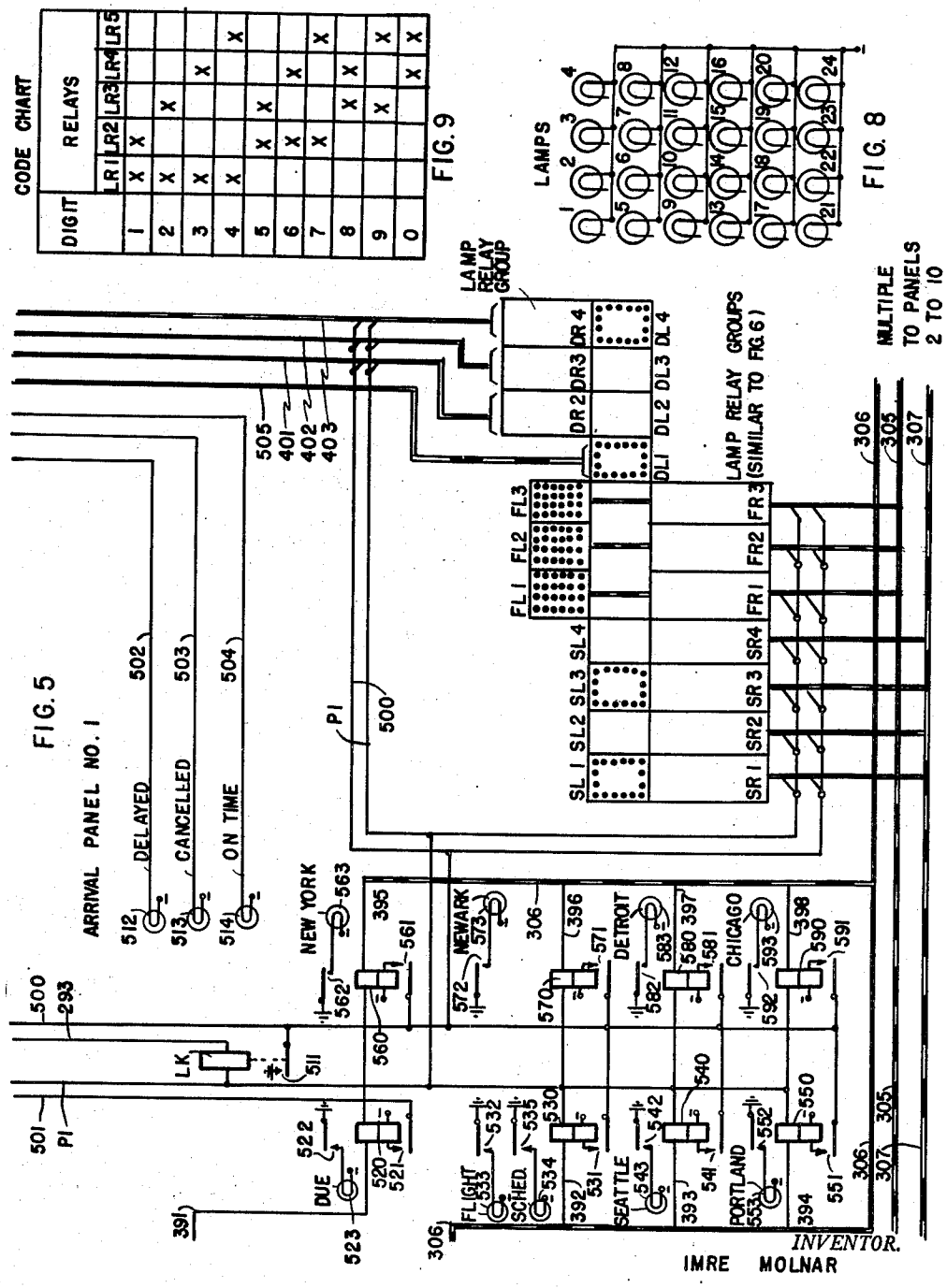

FIG. 5

INVENTOR.
IMRE MOLNAR

BY Wm. Walter Owen

ATTY

Dec. 1, 1953 I. MOLNAR 2,661,465

ARRIVAL AND DEPARTURE TRANSPORTATION INDICATOR SYSTEM

Filed Sept. 13, 1952

9 Sheets-Sheet 6

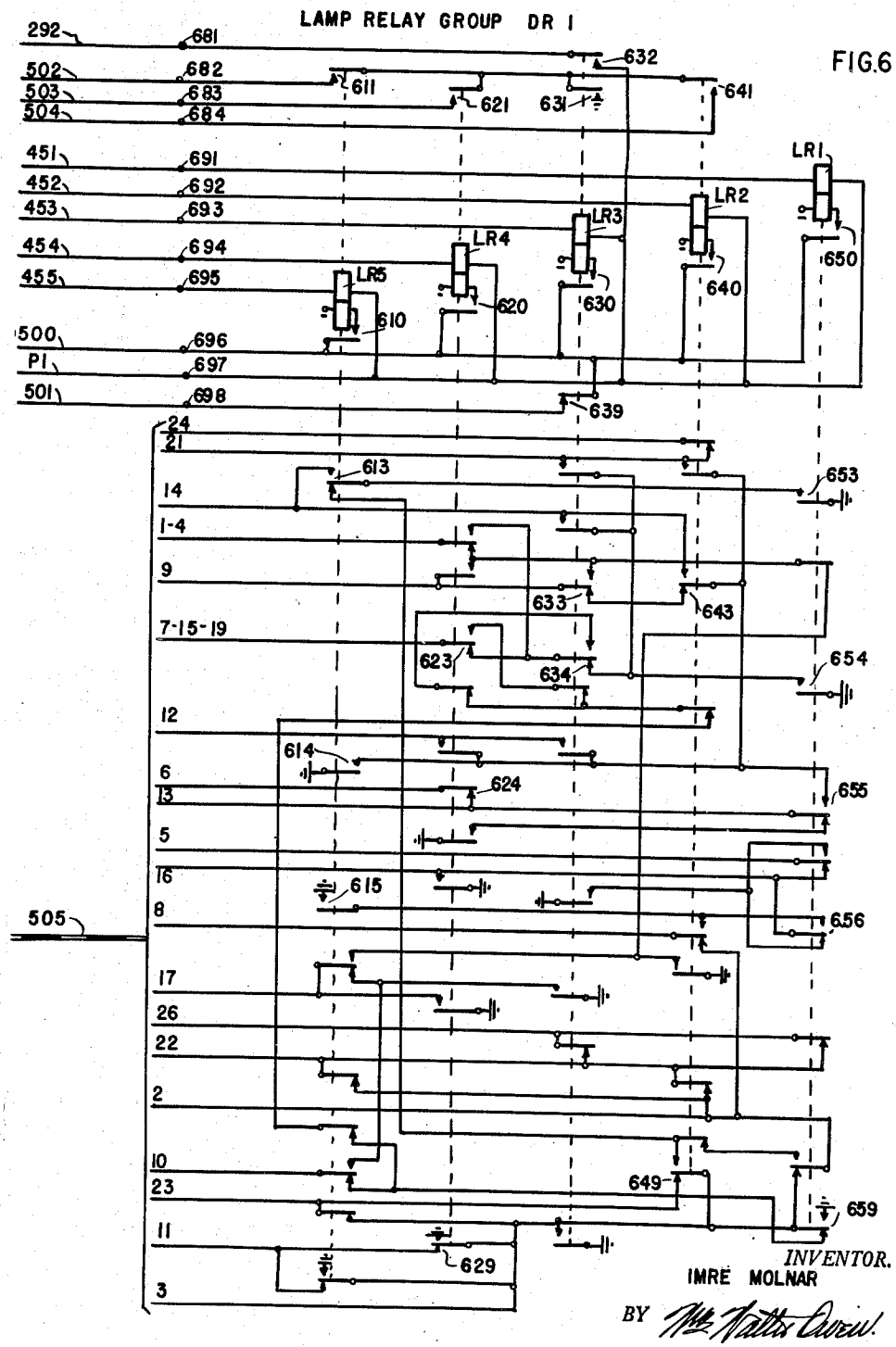

FIG.6

INVENTOR.
IMRE MOLNAR

BY [signature]

ATTY.

Dec. 1, 1953 I. MOLNAR 2,661,465

ARRIVAL AND DEPARTURE TRANSPORTATION INDICATOR SYSTEM

Filed Sept. 13, 1952 9 Sheets-Sheet 7

FIG. 7

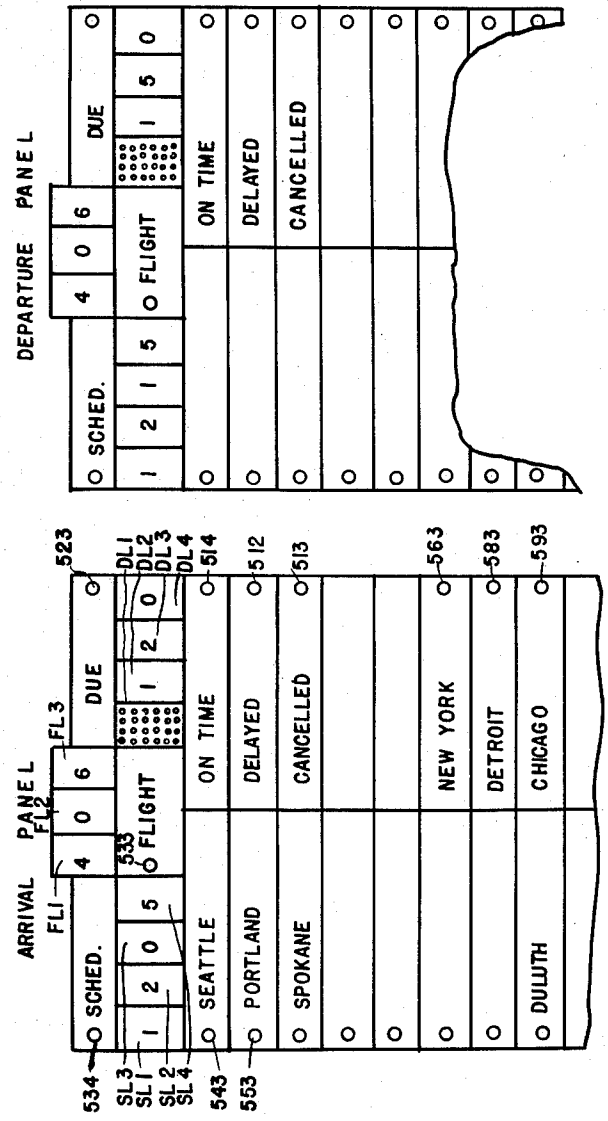

FIG. 13

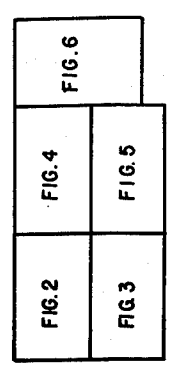

INVENTOR.
IMRE MOLNAR

BY Wm. Walter Owen

ATTY.

Dec. 1, 1953 I. MOLNAR 2,661,465

ARRIVAL AND DEPARTURE TRANSPORTATION INDICATOR SYSTEM

Filed Sept. 13, 1952 9 Sheets-Sheet 8

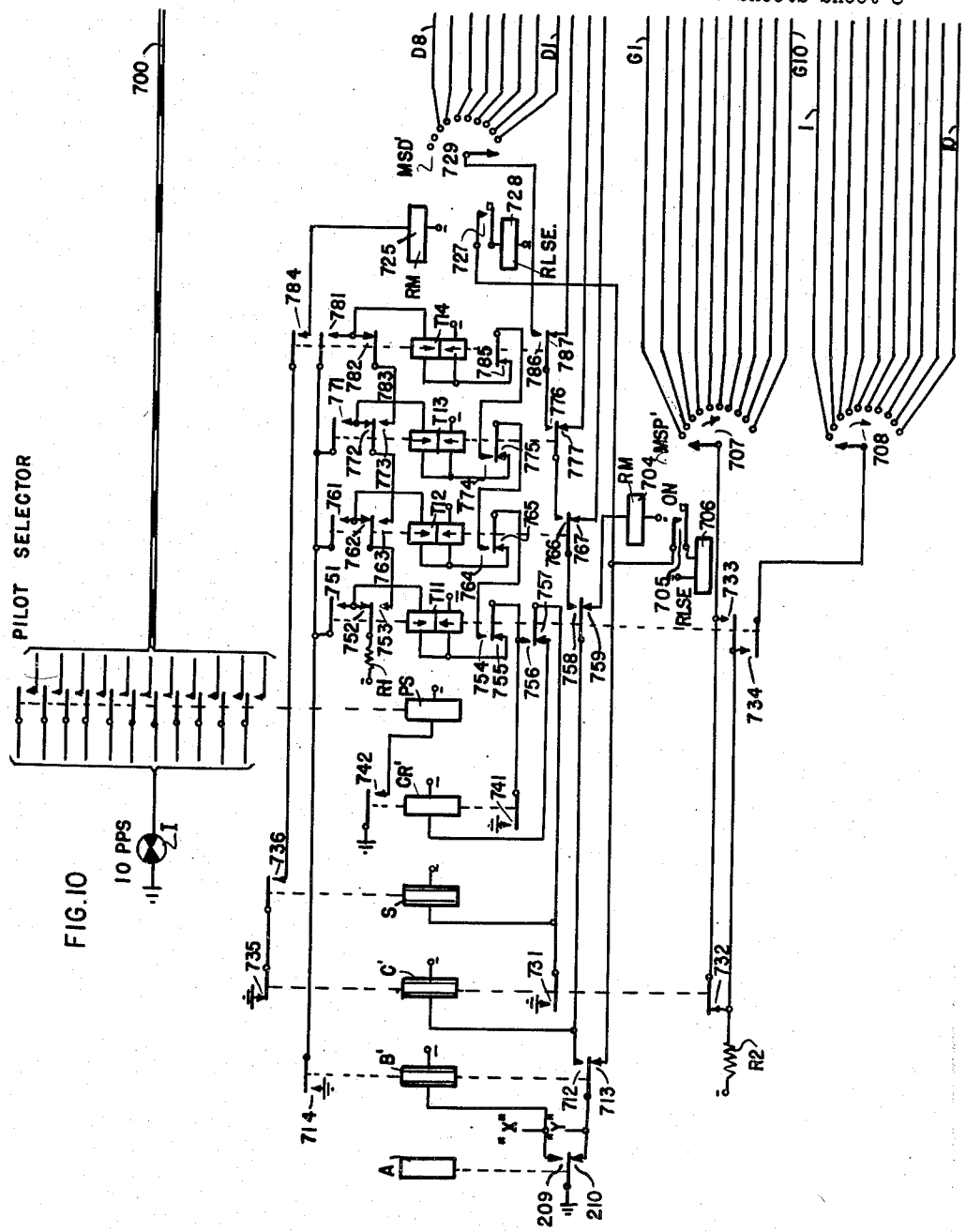

FIG. 10

INVENTOR.
IMRE MOLNAR

BY Wm. Watts Owen

ATTY.

Dec. 1, 1953 I. MOLNAR 2,661,465

ARRIVAL AND DEPARTURE TRANSPORTATION INDICATOR SYSTEM

Filed Sept. 13, 1952 9 Sheets-Sheet 9

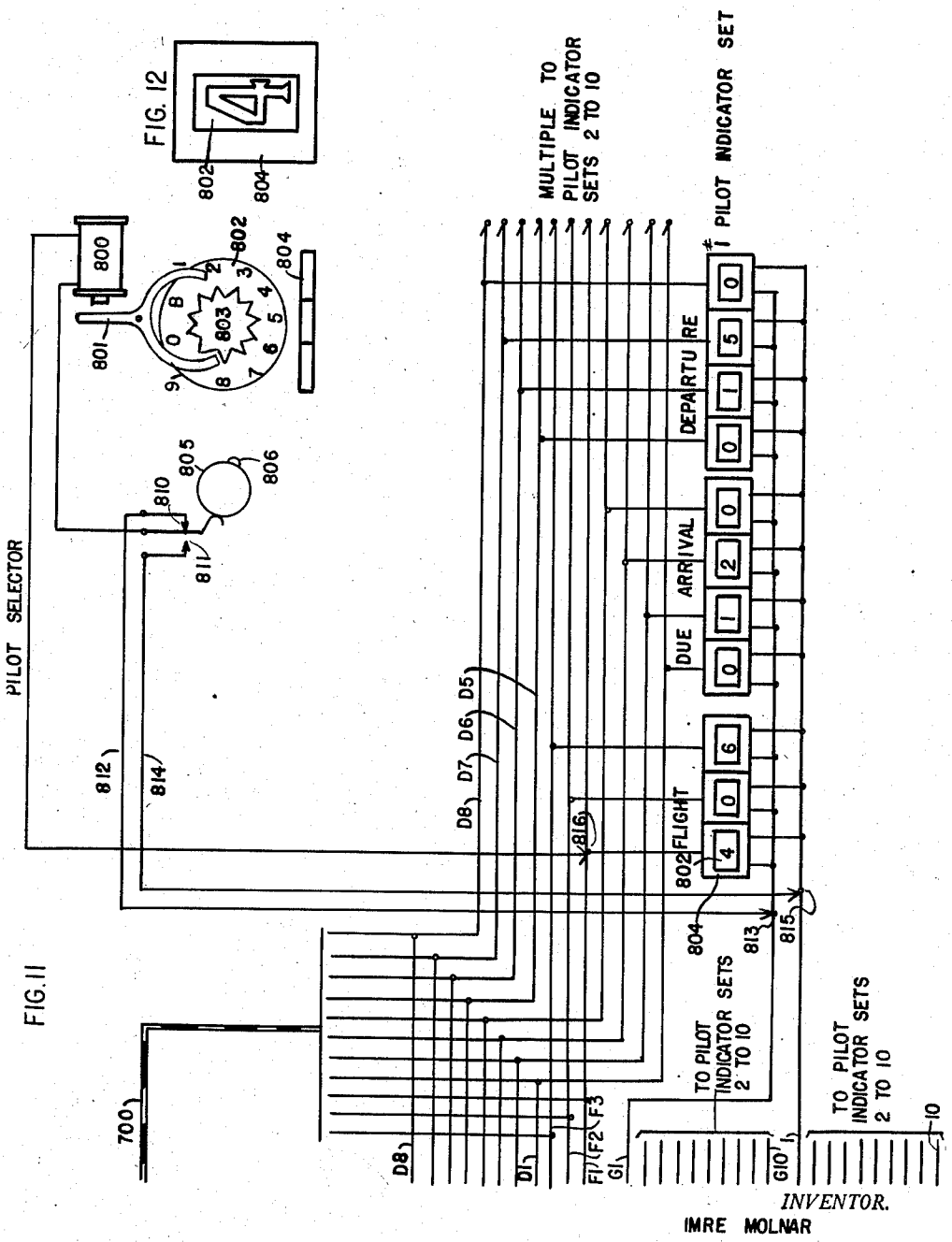

FIG. 11

INVENTOR.
IMRE MOLNAR

BY Wm. Walter Owen,

ATTY.

Patented Dec. 1, 1953

2,661,465

UNITED STATES PATENT OFFICE

2,661,465

ARRIVAL AND DEPARTURE TRANSPORTATION INDICATOR SYSTEM

Imre Molnar, Chicago, Ill., assignor to Automatic Electric Laboratories, Inc., Chicago, Ill., a corporation of Delaware

Application September 13, 1952, Serial No. 309,420

14 Claims. (Cl. 340—23)

1

The present invention relates in general to indicating systems but is concerned more particularly with an arrival and departure indicating system for any desired type of transportation system wherein display panels may be selectively operated to display travel information, such as the flight or route number, the scheduled arrival and departure times, the due arrival and departure times, the stopping points or cities enroute, and other special indications such as "on time," "delayed," or "cancelled."

The principal object of the invention is to provide an improved display system of the above mentioned character which may be easily and quickly changed from a control operator's position.

One of the features of the invention relates to the provision of fixed code marking means which is common to all display panels and the means whereby the fixed code marking means effectively operates only the display means of the selected display panels.

Another feature relates to the means for displaying special information, such as, "on time," "delayed," or "cancelled" instead of the usual due time of a scheduled flight.

A further feature relates to the means whereby the display apparatus for displaying the flight number and the scheduled time of arrival of this flight number is controlled by common fixed code marking means which is selected by dialling this flight number while the display apparatus for displaying the due time of arrival, or departure, is controlled by dialling digits corresponding to the due time.

Other features of the invention will become apparent from the following description of the apparatus and drawings.

General description

Referring now to the drawings, comprising Figs. 1–13, they show sufficient amount of equipment in an arrival and departure transportation indicator system to enable the invention to be understood.

Fig. 1 diagrammatically represents the system.

Figs. 2 to 6, inclusive represent, in part, the detail circuits for controlling the indicator display panels.

Fig. 7 shows an arrival and a departure display panel.

Fig. 8 shows the lamp arrangement for each numerical lamp group.

Fig. 9 shows a code chart indicating which of the relays of Fig. 6 are operated to display a particular digit.

2

Figs. 10 and 11 show a pilot selector for controlling mechanical indicators at the control operator's position.

Fig. 12 shows a front view of one of the mechanical indicators.

Fig. 13 illustrates the alinement of Figs. 2 to 6, inclusive.

A general description of the system will now be given. Each office, including the control office and the remote offices, includes both arrival and departure panels for displaying travel information to passengers. The invention is being described in connection with an airways transportation system and it will be understood that substantially the same arrangement could also be used on other transportation systems, such as on railroads or bus lines. For example, the arrival and departure panels display the flight or train number, the scheduled time of arrival and departure, the "due" arrival and departure times, the city or destination stopping points for this particular flight, and other information such as "on time," "delayed" or "cancelled," as indicated in Fig. 7. Any number of display panels could be provided in each office and ten arrival and ten departure panels are illustrated in Fig. 1.

The control office is connected to the remote offices over a two-conductor loop and each office contains sufficient equipment to display the desired information. The display equipment in each office is controlled over this loop from the control office to simultaneously display corresponding information.

Referring now to Fig. 1, the control operator, after receiving flight information over the usual channels, dials a first digit to operate panel selecting switch MSP to select the desired arrival and departure panels on which it is desired to display this particular flight information. This selection wipes out any previous display on these selected panels and conditions only these panels for operation. The control operator now dials a three digit flight number thereby operating switches MSW and FS to select and operate a particular set of gang flight relays. The various sets of flight relays are cross-connected through a flight distributing frame and control contacts for code marking conductors extending to the lamp relay groups which in turn control the lamps in the numerical "flight" and "schedule" lamp groups of the selected panels.

The control operator next dials a four digit number corresponding to the "due" arrival time of the dialled flight number. Switch MSD is operated one step for each of these four digits to successively operate "due" relays, such SD as

shown in Fig. 4. Code switch MCS is operated one step for each impulse of each digit to code mark conductors through the then operated "due" relay to control lamp relays associated with the "due" arrival lamp groups. Switch MCS is automatically released after each digit in order to successively code mark conductors through the successively operated "due" relays. The operated lamp relays control lamp groups in the "due" arrival numerical lamp panels to display the "due" arrival time on the selected arrival panel.

The control operator finally dials four more digits, corresponding to the "due" departure time, thereby operating switches MSD and MCS to operate lamp relays and lamp groups in the selected departure panel to cause the "due" departure time to be displayed on the selected departure panel.

Instead of displaying the "due" arrival time on the selected panel, the "on time," "delayed" or "cancelled" compartment lamps can be operated to give a corresponding indication.

In case the control operator is located at a position where the operator cannot observe the setting up of the new displays on the display panels, pilot display equipment consisting of mechanical indicators are provided at the operator's position for indicating the flight digits, the due arrival digits, and the due departure digits on sets of pilot indicators corresponding to the display panels These indicators provide the operator with a check on the proper setting of the display panels.

The panel selecting switch MSP is a well-known so-called minor switch having a rotary magnet for stepping its wiper step-by-step, off-normal springs which close on the first rotary step from normal, and a release magnet for restoring the wiper to normal. Switches MSD, MSC and MSW are similar minor switches. The switch FS is a well-known Strowger vertical and rotary switch having a vertical magnet for operating the wiper switch shaft in a vertical direction in response to a first received digit, a rotary magnet for rotating the wiper switch shaft to cause the wipers to engage a desired set of bank contacts in accordance with the second received digit, and off-normal springs which close on the first vertical step of the shaft, and a release magnet for restoring the wiper shaft to normal. There are eight wipers on the shaft, each wiper having access to one hundred bank contacts. The switch MSW selects the desired wiper of switch FS thereby making possible eight hundred selections, or flights.

Detail description

One arrival and one departure panel is shown in Fig. 7. In the arrival panel FL1, FL2 and FL3 each comprise twenty-four lamps for displaying the flight number. SL1, SL2, SL3 and SL4 are similar lamp groups for displaying the scheduled arrival time while DL1, DL2, DL3 and DL4 are similar lamp groups for displaying the due arrival time. Separate compartments each having a lamp, such as lamps 533, 534, 523, 543 and 553, for lighting the compartment to display stenciled information on a translucent cover plate. The stenciled information corresponds to the words flight, scheduled, due, Seattle, Portland, etc.

One of the display panels is diagrammatically illustrated in Fig. 5. FL1, FL2 and FL3 are the numerical lamp groups (like Fig. 8) for displaying the flight number and FR1, FR2 and FR3 are

the lamp relay groups (like Fig. 6) for controlling their respective numerical "flight" lamp groups. SL1, SL2, SL3 and SL4 are similar "scheduled" numerical lamp groups controlled by their respective "scheduled" lamp relay groups SR1, SR2, SR3 and SR4. DL1, DL2, DL3 and DL4 are similar "due" numerical lamp groups controlled by their respective "due" relay lamp groups DR1 (Fig. 6), DR2, DR3 and DR4. Only one of the lamp relay groups DR1 is shown in detail in Fig. 6.

The relays shown on the left hand side of Fig. 5 are the destination relays controlled by the flight relays of Fig. 3 for illuminating the corresponding compartment lamps in one display panel. Similar relays are in each of the display panels.

Fig. 3 indicates a group of flight relays which are common to all the arrival and departure panels, and shows three flight gang relays FR, SC and DD which are individual to one flight, in this case flight number 406. There may be as many as 800 flights, each flight having its three similar relays. The three gang flight relays of each flight are connected in multiple to a right hand terminal of a flight distributing frame FDF. Each left hand terminal of the flight distributing frame is connected to a particular one of the 800 bank contacts in the eight sets of bank contacts of flight selector FS. Jumpers can then be used to connect any flight relays with any desired bank contact; the jumpers permitting ease in changing flight numbers

The contacts of all flight relays, such as FR and SC, are connected to the right hand terminals of a code distributing frame, CDF, from where jumpers may be connected to certain of the left hand terminals and ground in order to code mark certain of the conductors extending from these contacts. The conductors extending from these contacts are connected to the respective lamp relay groups, such as shown in Fig. 6, for controlling the lamp relays therein in pairs according to the grounded code markings on these conductors. The conductors extending from the flight relays FR control the flight lamp relay groups FR1, FR2 and FR3 (Fig. 5), which in turn control the flight numerical lamps in the numerical flight indicators, such as FL1, FL2 and FL3 (Fig. 5) in all panels.

The contacts of the flight relays SC are code connected through the code distributing frame in a manner similar to that of the FR relays and code mark the conductors to the schedule lamp relay groups SR1, SR2, SR3, and SR4 (Fig. 5), which in turn control the schedule numerical lamps in the numerical schedule indicators, such as SL1, SL2, SL3 and SL4 (Fig. 5), in all panels.

The contacts of the flight relays DD are cross connected through a designation distributing frame DDF to ground certain of the conductors extending to all the panels so as to control the destination relays, such as relays 520, 530, 540 (Fig. 5) etc. These destination relays control the "due," "scheduled," "flight" and city destination lamps in their compartment panels, as indicated in Fig. 7. Jumpers are used on the code distributing frame CDF and on the destination distributing frame DDF in order to easily change to any desired code markings to any desired city destination.

Detail operation

The control operator operates the lever key K thereby completing circuits for operating relays

A in the control office, A' in the remote office, and A'' in the last office over a control trunk extending in series through the respective offices. Relay A at contacts 209 completes an obvious circuit for operating relay B. Relay B at contacts 211 prepares locking circuits for the transfer relays T1 to T4 inclusive; at contacts 212 prepares a point in the pulsing circuit; at contacts 213 opens the release circuits for the release magnets of switches MSP, FS, MSW, and MSD; and at contacts 214 opens one point in the release circuit to code switch MSC.

The control operator now dials the first digit to select the desired display panel in both the arrival and departure groups. The relay A in the local and remote offices fall back for each impulse of the dialled digits. Assuming that the first panel in the arrival and departure groups is to be selected then the control operator will dial the digit 1 to transmit 1 impulse. In response to this impulse relay A restores and at contacts 209 momentarily opens the circuit to slow-release relay B, which relay, however, is maintained in operated position during the impulsing period. At contacts 210 relay A completes a circuit for operating slow to release series relay C and the rotary magnet 204 of the panel selecting switch MSP. This circuit may be traced as follows: from ground, contacts 210, 212, 222, one branch extending through the winding of relay C to battery and the other branch extending by way of contacts 237, 277, 267, 257 and through the winding of rotary magnet 204 to battery. Relay C is also a slow to release relay and is maintained operated during the dialling period and releases shortly thereafter. At contacts 231 relay C completes a circuit for operating slow to release relay CR. Relay C at contacts 231 also completes the circuit through contacts 255 and through the lower and upper windings of transfer relay T1 to battery. At contacts 232 relay C opens a point in the release circuit for code switch MSC and at contacts 233 opens a point in the circuit extending to wiper 303 of switch MSW.

Rotary magnet 204 of panel selecting switch MSP operates its wiper 207 one step in response to the first digit to engage its first bank contact terminating conductor P1 which extends to the number 1 arrival and departure panels. Conductors P2 to P10, inclusive included in cable 208, extend respectively to only their corresponding panels. The operation of wiper 207 to its first bank contact has therefore selected only the number 1 arrival and departure panels. On the first step of the rotary magnet 204 the off normal contacts 205 close to prepare a circuit for release magnet 206. Relay CR, upon energizing, at contacts 241 prepares a circuit for grounding wiper 229 of switch MSD for a purpose to be described later on; at contacts 242 opens a point in the release circuit for code switch MSC and at contacts 242 grounds wipers 218 and 219 of code switch MSC.

The transfer relays T1 to T4 are differential two step relays which close only their "X" contacts 251 to 254 on their first step. Relay T1, upon energizing in its first step, closes only its "X" contacts 251 thereby connecting ground at contacts 211 through the upper winding of relay T1 to short circuit this upper winding to ground at contacts 231. This short circuit prevents the full operation of this relay.

After dialling the first digit, the relays A are re-energized over the dial loop and after an interval slow to release relay C restores. Contacts 232 of relay C grounds wiper 229 without effect at this time. Contacts 231 open the circuit to relay CR and at the same time removes the short circuit through the upper winding of relay T1 thereby permitting relay T1 to fully operate in its second step. This circuit may be traced from ground at contacts 211, 251, the upper and lower windings of relay T1 to battery. In this circuit the upper and lower windings now aid in the operation of this relay. Slow to release relay CR restores shortly after relay C without effect at this time. Relay T1, upon energizing in its second step, at contacts 252 opens a point in its initial circuit, at contacts 253 connects battery through resistance R through the upper winding of transfer relay T2, at contacts 254 transfers the initial operating circuit to relay T2, at 255 opens a point in its initial operating circuit, at contacts 256 and 257 transfers the pulsing circuit from the panel selecting switch MSP to the switch MSW, and at contacts 258 connects battery to wiper 207 and conductor P1 of wiper 208 to energize the locking relays LK (Fig. 5) in the number one arrival and departure panels.

The circuit for operating the locking relays LK may be traced as follows: from ground contacts 268, common conductor 293 multipled to all panels, through the winding of relays LK to conductor P1 in cable 208, first bank contact and wiper 207 of panel selecting switch MSP to battery at contacts 258. Locking relay LK at contacts 511 disconnects ground from the individual locking conductor 500 to thereby unlock and restore any operated panel relays such as relays 520 to 590 inclusive in the selected arrival and departure panels to thereby wipe out any previous display on these panels. The disconnection of ground from individual locking conductor 500 also causes the restoration of any operated lamp relays in the lamp relay groups FR1, 2, 3: SR1, 2, 3, 4: and DR1, 2, 3, 4 such as shown in detail in Fig. 6 and diagrammatically in Fig. 5. The restoration of these previously operated lamp relays will therefore wipe out any previous display in the numerical lamp groups.

The control operator now dials the second digit which is the first digit of the flight number and which is assumed to be flight number "406". In response to dialling the first flight digit 4 relay A restores and re-energizes 4 times to operate rotary magnet 300 of switch MSW as follows: from ground contacts 210, 212, 222 one branch energizing relay C and the other branch extending by way of contacts 237, 277, 267, 256, conductor 295 and through the winding of rotary magnet 300 to battery. Rotary magnet 300 steps the wiper 303 four steps to select wiper 324 of the flight selector FS. Off normal contacts 201 of switch MSW close on the first rotary step. Relay B is held operated during the pulsing period and relay C re-operates relay CR and causes the operation of transfer relay T2 in its first step. The circuit for operating relay T2 in its first step may be traced as follows: ground at contacts 231, 254, 265 one branch extending through the lower winding of differential transfer two step relay T2 and the other branch extending through the upper winding, contacts 262 and 253, resistance R to battery. Relay T2 being differentially wound operates in its first step to close only "X" contacts 261. The closure of contacts 261 completes a ground short circuit through the upper winding of T2 to prepare for

fully operating this relay when the short circuit is removed by the deenergization of relay C.

Relay C and then relay CR restore shortly after the second digit and relay C removes the short circuit from the upper winding of relay T2 to permit relay T2 to fully operate through its second step. This circuit may be traced from ground contacts 211, 261, through the upper and lower windings of relay T2 to battery. Relay T2, upon energizing in its second step, connects battery through resistance R and contacts 263 and 272 to the upper winding of relay T3; at contacts 264 prepares the initial energizing circuit for relay T3; at contacts 265 opens its initial energizing circuit; at contacts 266 and 267 transfers the pulsing circuit from the switch MSW to the vertical magnet 311 of the flight selector FS; and at contacts 268 opens the circuit to the lock relays LK in the number 1 arrival and departure panels. The restoration of the lock relays LK in these panels at contacts 511 again grounds the individual locking conductor 500 to prepare locking circuits for the lamp relay groups and the panel relays such as 520 to 590.

The control operator now dials the third digit 0, corresponding to the second digit of the flight number, causing relay A to transmit 10 impulses to the vertical magnet 311 and to re-operate relays C and CR. The circuit for operating the vertical magnet 311 may be traced as follows: from ground contacts 210, 212, 222, 287, 266, conductor 298 and the vertical magnet 311 to battery. The vertical magnet operates the wipers of the selector 10 vertical steps opposite the tenth level of bank contacts. The vertical off normal springs 312 operate on the first vertical step of the wiper shaft to prepare a circuit for release magnet 313. The operation of relay C causes the operation of transfer relay T3 in its first step in the same manner as previously described for transfer relays T1 and T2.

Relays C and CR again restore shortly after the third digit and relay C at contacts 231 removes the short circuit from transfer relay T3 to cause this relay to operate in its second step. At contacts 276 and 277 the impulsing circuit is transferred from the vertical magnet 311 to the rotary magnet 310 of the flight selector FS.

The control operator now dials the fourth digit "6," which is the last digit of the flight number, causing relay A to transmit 6 impulses to rotary magnet 310 and to re-operate relays C and CR. The circuit for operating rotary magnet may be traced as follows: ground contacts 210, 212, 222, 287, 276, conductor 297, and through the winding of rotary magnet 310 to battery. The rotary magnet steps the 8 wipers 321 to 328, inclusive, 6 rotary steps to engage the sixth bank contact in the 0, or selected level. The operation of relay C operates transfer relay T4 in a manner similar to that previously described for the other transfer relays.

The slow to release relays C and CR restore after the fourth digit and relay C at contacts 231 removes the short circuit from transfer relay T4 to cause this relay to operate in its second step. Relay T4 at contacts 284 prepares a digit pulsing circuit for rotary magnet 225 of switch MSD and at contacts 286 and 287 transfers the impulsing circuit from the rotary magnet of the flight selector FS to the rotary magnet 215 of the code switch MSC.

The control operator now dials 4 more digits corresponding to the due arrival time of this flight number 406 in order to display this due arrival time in the numerical lamp due section on the selected arrival panel. Assuming that for flight 406, the due arrival time is 1:20, the operator will accordingly dial the digits 0, 1, 2, and 0.

In response to dialling of the fifth digit 0, which is the first digit of the due arrival time, the relay A is operated 10 times to step wipers 218 and 219 of the code switch MSC 10 steps. The circuit for operating the rotary magnet 215 and the code switch may be traced as follows: ground contacts 210, 212, 222, 286, rotary magnet 215 to battery. The off normal contacts 216 close on the first rotary step of switch MSC to prepare a circuit for the release magnet 217. Relays C and CR operate as before and relay C closes a circuit for operating rotary magnet 225 of switch MSD to step wiper 229 into engagement with its first bank contact. This circuit extends from ground, contacts 231, 254, 264, 274, 284, and the winding of rotary magnet 225 to battery. Off normal springs 226 and 227 close on the first rotary step of wiper 229 from normal.

After dialling the fifth digit relay C restores shortly before relay CR restores and at contacts 232 completes the circuit for operating due relay SD1 as follows: ground, contacts 232, 241, wiper 229 in engagement with its first bank contact, conductor S1 and through the winding of relay SD1 to battery. At contacts 233 relay C completes a circuit to operate the selected flight relays FR, SC and DD as follows: ground, contacts 233, off normal contacts 226 of switch MSD, conductor 296, wiper 303 in engagement with its fourth bank contact, wiper 324 in engagement with the sixth bank contact in the tenth level, conductor 330 extending to a left hand terminal of the flight distributing frame FDF, jumper 331, right hand terminal of FDF, conductor 332 and through the windings of relays FR, SC, and DD in multiple to battery. Relay SD1 completes circuits over its contacts 411 to 415 while relay CR is still operated for energizing certain lamp relays in lamp relay group DR1 Fig. 6 of the selected arrival panel in a manner to be described in detail later on.

Flight relay FR, upon energizing, at its contacts 341 and 345 complete circuits for energizing lamp relays, corresponding to relays LR1 and LR5, in the flight lamp relay group FR1. Only one of the lamp relay groups is shown in detail in Fig. 6 and it will be understood that similar lamp groups are provided, one for each numerical lamp indicator in each panel. With this understanding the circuit for operating relay LR1 in the flight lamp relay group FR1 may be traced as follows: from ground (Fig. 3) left hand terminal of code distributing frame CDF, jumper 333, contacts 341, conductor 342 in cable 305 extending to the flight lamp relay groups FR1 in the number one arrival and number one departure panels, over a conductor corresponding to conductor 451 in Fig. 6, through the upper winding of relay LR1 in the FR1 lamp relay groups to common conductor P1 in cable 208, first bank contact and wiper 207 of panel selecting switch MSP, and contacts 258 to battery. A similar circuit is partially completed over conductor 342 of cable 305 to the other flight lamp relay groups in all of the other panels, but this circuit is not completed because the panel switch MSP has selected and connected battery to only the number one arrival panel and to the number one departure panel. Since battery is not connected to the other panels 2 to 10, inclusive,

only the lamp relays of the selected panels can be operated.

The circuit for operating the relays LR5 in both the selected arrival and departure panels may be traced as follows: ground Fig. 3, left hand terminal of code distributing frame CDF, jumper 334, contacts 345, conductor 346 in cable 305 extending to the flight lamp relay groups FR1 in the selected panels, over a conductor corresponding to conductor 455 in Fig. 6, through the winding of relays LR5 in the FR1 lamp relay groups to common conductor P1 in cable 208 which is connected to battery through wiper 207. Since the panel selecting switch MSP has selected only the first arrival and departure panels by connecting battery to conductor P1, the lamp relays of the other panels are not operated.

Relays LR1 and LR5 in lamp relay groups FR1 in the number 1 arrival and departure panels operate and complete locking circuits through their lower windings to panel locking conductor 500, which is grounded at contacts 511 by their individual panel locking relays LK. With relays LR1 and LR5 in lamp relay group FR1 operated the lamps 3, 6, 7, 9, 11, 13, 14, 15, 16, 19 and 23 (Fig. 8) in lamp group FL1 are illuminated to display the digit 4. The circuit for lighting lamp 3 extends from ground, contacts 659 to terminal 3 which is connected to lamp 3 of Fig. 8 and battery. The circuit for lighting lamps 6 and 13 extends from ground by way of contacts 614, 655 and 624 to terminals 6 and 13 which are connected to lamps 6 and 13 and battery. In a similar manner circuits for illuminating the remaining lamps may be traced to the operated contacts of relays LR1 and LR5 for outlining the digit 4. Relay FR also completes grounded code marking circuits through contacts 354 and 355 and over conductors 353 and 357 for operating two lamp relays, corresponding to relays LR4 and LR5, in lamp relay group FR2 in the selected panels in a manner similar to that described for the operated lamp relays in group FR1. These relays LR4 and LR5 complete circuits to illuminate certain lamps in combination in lamp groups FL2 to display the digit 0.

In addition relay FR at contacts 362 and 364 code mark conductors 363 and 365 operate 2 lamp relays, corresponding to relays LR2 and LR4, in lamp relay groups FR3 in the selected panels in a manner similar to that described for the operated lamp relays in group FR1. These relays LR4 and LR5 complete circuits to illuminate certain lamps in combination in lamp groups FL2 to display the digit 0.

In addition relay FR at contacts 362 and 364 code mark conductors 363 and 365 operate 2 lamp relays, corresponding to relays LR2 and LR4, in lamp relay groups FR3 in the selected panels in a similar manner. These relays LR2 and LR4 complete circuits in lamp groups FL3 to display the digit 6. The operation of the flight relay FR has accordingly caused the number 1 arrival and the number 1 departure panels to display the flight number 406 on the lamp groups FL1, FL2 and FL3.

The operated relay SC at contacts 351 and 352 code mark circuits for operating lamp relays LR1 and LR2 in lamp group SR1, at contacts 361 and 363 operate relays LR1 and LR3 in lamp group SR2 at contacts 374 and 375 operate relays LR4 and LR5 in lamp group SR3 and at contacts 372 and 373 operate lamp relays LR2 and LR3 in the selected arrival panel. Similar circuits are closed by relay SC over cable 309 to the selected departure panel to control the lamp relays in the "schedule" lamp groups.

The operation of relays LR1 and LR2 in groups SR1 cause the digit 1 to be outlined in lamp groups SL1. In a similar manner the digits 2, 0 and 5 are displayed on lamp groups SL2, SL3, and SL4 in the selected arrival panel to indicate that the scheduled arrival time of flight 406 is 12:05. In a similar manner the corresponding scheduled lamps in the selected departure panel display the scheduled departure time of flight 406 which in this instance is assumed to be 12:15.

The operation of the destination relay DD closes circuits for operating the destination relays, such as relay 530, 540—590 over cables 306 and 308 in the selected arrival and departure panels. For example, destination relay 540 which controls the lighting of the Seattle panel compartment lamp 543 is operated over a circuit extending from ground, left hand terminal of the destination distributing frame DDF, jumper, contacts 383, conductor 393 in cable 306, upper winding of relay 540 to panel conductor P1 which is connected to battery as previously described. In a similar manner the desired destination relays 530, 550, 560, 570, 580, 590 and etc. are operated in both the selected arrival and departure panels to control their respective compartment lamps to display the stopping points in this selected flight. As shown, relay 530 controls the lighting of the flight and scheduled compartment lamps 533 and 534. These destination relays, upon operating, close locking circuits through their lower windings to panel locking conductor 500 which is grounded at contacts 511 of locking relay LK.

A special operating and locking circuit is provided for panel relay 520 which controls the lighting of the "due" lamp 523. The circuit for operating relay 520 may be traced as follows: ground contacts 223, conductor 299, contacts 381, upper winding of relay 520 to battery on conductor P1. Relay 520 operates to light the "due" lamp 523 and at contacts 521 closes a locking circuit through its lower winding which is controlled by lamp relay LR3 in the lamp relay group DR1 over conductors 501 and 509 and contacts 539.

Returning now to the time shortly after dialling the fifth digit 0 when relay C restores and relay SD1 was operated as previously described; it will be remembered that the code switch MSC has been operated ten steps to cause its wipers 218 and 219 to engage their tenth bank contacts. Before relay CR falls back, the wipers 218 and 219 are grounded to thereby connect ground to conductors C4 and C5 to complete circuits through operated contacts 414 and 415 of relay SD1 and over conductors 454 and 455 for operating lamp relays LR4 and LR5 in lamp relay group DR1 in Fig. 6. Relays LR4 and LR5 operate and complete locking circuits through their lower windings to locking conductor 500. Lamp relay group DR1 corresponds to the tens hour of the "due" arrival time. As the digit 1 is the only digit in the tens hour, the circuits controlled by the lamp relays LR in group DR1 have been arranged so that the connections from the terminals which extend to the lamps of Fig. 8 are only connected so that the tens numeral 1 only can be displayed. The connections between the lamps and these terminals are disconnected to prevent the operated LR relays from displaying the numerals 2 to 10 inclusive. Under this condition the transmission of the digit 0 for the first and tens hour

digit of the due time is not displayed on the lamp group DL1 and is thereby left dark.

Relay CR releases shortly after relay C restores and at contacts 243 removes the code markings from conductor C4 and C5. At contacts 241 relay CR opens the circuit to relay SD1 which restores and at contacts 242 completes a circuit for operating release magnet 217 of the code switch MSC as follows: ground contacts 232, 242, off normal contacts 216, and through the winding of release magnet 217 to battery. The operation of release magnet 217 restores wipers 218 and 219 to their normal positions and opens the off normal contacts 216 to open the circuit to release magnet 217.

The control operator will now dial the sixth digit which corresponds to the units hour of the due arrival time. Assuming that the due arrival time is 1:20, the operator accordingly dials the digit one to cause relay A to restore and re-operate relays C and CR and to step the code switch MSC one rotary step in the manner previously described. The operation of relay C again completed the circuit for operating the rotary magnet 225 of switch MSD to step wiper 229 to engage its second bank contact. Shortly after dialling this sixth digit relay C restores before relay CR and completes a circuit for operating relay SD2 as follows: ground contacts 232, 241, wiper 229, conductor S2 and through the winding of relay SD2 to battery. Relay SD2 at contacts 421 and 422 complete circuits for operating lamp relays LR1 and LR2 in lamp relay group DR2 from grounded contacts 243, wipers 218 and 219, conductors C1 and C2, contacts 421 and 422, conductors 461 and 462 in cable 401 extending to lamp relay group DR2, and through lamp relays LR1 and LR2 to the individual panel conductor P1 which is connected to battery over wiper 207 and contacts 258. Relays LR1 and LR2 in group DR2 complete circuits to the lamp panel DL2 to display the digit 1 in a manner apparent from the foregoing description.

Relay CR restores shortly after relay C to open the circuit of relay SD2 at contacts 241 and at contacts 242 again completes the circuit for restoring the code switch to normal position.

The control operator now dials the seventh digit corresponding to the tens minute of the due arrival time. In response to dialling the digit 2 relays C and CR are re-operated and the code switch MSC wipers are stepped to engage their second bank contacts as previously described. Relay C again operates rotary magnet 225 to step wiper 229 to its third bank contact. Shortly after dialling this digit relay C restores to operate relay SD3 over conductor S3. Relay SD3, upon operating, at contacts 431 and 433 complete circuits for operating the lamp relays LR1 and LR3 of the lamp relay group DR3 in accordance with the setting of the code switch MSC. These lamp relays operate in a manner apparent from the foregoing description in lamp panel DL3 to display the digit 2. Shortly after relay C restores relay CR will restore to open the circuit to relay SD3 and to cause the code switch MSC to restore to normal as previously described.

The control operator now dials the eight digit 0 according to the units minute of the due arrival time. Relay A in operating transmits 10 impulses to step code switch MSC to its tenth bank contacts. Relay C operates the rotary magnet 225 to step wiper 229 to its fourth bank contact to prepare the circuit for operating relay SD4. Relay C restores shortly after dialling the eight digit to ground conductor S4 and operate relay SD4. Relay CR, being in operated position at contacts 243 grounds conductors C4 and C5 through wipers 218 and 219 and extends these code ground markings over contacts 444 and 445 of relay SD4 to conductors 484 and 485 included in cable 403 to operate lamp relays LR4 and LR5 in group DR4. The operation of these latter relays control circuits for lighting the lamps in DL4 to display the digit 0. From the foregoing description it will be seen that the selected arrival panel now displays the flight number 406 the scheduled arrival time 12:05 and the due arrival time 1:20 as well as lighting the schedule, due, flight, and destination compartment lamps.

The control operator now dials 4 more digits corresponding to the "due" departure time of this flight 406 in order to display the departure time in the due lamp panels on the selected departure panel. The code switch MSC responds to each impulse of each dialled digit to code mark the conductors C1 to C5 in accordance with each digit dialled and releases to normal after each digit in the manner previously described. The due sequence switch MSD takes one step for each dialled digit to sequentially operate successive due relays, corresponding to relays SD1 to SD5. These due relays, indicated by the rectangle in Fig. 2, are successively operated over conductors S5 to S8 to extend the coded markings on conductors C1 to 5 over the conductors of cable 200 to control the lamp relays in the respective lamp relay groups of the selected departure panel in a manner similar to that described for the selected arrival panel. Assuming that the due departure time is 1:50, the control operator dials the digits 0, 1, 5, and 0 to cause the due departure lamp to display 1:50; the "0" digit of the tens hour is not displayed for the same reasons set forth hereinbefore and such lamp panel is left dark.

The selected departure panel has now been operated to display the flight number 406, the scheduled departure time 12:15, the due departure time 1:50, and the desired compartment lamps have been lighted to display the desired information and stopping points.

Referring to Fig. 7, it will be seen that each panel has three special compartments for displaying "on time," "delayed" and "cancelled." When flight 406 is on time there is no need to display the "due" time since it would be the same as the schedule time. The same is true for a delayed flight in case it is not known when such flight is due. Also, if a flight is cancelled it will naturally have no due arrival or departure time. Special circuits have been provided so that when any one of the three above conditions are to be displayed, the due lamp panels will not display any digits.

It will first be assumed that the panels shown in Fig. 7 are to be operated to display that flight 406 is on time in which case the due lamp panels will be dark. The control operator dials the first digit 1 to select the desired panels, then dials the flight digits 4, 0, and 6, and then dials the "on time" digit 5 to cause the selected panels to display the flight number 406, the scheduled times, and the desired compartment destination stopping points as previously described. The dialling of the "on time" digit 5 causes the due compartment lamp 523 to be extinguished and also causes the compartment "on time" lamp 514 to illuminate its compartment.

Before describing the detail operations for causing the lighting of the "on time" lamp, it

should be mentioned that the lamp relay groups, such as DR1—Fig. 6, for controlling the lamp panels, such as DL1, have additional circuits provided especially for operating the "on time," "delayed" and "cancel" lamps. It should also be mentioned that the terminals for causing the display of digits 2 to 0 in the lamp panels DL1 are left disconnected so that the lamp panels DL1 can only display the digit 1 as there are no tens hour digits beginning with digits 2 to 0, inclusive. Under these conditions when the "on time" digit 5, the "delayed" digit 9, or the "cancelled" digit 8 is dialled, correspondingly numbered digits are not displayed on the lamp panels DL1.

In response to dialling the "on time" digit 5 for the fifth digit, the code switch MSC is operated to ground conductors C2 and C3, and the release of relay C operates relay SD1 to connect grounded conductors C2 and C3 to conductors 452 and 453 by way of contacts 412 and 413 to operate relays LR2 and LR3 in group DR1 over conductor P1 which is connected to battery. Relays LR2 and LR3 operate and lock to conductor 500 and at contacts 631 and 641 ground conductor 504 to light "on time" lamp 514 in the selected panel. Relay LR3 at contacts 639 opens the locking circuit of relay 520 which deenergizes and extinguishes the due compartment lamp 523. Relay LR3 at contacts 632 completes a circuit for operating relay E as follows: ground, contacts 416, conductor 291, lower winding of relay E, conductor 292, contacts 632, conductor P1 to battery through wiper 207 and contacts 258. Relay E at contacts 221 locks to grounded contact 211, at contacts 222 opens the pulsing circuit and the circuit of relay C to prevent any subsequent pulses from being effective, and at contacts 223 opens the original energizing circuit of relay 520 to prevent its reoperation.

In case the "delayed" digit 9 is dialled in place of the "on time" digit 5, the code switch MSC is operated to ground conductors C3 and C5 to operate relays LR3 and LR5 in group DR1. Relays LR3 and LR5 lock operated and at contacts 631 and 611 grounds conductor 502 to light "delayed" lamp 512 in the selected panel. Relay LR3 causes the due lamp 523 to be extinguished and completes the circuit for operating relay E as previously described.

In case the "cancelled" digit 8 is dialled instead of the "on time" or "delayed" digits, the code switch MSC is operated to ground conductors C3 and C4 to operate relays LR3 and LR4 in group DR1. Relays LR3 and LR4 lock operated and at contacts 631 and 621 grounds conductor 503 to light "cancelled" lamp 513 in the selected panel. Relay LR3 causing the due lamp 523 to be extinguished and relay E to be operated as previously described.

Referring now to Figs. 10 and 11, a general description will first be given when it is necessary to provide the control operator with a monitoring or a so called "pilot selector" to enable the operator to check on the setting of the display panels which are not visible from the operator's position. The contacts 209 and 210 of relay A (Fig. 2) are shown in Fig. 10 for controlling relays similar to those shown in Fig. 2. The sequence switch MSD' and the indicator selecting switch MSP' are minor switches similar to switches MSD and MSP of Fig. 2. The bank contacts of switch MSD' are multiplied to corresponding individual "due" indicators in each indicator set over conductors D1 to D8 and conductors F1 to F3 are similarly multiplied to corresponding individual "flight" indicators in each indicator set. The first bank contacts of switch MSP' are multipled to all individual indicators in only the first indicator set and the remaining bank contacts are multipled to their respective indicator sets, it being understood that there is an indicator set for each set of display panels, each display set comprising an arrival display panel and a departure display panel.

Fig. 11 shows only one set of indicators, corresponding to the number 1 arrival and departure display panels, on which the flight number 406, the due arrival time 01:20 and the due departure time 01:50 are displayed. The indicator sets 2 to 10 are not shown. The flight indicator on which the numeral 4 is displayed is shown in detail in the upper portion of Fig. 11. These indicators are well known and comprise an operating magnet for operating an armature engaging a star wheel mounted on a rotatable drum. The drum having numerals spaced around its periphery and which are visible through an opening in its face plate. Mounted on the same shaft with the drum is a cam for controlling a set of contacts which control the circuit of the indicator magnet.

When the control operator closes the key K (Fig. 2) relay A is operated over the control loop and at contacts 209 closes the circuit for operating relay B'. Relay B' at contacts 714 prepares a locking circuit for relays T11 to T14, at contacts 712 prepares a pulsing circuit for relay C' and switch MSP' and at contacts 713 opens the release circuit to switches MSP' and MSD'.

In response to dialling the first digit 1 to select the desired display panels relay C' and rotary magnet 704 are operated over a circuit extending from contacts 210, 712 one branch extending to the slow to release relay C' and the other branch extending over contacts 759 and through the winding of rotary magnet 704 to battery. The rotary magnet 704 steps the wipers 707 and 708 one step to select the first set of indicators at the same time that the number one arrival and display panels are selected by switch MSP in Fig. 2. Due to the operation of switch MSP' only one set of indicators are conditioned for operation dependent upon the setting of wipers 707 and 708. Relay C' at contacts 731 operates relay S and relay CR', at contacts 732 disconnects battery through resistance R2 from wiper 707. The operation of relay S is without effect at this time. Relay CR' at contacts 741 closes a circuit for operating 2-step differential relay T11 in its first step to close its X contacts 751. Relays T12 to T14 are similar to relays T1 to T4 and operate in a similar manner described for relays T1 to T4. At contacts 742 relay CR' completes the circuit for operating relay PS. Relay PS operates and through its contacts connects interrupted ground to the conductors included in cable 700 to prepare circuits for restoring any of the operated indicators in the selected indicator set.

Shortly after the first digit relay C' restores to open the circuit to relays S and CR'. At contacts 732 relay C' completes a circuit for causing the selected set of indicators to be restored to their normal positions before the slow to release relay CR' restores and the relay T11 operates in its second step. The operated indicators will have their contacts 810 closed and at this time a circuit may be traced from ground through the interrupter I, operated contacts of relay PS, the conductors included in cable 700, one such cir-

cuit multipled to conductor F1, terminal 816 extending to the first flight indicator through the winding of magnet 800, off normal contacts 810, conductor 812, terminal 813, conductor G1 individual to the first set of indicators, first bank contact and wiper 707 of switch MSP', contacts 732 and through resistance R2 to battery. Similar circuits are also completed through any of the flight, due arrival, and due departure indicators of the first indicator set in case such indicators are not in normal position. In these circuits the motor magnets, such as 800, are automatically stepped by the grounded interrupter I to step drum 802 and cam 805 to normal position at which time the contacts 811 close and the contacts 810 open. As soon as the contacts 810 open the circuit through the motor magnet of the indicator is interrupted with the drum 802 in its normal position in which position the indicator will show a blank display.

Relay CR' restores shortly after relay C' restores and at the contact 742 opens the circuit for relay PS to disconnect the interrupter I from the indicators after they have all reached their normal positions. At contacts 741 relay CR' removes the short circuit from the upper winding of relay T11 to permit this relay to fully energize and operate its contacts in its second step in the same manner as described for the operation of relay T1. Relay T11, upon energizing in its second step, at contacts 751 completes a locking circuit for itself through its two windings in series, at contacts 752 opens a point in its original energizing circuit, at contacts 753 prepares a circuit for operating relay T12 in its first step, at contacts 754 prepares another point in the circuit to relay T12, at contacts 755 opens another point in its initial energizing circuit, at contact 756 prepares another point in the circuit for relay T12, at contacts 757 opens the circuit to relay CR', at contacts 758 and 759 transfers the impulsing circuit from rotary magnet 704 to conductor F1 extending to the first flight indicator, the contacts 734 prepare a stepping circuit for operating the indicator one step from normal and at contacts 733 prepares a circuit for operating the indicator magnet after it has been stepped from normal.

When the control operator dials the first digit 4 of the flight number relay A restores and reoperates 4 times. Relay B' is a slow to release relay and will maintain its armature attracted throughout the dialling period. Relay C' is again operated in parallel with the pulse circuit and each time relay A restores an impulse is sent to the magnet 800 of the first flight indicator. The first impulse operates the motor magnet 800 to step out of normal position over the following circuit: from ground contacts 210, 712, 758, 767, conductor F1, terminal 816, winding of motor magnet 800, off normal contacts 811, conductor 814, terminal 815, conductor 1, first bank contact and wiper 708, contact 734, and through resistance R2 to battery. The operation of drum 802 from its normal position steps the lug 806 on cam 805 to open contacts 811 and close contacts 810 in order to prepare for operating the indicator in subsequent steps. The second pulse for operating indicator magnet 800 extends over the same path as previously described except that the circuit now extends by way of contacts 810 which are now closed, conductor 812, terminal 813, conductor G1 first bank contact and wiper 707 of switch MSP', contacts 733 and through resistance R2 to battery. The third and fourth impulses step the indicator to display the digit 4 through its face plate 804. The first flight indicator has now been operated 4 steps from normal to display the digit 4. Relay C' at contacts 731 again operates relay S without effect at this time and also operates relay T12 in its first step over the following circuit: ground contact 731, 756, 754, 765, one branch extending through the lower winding of relay T12 and the other branch extending through the upper winding through contacts 762 and 753 to battery through resistance R1. Relay T12 closes its X contacts 761 to short circuit its upper winding and to prepare a circuit for fully energizing the relay when relay C' restores.

Shortly after dialling the second digit, slow to release relay C' restores and at contacts 731 opens the circuit to relays S and also removes the short circuit from relay T12 to allow it to operate in its second step, and closes contacts 732 without effect since the contacts 733 and 734 are now closed. Relay T12 operates in its second step and at contacts 766 and 767 transfers the impulsing circuit from the first flight indicator to the second flight indicator over conductor F2. In response to the third digit 0 the second flight indicator is stepped to display the digit 0 in a manner similar to that described for the first flight indicator. The relay C' again operates to operate relay T13 in its first step as follows: ground contacts 731, 756, 754, 764, 775, through the lower winding to battery and through the upper winding to battery through contacts 772, 763 and 753. Relay T13 closes only its X contact 771 as previously described. When relay C' restores after the third digit relay T13 is operated in its second step and transfers the pulsing circuit to the third flight indicator at contacts 776. In response to the fourth digit 6 the third flight indicator is operated to display digit 6 and relay C' operates relay T14 in its first step. Relay C' also operates relay S and when relay C' restores after the fourth digit relay T14 operates in its second step to transfer the pulsing circuit to wiper 729 of switch MSD' at contacts 786. Relay T14 also completes a circuit for operating the rotary magnet 725 of switch MSD' before relay S restores. The circuit for operating rotary magnet 725 may be traced as follows: ground contacts 735, 736, 784 and through the winding of magnet 725 to battery. The operation of the motor magnet 725 steps the wiper 729 to engage its first bank contact and close the off normal contact 727 to prepare the circuit for the release magnet 726. After stepping the wiper 729 to its first bank contact the relay S restores to open the circuit of magnet 725. The 3 flight indicators have now been set to display the flight digits 406 and the switch MSD' has been positioned on its first bank contact to select the first due arrival indicator over conductor D1.

In response to dialling the fifth digit 0 relay C' is re-operated and 10 impulses are sent to operate the first due arrival indicator of the selected set to display the digit 0 as follows: ground contacts 210, 712, 758, 776, 786, wiper 729 in engagement with its first bank contact, conductor D1 extending to the first due arrival indicator, through the operating magnet and cam springs thereof over the conductors G1 and 1 to wipers 707 and through the contacts 733 and 734 to battery at resistance R2. Relay C' re-operates relay S which at contacts 736 prepares a circuit for stepping the switch MSD' another step. After the fifth digit relay C' restores and during the

interval while relay S is still operated the rotary magnet 725 of switch MSD is operated to step wiper 729 to engage its second bank contact to select the second due arrival indicator of the selected set. This circuit may be traced as follows: ground contacts 735, 736, 784 and magnet 725 to battery. Relay S restores shortly after relay C' to release magnet 725.

In response to the sixth digit 1 relay C', followed by relay S, are operated and the second due arrival indicator is stepped one step to display digit one over circuits similar to that previously traced for the first due arrival indicator. C' restores shortly after the sixth digit and while relay S is still energized again operates magnet 725 to step wiper 729 to its third bank contact to select the third due arrival indicator over conductor D3 after which relay S restores. In the same manner as just described the third and fourth due arrival indicators are stepped to display digits 2 and 0. The 4 due departure indicators of the selected set are stepped to display digits 0, 1, 5 and 0 in response to dialling the four due departure digits 0, 1, 5 and 0. The wiper 729 of switch MSD' takes one step after each digit in the same manner as previously described. The indicators of the selected set have now been set to display the flight number 406, the due arrival time 1:20 and the due departure time 1:50 corresponding to the settings on the display panels thereby giving the control operator a check on the display panels. In case the control operator dials the special "on time," "delayed," or "cancelled" digits these specified numerals would be displayed on the first due arrival indicator in a manner apparent from the foregoing description.

Release operation

After completing the display on the display panels and on the operator's monitor or pilot selector, the control operator will restore the key K (Fig. 2) thereby releasing relay A in the control office and the similar relays in the remote offices to cause the controlling apparatus to restore to normal without disturbing the display set up. Relay A, upon restoring, at contacts 289 opens the circuit to relays B and B' which restore after an interval. Relay B at contacts 211 opens the locking circuits to relay RE and T1 to T4 to cause their release. At contacts 213 relay B grounds conductor 294 to complete circuits to restore switches MSD, MSP, FS and MSW. The circuit for restoring switch MSD extends from grounded conductor 294 and through the off normal springs 227 and the winding of release magnet 226 to battery. Off normal springs 227 of switch MSD opens the circuit to the release magnet when the wiper 229 is fully restored to normal. The circuit for the release magnet 206 of switch MSP extends through the off normal contacts 205 and after the magnet has restored the wiper 207 to normal the off normal springs 205 open the circuit with its release magnet. The circuit to the release magnet 313 of the flight selector FS extends through off normal contacts 312 and these off normal contacts open when the wiper shaft is fully restored to normal. The release magnet 302 is operated over a similar circuit for restoring the switch MSW to normal. The operated flight relays FS, SC and DD are restored to normal in response to the above described switch release operations. Relay B at contacts 213 and 214 completes a similar circuit three off normal contacts 216 for operating the release magnet 217 of the code switch MSC to restore it to its normal position. The restoration of the flight relays FR, SC and DD are ineffective to cause a restoration of the operated lamp relays in the operated lamp relay groups, such as DR1, and the panel destination relays, such as relays 520—596, because these operated relays are locked operated to grounded conductor 500.

Relay B' (Fig. 10), upon restoring, at contacts 714 opens the locking circuits of relays T11 to T14 to cause their release. At contacts 713 relay B' completes circuits for restoring switch MSD' and MSP' through their off normal contacts 727 and 705 for operating their respective release magnets 728 and 706. The indicators remain in their set positions because no restoring circuits are completed to cause their restoration. The control apparatus in all offices have now been restored to normal and may now be re-operated to cause a new display on the same or other display panels and indicator sets.

Having described the invention, what is considered to be new and is desired to be protected by Letters Patent will be set forth in the following claims:

What is claimed is:

1. In a transportation indicator system, a plurality of display panels, flight lamp groups in each panel for visually displaying digits corresponding to any flight number, schedule lamp groups in each panel for visually displaying digits corresponding to the scheduled time of arrival of any flight, destination lamps in each panel for visually indicating destination stopping points for any flight, lamp group relays individual to each lamp group in each panel for controlling the lamps in its lamp group to display digits, panel relays in each panel for controlling said destination lamps, sets of flight relays common to all said panels, each set corresponding to a particular flight, means for selecting a particular one of said display panels, means operative in response to the dialling of the digits corresponding to a flight number for operating a corresponding set of flight relays, circuits completed by the operated set of flight relays for operating said lamp group relays in only said selected panel to control said lamp groups to display said flight number and the scheduled time of arrival of said flight, and other circuits completed by said operated set of flight relays for operating certain ones of said panel relays in only said selected panel to light destination lamps corresponding to the stopping points of said flight.

2. In a transportation indicator system for displaying the flight number, the scheduled time of arrival of the displayed flight number, and for indicating the stopping points of the displayed flight number on a selected display panel as claimed in claim 1 which includes further means responsive to the selection of one of said panels for wiping out any previous display and indication on said selected panel.

3. In a transportation indicator system for displaying the flight number, the scheduled time of arrival of the displayed flight number, and for indicating the stopping points of the displayed flight number on a selected display panel as claimed in claim 1 including an operating source of current, and means for connecting said source to only the panel selected by said panel selecting means to complete said circuits and said other circuits for operating the lamp

group relays and the panel relays in only the said selected panel.

4. In a transportation indicator system, a plurality of display panels, flight lamp groups in each panel for visually displaying digits corresponding to any flight number, schedule lamp groups in each panel for visually displaying digits corresponding to the scheduled time of arrival of any flight, lamp group relays individual to each lamp group in each panel for controlling the lamps in its lamp group to display digits, sets of flight relays common to all said panels, each set corresponding to a particular flight, contacts on said flight relays, conductors extending from said contacts to said lamp group relays in all said panels, a code distributing frame for code marking certain of said conductors through operated ones of said contacts in accordance with flight numbers and in accordance with the scheduled time of arrival of said flights, means for selecting a particular one of said display panels, means operative in response to dialling the digits of a flight number for operating a corresponding set of flight relays, circuits completed over the contacts of the operated flight relays, the code marked conductors and said code distributing frame to the lamp group relays of only said selected panel to operate the lamp group relays of only the selected panel in accordance with said code markings, and other circuits completed by the operated lamp group relays for causing the lamp groups of said selected panel to display said flight number and the scheduled time of arrival of said flight.

5. In a transportation indicator system, a plurality of display panels, flight lamp groups in each panel for visually displaying digits corresponding to any flight number, schedule lamp groups in each panel for visually displaying digits corresponding to the scheduled time of arrival of any flight, due lamp groups in each panel for visually displaying digits corresponding to the due time of arrival of any flight, lamp group relays individual to each lamp group in each panel for controlling the lamps in its lamp group to display digits, sets of flight relays common to all said panels, each set corresponding to a particular flight, a source of operating current, means for selecting a particular one of said panels by connecting said source to only said selected panel, means responsive to the dialling of the digits corresponding to a flight number for operating a corresponding set of flight relays, circuits closed by said operated set of flight relays and completed to said source connected to said selected panel for operating only the flight lamp group relays and the schedule lamp group relays in said selected panel, other circuits completed by the operated lamp group relays to cause the lamps in the flight lamp group to display the digits of the dialled flight number and to cause the lamps in the schedule lamp group to display digits corresponding to the scheduled time of arrival of said flight, a code switch, conductors terminating in said code switch, a sequence switch, means responsive to dialling the digits corresponding to the due arrival time of said selected flight for operating said code switch and said sequence switch, means controlled by said sequence switch for successively connecting said conductors to successive ones of said groups of due lamp relay groups, wipers on said code switch for grounding said conductors in code cominations in accordance with the successive dialled digits of said due arrival time to operate corresponding relays in successive due lamp relay groups over circuits completed to said source connected to only said selected panel, and circuits connections completed by said operated due lamp relays for lighting the lamps in said due lamp groups in said selected panel to display the due time of arrival of said selected flight.

6. In a transportation indicator system, a display panel, a plurality of lamp sets in said panel divided into a first group, a second group, and a third group, each group containing a plurality of said sets and each set comprising a plurality of lamps so arranged that the display of any digit requires the illumination of a combination of said lamps to outline such digits, a group of lamp relays individual to each said set of lamps, code marking means, means responsive to the dialling of a special number for selectively operating said code marking means, coded circuits completed by the selective operation of said code marking means for operating certain combinations of said relays in the successive groups of relays which are individual to said first group of lamp sets and for operating predetermined combinations of said relays in the successive groups of relays which are individual to said second group of lamp sets, the said certain combinations of operated relays in the said successive relay groups corresponding to the successive dialled digits of said special number and the said predetermined combinations of operated relays in the other successive groups having no correspondence to the successive dialled digits of said special number, circuits completed by the said operated certain combinations of said relays for illuminating a plurality of lamps in successive sets of said first lamp group to outline the successive digits of said dialled special number, other circuits completed by the said operated predetermined combinations of said relays for illuminating a plurality of lamps in successive sets of said second lamp group to outline successive digits of a number different from the digits of said dialled special number, means responsive to dialling the successive digits of another number for successively operating other combinations of said relays in successive relay groups which are individual to said third group of lamp sets, the said other combinations of relays operated being dependent upon the digits dialled, and further circuits completed by said operated other combinations of relays for illuminating a plurality of lamps in successive sets of said third lamp group to outline the successive digits of said dialled other number.

7. In a transportation indicator system a plurality of display panels, first, second, and third lamp groups in each panel, each group comprising a plurality of sets of lamps, each set containing a plurality of lamps so arranged that the display of any digit requires the illuminating of a combination of said lamps to outline such digits, a lamp relay group individual to each set of lamps, sets of code marking relays common to said panels, each set of relays corresponding to a particular number, conductors extending from said code marking relays to all said lamp relay groups, a source of current, means for selecting one of said panels by connecting said source to only said selected panel, means responsive to the dialling of a special number for selectively operating one set of code marking relays, contacts on said operated set of code marking relays completing circuits by grounding predetermined ones of said conductors in code combinations to operate cor-

responding relays in combination in the lamp relay groups individual to said first and second lamp groups in only the said selected panel having said source connected thereto, circuits completed by the operated combination of relays in said lamp relay groups for illuminating a plurality of lamps in successive sets of said first lamp group to outline the successive digits of said dialled number and for illuminating a plurality of lamps in successive sets of said second lamp group to outline the successive digits of a multi-digit number, other code marking conductors common to all said panels, code marking means, means responsive to dialling the successive digits of another multi-digit number for operating said code marking means to ground some of said other code marking conductors in code combinations in accordance with each digit dialled, sequence connecting means controlled by said successive dialled digits of said other multi-digit number for sequentially connecting said grounded code combinations of said other code marking conductors to successive ones of said lamp relay groups individual to said third lamp groups, other combinations of relays in the successive lamp relay groups individual to said third lamp group of only said selected panel being operated by said connected source and by said grounded other code marking conductors, and other circuits completed by said operated other combinations of said relays for illuminating a plurality of lamps in successive sets of said third lamp group to outline the successive dialled digits of said other multi-digit number.

8. In a transportation indicator system, a display panel, a group of lamps in said panel for visually displaying a time digit, a lamp relay group individual to said group of lamps, a "due" compartment lamp in said panel associated with said lamp group, a panel relay in said panel having a circuit for controlling the lighting of said "due" lamp, an "on time" compartment lamp in said panel, means for selecting said panel and for operating said panel relay to light said "due" lamp, control means responsive to the dialling of said time digit for operating certain relays in said lamp relay group, circuits connecting said lamps of said group with said lamp relay group completed by said operated certain relays for lighting a plurality of lamps in said lamp group to display said dialled time digit, said control means effective in case another digit corresponding to said "on time" lamp is dialled instead of said time digit for operating predetermined relays in said lamp relay group instead of said certain relays, and special circuits completed by the operation of said predetermined relays for restoring said panel relay to extinguish said due lamp and for illuminating said on time lamp.

9. In a transportation indicator system, a display panel, a group of lamps in said panel for visually displaying a time digit, a lamp relay group individual to said group of lamps, a due compartment lamp in said panel, a panel relay in said panel having a circuit for controlling said due lamp, means for selecting said panel and for operating said panel relay to light said due lamp, control means responsive to the dialling of said time digit for operating certain relays in said lamp relay group, circuits connecting the lamps of said group with said lamp relay group completed by said operated certain relays for lighting a plurality of the lamps in said lamp group to display said dialled time digit, special lamps in said panel for designating "on time," "delayed" and "cancelled," a different special call digit assigned to each of said special lamps, said control means effective in case one of said special call digits is dialled instead of said time digit for operating a different predetermined combination of relays in said lamp relay group corresponding to said one special dialled digit instead of operating said certain relays, special circuits completed by the operation of said different predetermined relay combinations for lighting said "on time" lamp, said "delayed" lamp, or said "cancelled" lamp dependent upon the digit dialled and the combination of relays operated, and means controlled by one of said relays in said predetermined combinations for restoring said panel relay to extinguish said due lamp.

10. In a transportation indicator system, a display panel, a set of lamps in said panel arranged so that the display of any digit requires the illumination of a plurality of the lamps therein in predetermined combinations to outline such digits, a lamp relay group individual to said set of lamps, an individual display lamp in said panel, means for selecting said panel and for lighting said individual lamp, control means responsive to the dialling of a first digit for operating certain relays in said group, circuits completed by said operated certain relays to certain of said lamps in said set for illuminating said certain lamps to outline the first said digit, special lamps in said panel each assigned a different call digit, said control means effective in case one of said different call digits is dialled instead of said first digit for operating a different combination of said relays in said group dependent upon the different call digit dialled, individual circuits for illuminating the respective special lamps completed by the respective different combinations of relays operated, and means controlled by any one of said different combinations of said relays for extinguishing said individual display lamp.

11. In a transportation indicator system, a plurality of flight display panels arranged in pairs, each pair comprising an arrival panel and a departure panel, flight groups in each panel for visually displaying digits corresponding to any flight number, arrival schedule lamp groups in each arrival panel for visually displaying digits corresponding to the scheduled arrival time of any flight, departure schedule lamp groups in each departure panel for visually displaying digits corresponding to the scheduled departure time of any flight, groups of lamp group relays individual to said flight and schedule lamp groups, sets of flight relays common to all said panels each set corresponding to a particular flight, a source of operating current, means for selecting a pair of said panels by connecting said source to the lamp group relays of only said selected pair, means responsive to dialling a multi-digit number corresponding to a particular flight for operating a corresponding set of flight relays, fixed coded circuits closed by said operated set of flight relays and completed to said source connected to said selected pair of panels for operating combinations of flight lamp group relays and combinations of schedule lamp group relays in said selected pair of panels, circuits completed by the operated combinations of flight lamp group relays in said selected arrival and departure panels for operating lamps in said flight lamp groups in said selected arrival and departure panels to display the digits of said dialled flight number, other circuits completed by the operated combinations of schedule arrival lamp group relays in

said selected arrival panel for operating lamps in said arrival schedule lamp groups to display a plurality of digits corresponding to the scheduled arrival time of said flight, and further circuits completed by the operated combinations of schedule departure lamp group relays in said selected departure panel for operating lamps in said departure schedule lamp groups to display a plurality of digits corresponding to the scheduled departure time of said flight.

12. In a transportation indicating system as claimed in claim 11 including due arrival lamp groups in said selected arrival panel for displaying digits corresponding to the due arrival time of said flight, due departure lamp groups in said selected departure panel for displaying digits corresponding to the due departure time of said flight, due arrival lamp relay groups individual to said due arrival lamp groups, due departure lamp relay groups individual to said due departure lamp groups, digit coding means responsive to dialling the digits of a multi-digit number corresponding to the due arrival time of said flight for operating combinations of said relays in said due arrival lamp relay groups, additional circuits completed by the operated combinations of said due arrival lamp group relays for operating lamps in said due arrival lamp groups to display a plurality of digits designating the due arrival time of said flight, said digit coding means responsive to dialling the digits of another multi-digit number corresponding to the due departure time of said flight for operating combinations of said relays in said due departure lamp relay groups, and more circuits completed by the operated combinations of said due departure lamp group relays for operating lamps in said due departure lamp groups to display a plurality of digits designating the due departure time of said flight.

13. In a transportation indicating system as claimed in claim 12 including checking apparatus for monitoring the display on said panels comprising a plurality of sets of indicators there being a set for each of said pairs of display panels and each set consisting of a group of flight indicators, a group of due arrival indicators and a group of due departure indicators, means for selecting the set of indicators corresponding to said selected pair of display panels at the same time said display panels are selected by connecting said source to said selected set of indicators, means responsive to the dialling of said flight number for operating the group of flight indicators in said selected set to display the numerals of said flight number, additional means responsive to the dialling of said multi-digit due arrival number for operating the group of due arrival indicators in said selected set to display the numerals of the due arrival time of said flight, and means including said additional means responsive to the dialling of said other multi-digit due departure number for operating the group of due departure indicators in said selected set to display the numerals of the due departure time of said flight.

14. In a transportation indicating system as claimed in claim 13 including interrupter circuits, and means operative after selection of said set of indicators and before dialling said flight number for connecting said source to said selected indicators to complete said interrupter circuits to automatically restore all the indicators of the selected set to their normal positions to wipe out any previous display on said set.

IMRE MOLNAR.

References Cited in the file of this patent

UNITED STATES PATENTS

Number	Name	Date
2,146,576	Haselton	Feb. 7, 1939
2,344,761	Wight et al.	Mar. 21, 1944
2,386,743	May et al.	Oct. 9, 1945
2,439,948	Preston	Apr. 20, 1948

FOREIGN PATENTS

Number	Country	Date
252,226	Great Britain	May 6, 1926