W. H. SARGENT.

WASHING MACHINE.

APPLICATION FILED FEB. 13, 1920.

1,363,275. Patented Dec. 28, 1920.

2 SHEETS—SHEET 1.

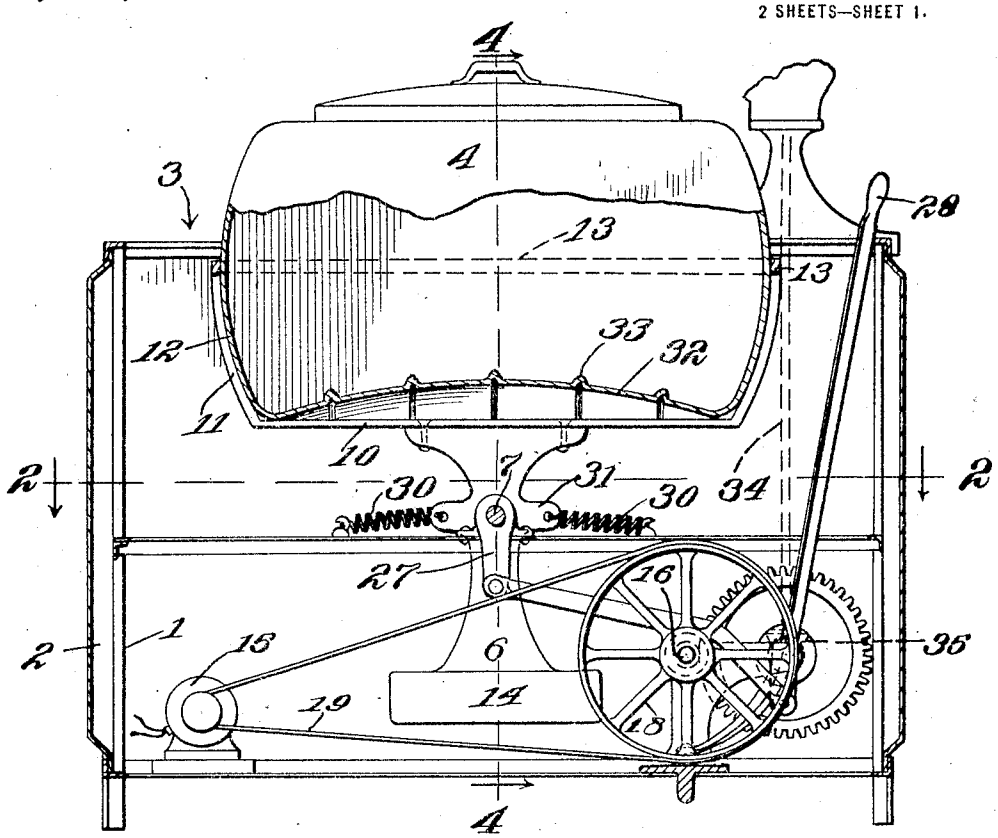

Fig. 1.

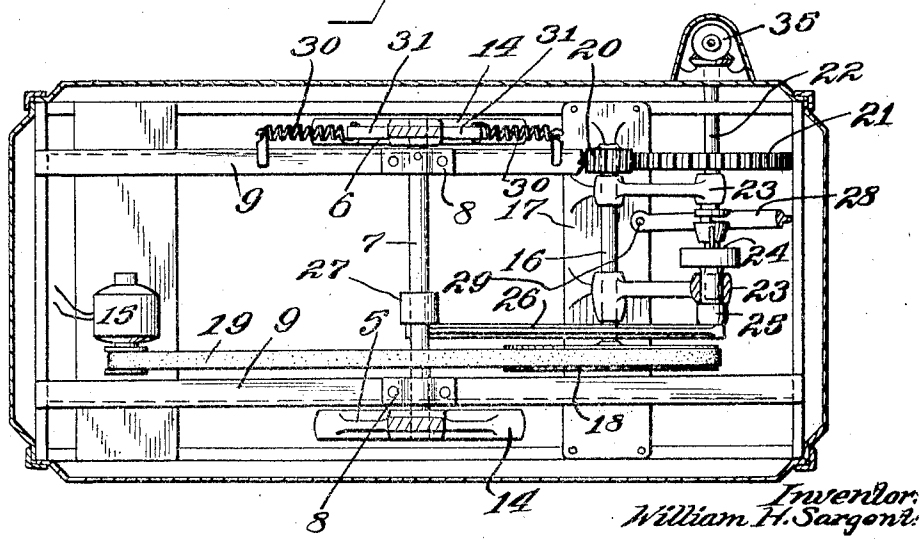

Fig. 2.

Inventor:
William H. Sargent.
by Elliott & Ammen
Attys.

W. H. SARGENT.

WASHING MACHINE.

APPLICATION FILED FEB. 13, 1920.

1,363,275.

Patented Dec. 28, 1920.

2 SHEETS—SHEET 2.

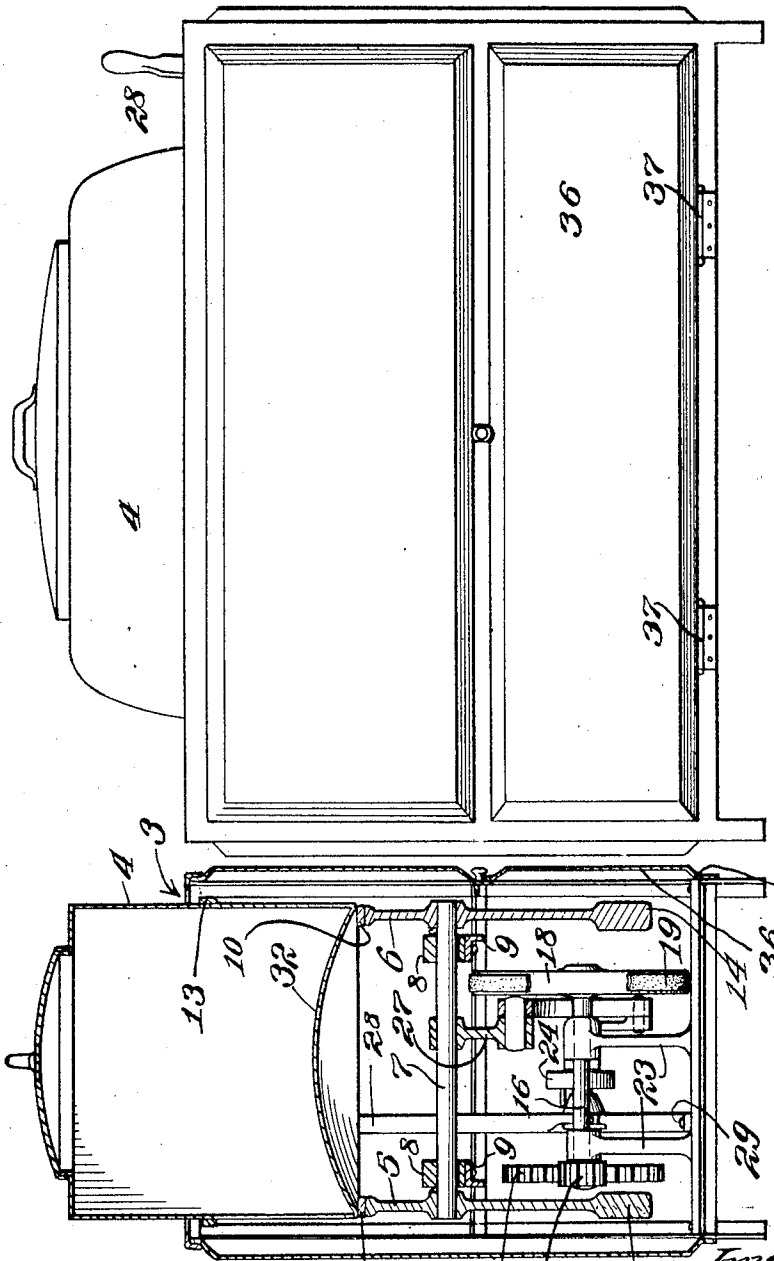

UNITED STATES PATENT OFFICE.

WILLIAM H. SARGENT, OF ST. LOUIS, MISSOURI.

WASHING-MACHINE.

1,363,275. Specification of Letters Patent. Patented Dec. 28, 1920.

Application filed February 13, 1920. Serial No. 358,352.

To all whom it may concern:

Be it known that I, WILLIAM H. SARGENT, a citizen of the United States, residing in the city of St. Louis and State of Missouri, have invented new and useful Improvements in Washing-Machines, of which the followings is a specification.

This invention relates to washing machines, and particularly to machines having a tub which is oscillated through the agency of a motor. In these machines, the tub is usually of elongated box form and is mounted and oscillated in a vertical plane extending longitudinally with its longitudinal axis. The result of this is that when the body of water within the tub impinges against the end of the tub, the whole machine becomes badly unbalanced, and unless the frame of the machine is sufficiently weighted, the entire machine will "walk" or shift its position on the floor. The general object of the present invention is to overcome this difficulty and to provide an improved construction for supporting and oscillating the tub, which will enable the tub to be given an easy oscillating movement. A further object of the invention is to provide simple means for yieldingly holding the tub in its mid-position and also to provide an improved construction for the tub, which will facilitate the washing of the clothes within the tub.

Further objects of the invention will appear hereinafter.

The invention consists in the novel features, and in the general combination of parts to be particularly described hereinafter, all of which contribute to produce a simple and efficient washing machine. A preferred embodiment of my invention will be particularly described in the following specification, while the broad scope of my invention will be pointed out in the appended claims.

In the drawing,

Figure 1 is a longitudinal section through a washing machine embodying my invention, the upper portion of the tub being shown in elevation;

Fig. 2 is a horizontal section through the machine, taken about on the line 2—2 of Fig. 1;

Fig. 3 is a side elevation of the complete machine; and

Fig. 4 is a vertical section through the machine on the line 4—4 of Fig. 1.

In carrying out my invention, I provide a frame 1 of any suitable construction which supports a case or casing 2 of side plates. This case is devoid of any cover so that it presents a large opening 3 on its upper side through which the tub 4 may be inserted. This tub is of elongated box form, the longitudinal axis of the tub coinciding with the longitudinal plane of the casing.

I provide means for supporting this tub within the case so that it can oscillate or rock; while this means may be of any suitable construction, I provide the tub with means for counterbalancing it and for absorbing the momentum of the water as it strikes the ends of the tub. In order to accomplish this, I prefer to provide a counterweight connected with the tub in such a way that when the tub is moving in one direction, the counter-weight is moving in the other direction. In order to accomplish this I provide a bracket consisting of two bracket-members 5 and 6 which are supported to rock within the casing. These bracket-members are preferably secured to a transverse rock-shaft 7 which is rotatably mounted in suitable bearings 8, (see Fig. 2), supported on the upper sides of longitudinal bars 9. The upper parts of these brackets are attached to a cradle for the tub 4, said cradle comprising two parallel bars 10 having upwardly bent ends or extensions 11 which engage the end walls 12 of the tub. These end walls 12 are preferably curved (see Fig. 1). The upper portion of the cradle is formed by a continuous strap 13 or band which passes continuously around the tub, that is to say, it extends along the sides and end walls of the tub and is connected to the upper ends of the extensions 11 (see Fig. 1); the lower portions of the bracket-members 5 and 6 are formed into counter-weights 14 (see Figs. 1 and 4).

In order to oscillate the tub, I provide a suitable motor 15. Any suitable mechanism may be provided for oscillating the tub from this motor. For example, I may provide a counter-shaft 16 supported on a suitable bracket 17 and carrying a belt pulley 18 to be driven by a belt 19 from the motor. The counter-shaft 16 carries a pinion 20 which meshes with a gear wheel 21 carried on a crank shaft 22. This crank shaft is supported on suitable arms 23 which form parts of the bracket 17. On the crank-shaft 22 a clutch 24 is provided through which a crank

arm 25 is driven when the clutch is closed. The crank arm 25 is attached to a pitman or connecting rod 26, the other end of which is attached to the lower end of a crank arm 27 which is rigidly attached to the transverse shaft 7. As indicated in Fig. 1, this connecting rod may be offset to clear the shaft 16. In order to open or close the clutch at will I provide a clutch lever 28, the lower end of which is bent toward the middle of the casing and attached by pivot 29 to the bracket 17. The upper end of this lever is formed into a handle 28 which projects through the opening 3 at the upper side of the case.

It will be evident that the counter-weights 14 will tend to keep the tub 4 in mid-position and it will also be evident that the mass of the counter-weights will tend to absorb the shock of the water in the tub as it hits the end walls, because the momentum of this water will immediately tend to elevate the counter-weights further and this will absorb the energy of the moving water.

Although by having the counter-weights slightly heavier than the tub with its contents, they will operate to hold the tub normally in mid-position; I prefer to provide resilient means tending to hold the tub in mid-position. For this purpose I attach a spring or springs at a suitable point; in the present instance I employ two coil springs 30 which are attached to horizontal arms 31 respectively, which extend in opposite directions from the axis of rotation of the bracket-member 5. The ends of these springs are attached to the adjacent bar 9. When the tub oscillates in one direction, one spring will be extended, and when it oscillates in the other direction the other spring will be extended. These springs therefore, are yielding means for holding the tub normally in mid-position and they also tend to produce an easy movement when the tub oscillates; they also offer a quickly increasing force when extended, that will prevent the tub continuing to rotate down, so as to overturn, in case the load of water and clothes, is too great for the counterweight.

In order to assist in the washing action of the water within the tub 4, I provide the tub with a bottom 32 of special construction. This bottom is preferably of concavo-convex form, the convex side being uppermost. The bottom may be formed of a sheet of metal having a convex upper face extending from a point near one end of the tub to a point near the other end, and formed with a plurality of transverse offsets or ribs 33. These ribs may be formed simply by pressing the sheet of metal into the form of ribs. It will be noted that these ribs extend at right angles to the plane in which the tub oscillates. The effect of this is that as the water passes from one end of the tub to the other, it strikes these ribs and a splashing and better washing effect results.

The end of the shaft 22 operates a vertical wringer shaft 34 through the medium of bevel gears 35.

The motor 15 may be a small electric motor provided with an electric cord which can be secured to an ordinary electric lamp socket.

In order to give access to the mechanism in the lower part of the casing, I prefer to provide one side of the casing with a door 36 attached by hinges 37, which enable the door to be swung open at will.

In the operation of the washing machine, as the tub swings on the shaft 7, the water in the tub flows with considerable velocity to the depressed end of the tub and strikes the end wall. The momentum of this water is absorbed by the counterweights 14 and the counterweights absorb this momentum without tending to raise the opposite end of the casing. The counterweights therefore, operate to prevent any tendency of the frame of the machine to "walk" or shift along the floor while in operation. It will be evident that the plunging action of the water in the tub is increased by reason of the fact that the bottom of the tub is considerably elevated above the axis on which the tub rocks. By reason of the fact that the ends of the bottom are depressed, the tub, of course, tends to stop in an extreme position with one end of the tub depressed. The springs 30 prevent this and insure the tub's stopping in its mid-position.

It is understood that the embodiment of the invention described herein is only one of the many embodiments my invention may take, and I do not wish to be limited in the practice of my invention nor in my claims, to the particular embodiment set forth.

What I claim and desire to secure by Letters Patent is:

1. In a washing machine, the combination of a supporting frame, a tub having a rocking axis on said frame, below the bottom of the tub, a counter-weight for said tub below said axis, resilient means connecting with the tub yieldingly holding the same in mid-position, and preventing the tub from overturning, and a motor for oscillating the tub and counter-weight.

2. In a washing machine, the combination of a supporting frame, a tub, a transverse rock-shaft mounted on said frame, a bracket-member on each end of said shaft extending upwardly, and supporting the tub with its bottom above the shaft, each of said bracket-members having an extension below the shaft forming a counter-weight to counter-balance the weight of the tub, an

arm attached to the shaft, a motor, and means for actuating the arm from the motor.

3. In a washing machine, the combination of a supporting frame, a tub, a transverse rock-shaft mounted on said frame, bracket-members carried by said shaft, extending upwardly and supporting said tub with its bottom above the shaft, and formed below the shaft into counter-weights respectively, to counterbalance the weight of the tub, a motor, means for rocking said shaft by said motor, and a spring attached to one of said brackets on each side thereof tending to hold the tub in its middle position, and operating to prevent overturning of the tub.

4. In a washing machine, the combination of a supporting frame, a transverse shaft mounted to rock on said frame, a tub having a concavo-convex bottom with the convex side uppermost and with the ends of the bottom depressed, brackets supporting said tub on the shaft with the bottom of the tub disposed above the shaft, a counterweight carried below the shaft and a spring attached on each side of one of the brackets to hold the tub in an upright position, and means for oscillating the tub.

5. In a washing machine, the combination of a supporting frame, a transverse shaft mounted to rock on said frame, a bracket rigidly attached to the shaft at each side of the machine, a cradle having a bar at each side attached to its corresponding bracket, a tub supported by said bars, said cradle including a band extending along the sides of the tub and across the ends thereof and connected to the ends of said bars.

6. In a washing machine, the combination of a casing having an opening on its upper side, a transverse shaft mounted in said casing, brackets carried by the shaft and extending upwardly from the shaft, a tub disposed in said opening and removably supported on the brackets with the bottom of the tub disposed above the shaft, counterweights disposed below the shaft operating to absorb the shock of the water striking the ends of the tub when oscillating, a spring attached at each side of one of the brackets to hold the tub in an upright position, and means for oscillating the tub.

In testimony whereof, I have hereunto set my hand.

WILLIAM H. SARGENT.