Aug. 7, 1945. K. A. BRAINARD 2,380,936

ELECTRICAL TERMINAL

Filed May 12, 1942 2 Sheets-Sheet 1

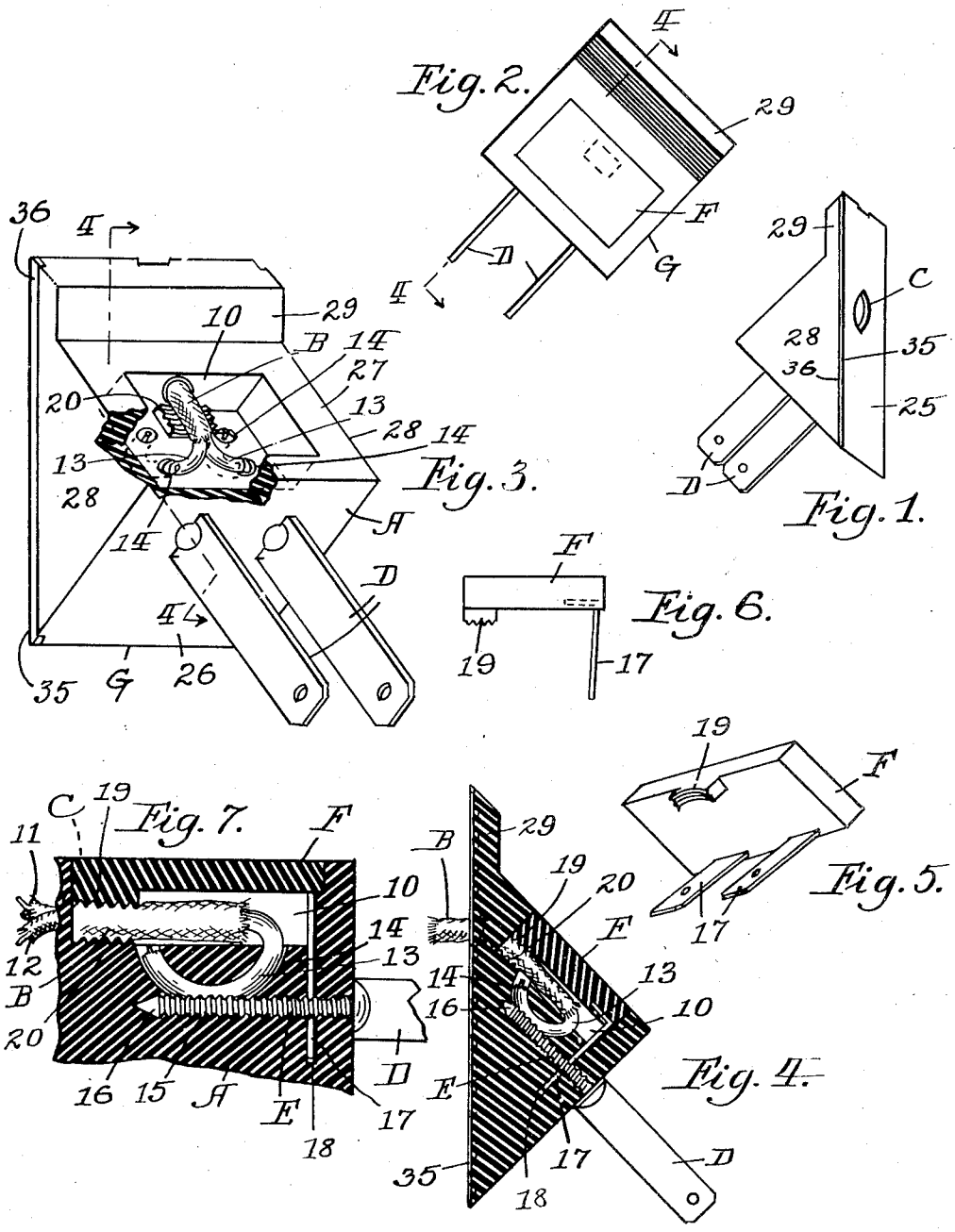

INVENTOR.
Kenneth A. Brainard
BY
F. S. Bradbury.
Attorney.

Aug. 7, 1945. K. A. BRAINARD 2,380,936

ELECTRICAL TERMINAL

Filed May 12, 1942 2 Sheets-Sheet 2

Fig. 8.

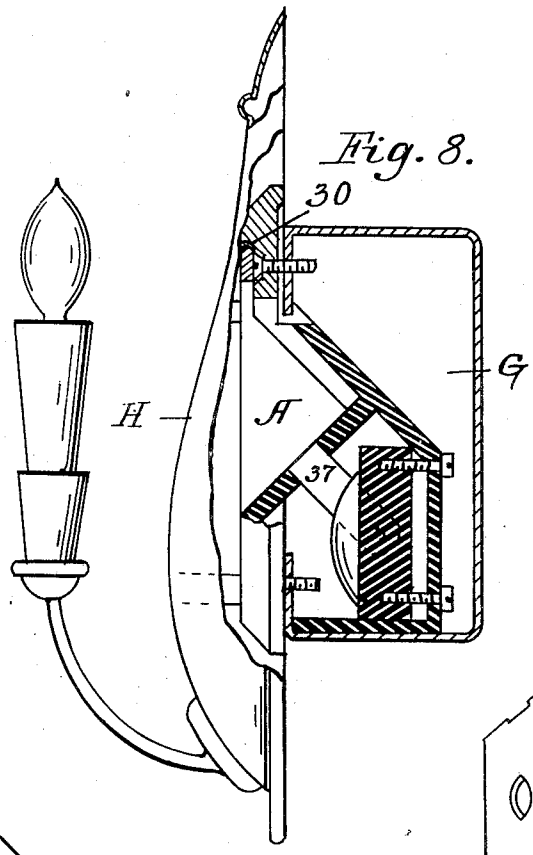

Fig. 10.

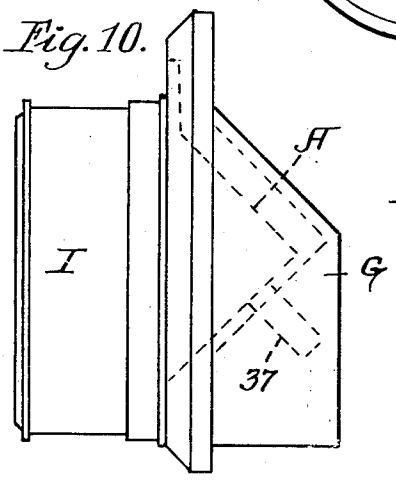

Fig. 9.

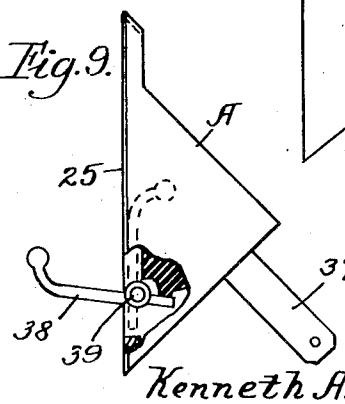

Fig. 11.

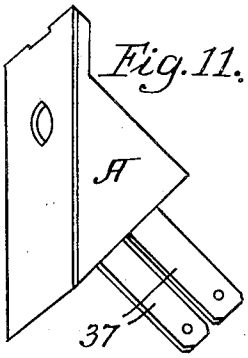

INVENTOR.
Kenneth A. Brainard,
BY
T. G. Bradbury.
Attorney.

Patented Aug. 7, 1945 2,380,936

UNITED STATES PATENT OFFICE

2,380,936

ELECTRICAL TERMINAL

Kenneth A. Brainard, Altadena, Calif.

Application May 12, 1942, Serial No. 442,697

8 Claims. (Cl. 173—361)

This invention relates to improvements in electrical connectors and particularly to that type in which the insulated conductor is fastened by simple and effective means and without the use of tools to a terminal of a circuit. More particularly this application is a continuation in part of my companion application, filed August 2, 1940, bearing Serial Number 349,715, which matured into Letters Patent No. 2,283,177, May 19, 1942, said application in turn being a continuation in part of my original application which matured into Patent Number 2,244,937, June 10, 1941. In the patent and application above referred to a portion of the novel means disclosed and which is contained in the present application relates to connecting an electrical circuit by an improved type of plug and by an improved type of connection without necessarily stripping the insulation from the conductors.

The primary object of the present invention is to provide a terminal connector for use particularly but not exclusively with a flexible insulated conductor, to effectively connect the same to a terminal piece without stripping or removing the insulation from the conductor and without the use of tools. Another object is to provide a plug of the general character disclosed in my companion application Serial Number 349,715, above identified which matured into Letters Patent No. 2,283,177, May 19, 1942, with features by which various utility objects can be attached to, suspended from and supported by or upon a wall or other support convenient for utility purposes. Further objects will be apparent from the following description.

In the accompanying drawings, forming part of this specification, Fig. 1 is a side elevation in perspective of a terminal plug to which my invention may be applied; Fig. 2 is a plan looking at the inner face of the terminal plug shown in Fig. 1; Fig. 3 is an enlarged back perspective view of the structure shown in Fig. 1, with the cover plate removed and showing the conductor cord entering the plug; Fig. 4 is a section taken on the line 4—4 of Fig. 3; Fig. 5 is a perspective view of the cover plate employed in the body of the plug; Fig. 6 is an end view of the cover plate shown in Fig. 5; Fig. 7 is a section of a detail showing the skeleton structure involved in my improvement; Fig. 8 is a side elevation partly broken away and in section illustrating the improved terminal plug shown in Figs. 1 to 7 inclusive when used for supporting a lamp fixture; Fig. 9 is a side elevation partly in section illustrating the improved terminal plug provided with a folding hook for supporting an object when the hook is turned into unfolded position as shown; Fig. 10 is a side elevation showing a clock, thermostat or other service fixture mounted upon the improved terminal plug and supported thereby, and Fig. 11 is a side perspective view of the terminal plug without any of the fixtures shown in Figs. 8 to 11 inclusive applied thereto.

Referring particularly to Fig. 7, A indicates an insulated body which may be part of any type of electrical connector desired into which the double electrical conductor cord B is inserted through the passage C into the chamber 10. The insulated conductors 11 and 12 of the cord are divided or split and the end, such as 13, of each conductor while remaining insulated is looped rearwardly through a reverse or circuitous passageway such as 14. The reverse passageway as shown is in the form of an arc penetrating the floor of the chamber 10 at both ends and receiving the reverse loop 13 of the conductor. D indicates a rigid terminal for connection with a socket of any type or companion connecting element. The rigid terminal as shown consists of a blade having a contact screw E which is threaded into a passage 15 which intersects the loop passage 14 longitudinally so that the thread of the screw, when the latter is screwed into the body will cut through the insulation of the conductor and make electrical contact connection for a considerable distance longitudinally along the conductor. In this manner a comparatively large surface area is contacted which assures a good and lasting electrical connection and a strong and substantial fastening or gripping means. The convolutions of the thread of the screw bite through the insulation and impinge the conductor tightly engaged with the body of the connector to prevent removal. The inner end of the screw is pointed at 16 to pierce the insulation of the conductor loop as the screw is applied so that convolutions of the thread following will make a clean positive electrical contact.

The body A is shown provided with a cover plate F inserted in and closing the chamber 10 and provided with spring arms such as 17 which enter appropriate slots such as 18. Each of these arms is placed so that the screw E will penetrate and pinion an arm and assist in holding the cover F closed while simultaneously making contact with the terminal conductor branch such as 13. The arms 17 are slightly inclined inwardly as shown in Fig. 6 and are resilient so that the resulting pinion action assists in holding the cover closed by spring pressure. Serrated surfaces 19

and 28 respectively on the cover and body cooperate in biting the main conductor cord and retaining the cord tightly attached to the body to relieve strain on the loops 13. It is to be understood that in connecting the two conductors contained in the cord to a plug such as shown in Figs. 1 to 6 inclusive, a pair of circuit contact terminal blades D is employed, one terminal blade being provided for each conductor and that a companion pair of loops and cooperating reverse loop passages are provided.

The plug terminal shown is of the type disclosed in my companion application which matured into Letters Patent No. 2,283,177, May 19, 1942, of which the present application is a continuation in part and has a wedge shaped body G defined by a substantially flat base or face plate 25, a pair of converging opposite sides 26 and 27 extending from the base, and a pair of parallel opposite ends 28 adjacent to said base and sides. Extending normally from one of the sides 26, that is obliquely from the plug is a pair of electrical contact blades D, and extending from the opposite side 27 in the plane of the base or face of the body is a lip 29, the outer face of which is an extension of the face of the body. This lip is used to engage a spring catch 30 (see Fig. 8) for removably securing the body in a suitable receptacle.

The principles and structure are susceptible of various modifications involving the anchoring of the conductor irrespective of direction by a reverse loop and of engaging the loop by the side or other portion of a contact terminal screw or other form of connection. The principles involved also include clamping the cord on the body to relieve strain on the loop or loops of the conductors. The invention also includes any desired means for simultaneously making electrical contact without the use of tools, and by the same means pinioning parts of the structure to combine and hold an assemblage of elements together. Thus electrical contact member D acts as an assembly holder as well as anchoring the electrical conductor in the body and making electrical contact therewith. It will be noted that substantially every part of the mechanism is enclosed and protected within the connector body, no electrical conductor parts or metal assembly parts which are employed being exposed, which is a distinct advantage. The combined electrical contact and assembly holder may be screw driven or modified and driven, clamped or otherwise constructed for making contact with and holding the conductor as well as mechanically locking any of the parts of the assembly together. Also the mode of contacting the electrical conductor such as 12 by the electric contact member D may be from any direction, in any manner and by any suitable means, within the spirit of the invention. The assemblage of parts constituting my improvement is light in weight and the body is easily removed from a cooperating receptacle.

The exposed base of the body or plug as disclosed in my companion application Serial Number 349,715, which matured into Letters Patent No. 2,283,177, May 19, 1942, can when desired be provided with a thin separable surface plate 35, (see Figs. 3 and 4) colored as desired or styled to harmonize with the finish of a room in which the body is used, said surface plate being held along its sides and ends by clips 36, bent or swaged over the body of the device.

In Figs. 8 to 11 inclusive, I have shown a modification of my improved electrical connector for use in a wall receptacle in which the connector body A shown in Fig. 11, is inserted in the receptacle G, the electrical contact blades 37 and the spring catch 30 being employed to hold the body fully inserted. In Fig. 8 a lamp fixture H is mounted on the connector body, said fixture being supported flush with the face plate and its weight tending to hold the connector body tightly inserted through the resultant force applied by the downward slant of the contact blades engaged in the receptacle. In a similar manner the utility article represented by the thermostat or clock I, shown in Fig. 10 or any other article desired can be mounted on the connector body so as to be supported on the wall of a building structure. In Fig. 9 I have shown my improved connector body A constructed with a folding supporting hook 38, hinged at 39, and recessed when folded into the base 25 of the body. The weight of any object hung on the hook 38 in a similar manner as described above tends to hold the body seated in its wall receptacle G.

In accordance with the patent statutes, I have described the principles of operation of my invention together with the structure which I now consider to represent the best embodiment thereof but I desire to have it understood that the construction shown is only illustrative and that the invention can be carried out by other means and applied to other uses than those above set forth within the spirit of the invention and within the scope of the following claims.

I claim:

1. An electrical connector having a body, said body having a circuitous duct therein adapted to receive and hold an insulated electrical conductor, and a connector element having a screw threaded shank inserted in said body longitudinally of and entering the side of said passage with its thread convolutions perforating the insulation of said conductor and contacting said conductor to make electrical connection therewith and retain the conductor in said passage.

2. An electrical connector having a body, said body having a longitudinal duct therein adapted to receive and hold an insulated conductor, a connector element having a pointed screw shank inserted point first through said body and entering the side of said duct with its thread convolutions penetrating the insulation of said conductor and contacting said conductor to make electrical connection therewith and retain said conductor in said duct, and means for clamping the conductor on said body to prevent pulling strain upon the contact between the shank and the conductor.

3. An electrical connector having a body, said body having a chamber in its side, a circuitous duct connected with the floor of said chamber and an inlet for admitting an electrical conductor into said chamber and duct, a connector element on said body having a screw threaded shank inserted in said body longitudinally of and entering the side of said duct with its thread convolutions engaging said conductor, a cover for said chamber having a fastening element inserted in said body and penetrated by said shank to hold the cover closed over said chamber, said cover having means for engaging the body of said conductor to relieve pulling strain upon the contact between the shank and the conductor.

4. An electrical connector having a body, a connecting terminal mounted upon said body, said body having an inlet for admitting an insulated electrical conductor and a duct through

which said conductor is threaded, and a screw element projecting inwardly from said connecting terminal and threaded longitudinally along one side of said duct with its thread penetrating the insulation and engaging the conductor therein.

5. An electrical connector, comprising, a body having a duct therein for admitting and holding an insulated conductor, and a threaded electrical terminal seated in said body with only its thread perforating the insulation along the side of said conductor in said duct and making electrical contact with the conductor through its insulation.

6. An electrical connector, comprising, a body having a longitudinal duct therein adapted to receive and hold an insulated conductor, and a terminal element having a screw shank inserted through said body and entering the side of said duct longitudinally thereof with its thread penetrating the insulation of said conductor and contacting said conductor within the insulation to make electrical connection therewith and retain the conductor in said duct.

7. An electrical connector, comprising, a body having a longitudinal duct therein adapted to receive and hold an insulated conductor, a terminal having a screw shank inserted through said body and entering the side of said duct longitudinally thereof with its thread penetrating the insulation of said conductor and contacting said conductor to make electrical connection therewith and retain the conductor in said duct, and means for clamping the conductor on said body to prevent pulling strain upon the contact between the shank and the conductor.

8. An electrical connector, comprising, a body having a chamber therein, a duct in said body connected with said chamber, an inlet for admitting an insulated electrical conductor into said chamber and duct, a connector on said body having a screw threaded shank inserted in said body along one side of said duct with its thread convolutions engaging said conductor, and a cover for said chamber having fastening means inserted in said body and penetrated by said shank to hold the cover closed over said chamber, said cover having means for engaging the body of said conductor to relieve pulling strain upon the contact between the shank and the conductor.

KENNETH A. BRAINARD.