Dec. 13, 1927. 1,652,463

O. TYBERG

TYPEWRITER

Filed Jan. 26, 1925 2 Sheets-Sheet 1

Fig. 1.

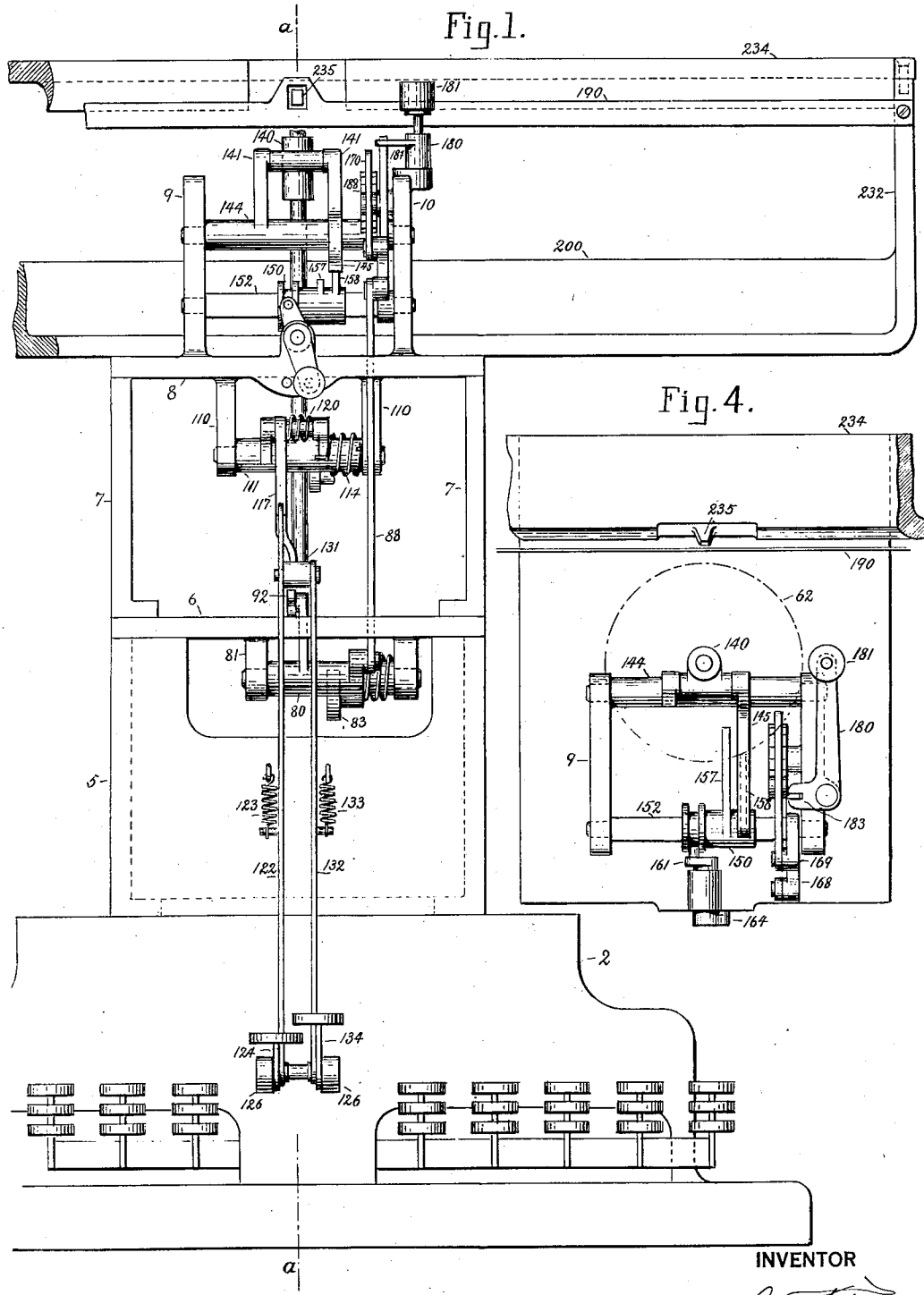

Fig. 4.

INVENTOR

Olof Tyberg

Dec. 13, 1927. 1,652,463

O. TYBERG

TYPEWRITER

Filed Jan. 26, 1925 2 Sheets-Sheet 2

Fig. 2

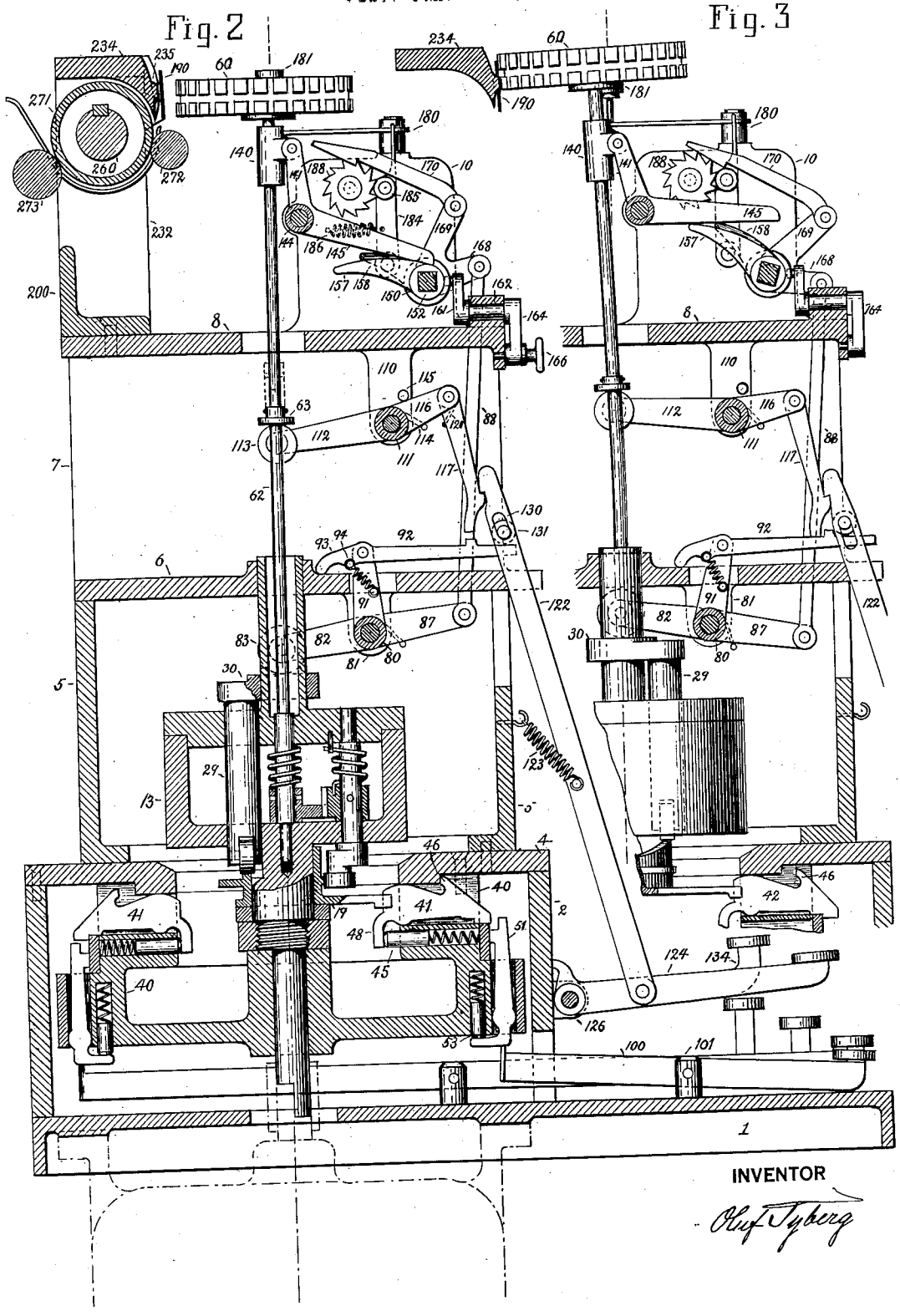

Fig. 3

INVENTOR

Olof Tyberg

Patented Dec. 13, 1927. 1,652,463

UNITED STATES PATENT OFFICE.

OLUF TYBERG, OF POINT LOMA, CALIFORNIA.

TYPEWRITER.

Application filed January 26, 1925. Serial No. 4,933.

This invention relates to power typewriters, and especially to the class of machines which employ a revolving type-carrier. One object of this invention is to provide suitable adjustments for altering the force of the printing impact; another object is to provide some new and convenient facilities connected with the shift mechanism. Other objects are to provide suitable means for direct inking, and for a simple and efficient impression shield.

The invention accordingly consists in the features of construction, combinations of elements and arrangement of parts exemplified in the accompanying drawings. The machine shown embodies the typewriter movement disclosed in my earlier application, filed May 29, 1922, Ser. No. 544,644, where a normally revolving typewheel is subjected to two corresponding motions in opposite directions at the same time, for the purpose of taking impression therefrom.

The corresponding parts in the two applications are indicated by similar reference letters.

In the accompanying drawings, consisting of two sheets, Fig. 1 is a partial front view of the typewriter embodying my invention. Fig. 2 is a side elevation of the same, (center-section on the lines *a*—*a* of Fig. 1) showing the working parts in their normal position. Fig. 3 is a partial view of the same, showing the working parts in active operation. Fig. 4 is a top view of the printing and inking mechanism.

The portion of the frame below plate 6 is indentical in both applications, except for such slight modifications as will be referred to hereinafter. On the top of plate 6 are fastened two side-brackets 7, which support the plate 8. On the front portion of the plate 8 are mounted two uprights 9 and 10, and upon its rear portion is mounted the carriage-frame 200. This frame extends the full length of the carriage travel, and is provided at each end with uprights 231 and 232. Only one of these uprights is shown. These two uprights support a top-bar 234, upon the front side of which is situated the impression block 235, against which the printing is to be done. The printing against a stationary impression block, instead of upon a rotary platen, mounted in a movable carriage, introduces a number of distinct advantages. It not only makes it easier to establish and maintain a proper printing contact, but it also eliminates wear and reduces noise. It also makes possible the introduction of a properly constructed impression shield, as well as the use of a much smaller typewheel, for it allows the letters on such a wheel to be placed much closer together. All of these features tend to increase the accuracy of alignment and the efficiency of the machine. The paper carriage is mounted on a rod 260, supported in the two uprights 231 and 232. The construction of the carriage, which includes a main feed-roller 271 and two pressure-rollers 272 and 273, is only indicated in Fig. 2, as its detailed construction and the manner of controlling its movements do not form part of the subject matter of this invention.

The rotary carrier 13 and the mechanism belonging thereto are identical to that shown in my earlier application. Only the typewheel-shaft 62 has been reduced in size and increased in length, in order to permit a certain amount of flexibility; for instead of making a hammer strike the typewheel, as in my earlier application, I propose to make the typewheel strike a stationary platen.

The pawl case 40, fastened to the bottom of plate 4 is similar to that shown in my earlier application. Only the stop-pawl 41 has been slightly modified, by changing the pull-spring 45 in the earlier application to a spring-plunger 45. This spring-plunger pushes against a lip 48 on the inner side of the stop pawl. Also the downward projection 46 in the earlier application, which acted as a limit stop to the released pawl, has been substituted by a projection 46 on the upper side of the stop pawl, and is so situated as to limit its free motion by striking a shoulder 49, situated on the lower side of plate 4.

A rockshaft 80 is mounted between the lugs 81 on the underside of plate 6. This rockshaft has one arm 82 on which is mounted a roller 83, resting on the cap 30 of plunger 29 in the rotary carrier, and from which it receives its motion, as explained in my earlier application. A spiral spring 86 keeps this rockshaft normally in position. Another arm 87 of this rockshaft connects by rod 88 to the printing mechanism, to be referred to hereinafter. A third arm 91 carries a pawl 92, whose rear end 93 is made to rest normally against the top of plate 6 by the spring 94. The pawl 92 connects with the shift mechanism.

As the shift mechanism is most frequently used for writing one single capital letter at a time, I have introduced some new and useful features with the view of saving time in restoring the shift mechanism to its normal position. Besides the usual shift key which keeps the types in their shifted position as long as this key is depressed, I add another self-releasing shift key, which allows the shift mechanism to be automatically released from this key immediately after one shift letter has been printed, and while this key is still depressed. This I accomplish by means of a release motion operated by the mechanism that controls the printing and will now be explained.

The automatic shift key mechanism may be constructed in any suitable manner, and in my preferred construction is as follows. Supported in lugs 110, situated on the underside of plate 8, is a rockshaft 111, whose arm 112 carries a roller 113, made to bear against the lower side of flange 63 on the typewheel shaft 62. A spiral spring 114 is wound on the rockshaft 111, and keeps it in its normal position against the stop pin 115. Another arm 116 of this rockshaft carries a pawl 117. A spiral spring 120 keeps the hook of this pawl gripping a hooked flat rod 122. Rod 122 is pivoted at its lower end to the automatically released shift key 124, which together with the permanent shift key 134, is mounted between lugs 126, situated on the front part of the casing 2. Whenever the self-releasing shift key 124 is depressed, the hooked rod 122, through the pawl 117 and its rockshaft 111, raises the typewheel to its shifted position, but at the same time the lower end of pawl 117 is pushed down against the pawl 92. As shown in Fig. 1, the lower end of pawl 117 has been slightly bent in order to line up with the pawl 92. Now when one of the printing keys has been struck, the action, as has been explained in my earlier application, causes the motion of the rockshaft 80 to push the hook of pawl 92 in behind the end of pawl 117. This position is shown in Fig. 3. As soon as the rockshaft 80 returns to its normal position, immediately after the printing action (to be explained hereinafter) has been completed, the pawl 92 pulls the pawl 117 away from the hooked rod 122, and permits the typewheel shaft to return to its normal position while the key 124 is still depressed.

The permanent shift mechanism, which may be constructed in any suitable manner, is as follows. In the hooked flat rod 122 is a slot 130, in the bottom of which is located a pin, which is part of a shoulder stud 131. This shoulder stud is fastened at the top of another flat rod 132, which lower end is pivoted to the permanent shift key 134. When this key is depressed it operates the shift mechanism as before, through the pin in the slot 130, but as the pawl 92 extends out directly under the shoulder stud 131, the depression of the permanent key causes the pawl 92 to be pushed down and out of contact with pawl 117, and hence makes its release action inoperative. The two rods 122 and 132 are each independently held in their normal position by the two springs 123 and 133, so that when the automatic shift key is depressed, the permanent shift key is not affected, because of the freedom of the pin in the slot 130.

The typewheel 60 is mounted on the typewheel shaft 62. This shaft has been sufficiently reduced in size to allow for a certain amount of flexibility to permit the typewheel to be forced against the platen, and practical tests have shown that the use of such a solid, flexible shaft offers distinct advantages over constructions of similar nature, but which employ universal joints.

The printing mechanism constitutes the means for controlling the striking movement of the typewheel 1 against the platen. These means may be constructed in any suitable manner, and in my preferred construction are as follows. The upper end of the typewheel shaft 62, directly below the typewheel, is supported in a bearing 140, hinged between the two uprights 9 and 10, already referred to. Another arm 145 on this rockshaft extends rearward and rests normally on a sleeve 150. This sleeve is slidingly mounted on a square rockshaft 152, also pivoted in and between the two uprights 9 and 10. The sleeve 150 is provided with two differently shaped wings or arms 157 and 158, and has also a groove, by means of which its position is controlled through a pin fastened in an arm 161. This arm is secured to a shaft 162, mounted in a bearing on the top of plate 8. To the other end of shaft 162 is attached an arm 164, provided with a loose pin 166. By turning this arm 164 so that the loose pin 166 may be inserted and held in either one of two corresponding holes drilled in the edge of plate 8, the sleeve 150 may be held so that either one of its

two wings will be directly under and in line with the arm 145. As the wings 157 and 158 are shaped differently, they will produce different speeds to the motion of the type-wheel as it strikes the platen. Fastened to the square rockshaft itself are two arms, of which the arm 168 is connected by rod 88 to rockshaft 80, by which it is operated. To the other arm 169 is attached a pawl 170, which operates the inking mechanism now to be described. It should be understood that I do not wish to limit myself to a sleeve with only two arms, as requirements might make a larger number of adjustments desirable. The construction discloses a practical way of meeting a particular condition, for it should be understood that as the amount of motion to be given to the typewheel must always be the same, the different motions must all be of a nature that permit of a slow start with a gradually increasing speed. It should also be understood that for practical purposes of assembling it may be advisable to divide the typewheel shaft into two parts, for instance by holding the two parts solidly together in an extension of the collar shown attached to the flange 63. This has been indicated by dotted lines in Fig. 2.

The inking mechanism may be constructed in any suitable way. In my preferred construction I employ an inking mechanism for inking the typewheel directly each time an impression is taken therefrom. This mechanism includes an ink-roller operated through a ratchet wheel motion in the following manner. On the top of upright 10 is movably mounted a bell-crank 180. (See Figs. 1 and 4. In Fig. 4 the typewheel is indicated only by broken lines.) To the one arm of this bell-crank is attached the ink-roller 181, normally out of contact with the typewheel, while in the other arm there is cut a slot 183, in which is working the reduced upper end of an arm 184. This arm is pivoted on the inner side of upright 10, directly below the bell-crank 180. (Fig. 2.) On the arm 184 is a roller 185, which by means of a pull spring 186 is made to rest normally between the teeth of a ratchet wheel 188, also mounted on the upright 10. Normally resting on the top of the ratchet wheel 188 is the pawl 170, already referred to. This pawl is so shaped that when it is pulled back by the motion of rockshaft 152, it feeds the ratchet wheel one tooth at a time as shown in Fig. 3, and when so doing lifts the roller 185 over into the next tooth. This moves the arm 184 and, by its connection with the bell crank 180, forces the ink roller against the typewheel. In order to make this contact of the ink roller of a yielding nature, the upper portion of the arm 184 has been reduced in width to a state of flexibility. It should be understood that this motion is so adjusted, that the particular letter to be printed is inked when the ink roller contacts the typewheel.

The impression shield may be constructed in any suitable manner. I prefer to combine such a shield with an alignment strip running the full length of the carriage travel. This alignment strip 190 consists of a flexible band, the two ends of which are respectively fastened to the front of the two end uprights 231 and 232 of the carriage frame, and so situated that its upper edge is in line with the bottom of the printing, while its lower edge meets the paper as it comes from the feed rollers, and guides it in between the alignment strip and the front face of the top-bar 234. Directly opposite the impression block 235, the alignment strip has been widened out, and an opening provided directly opposite the impression block. When the printing takes place, the flexible strip is forced against the paper by the typewheel, and only the particular letter to be printed is permitted to come in contact with the paper.

Having thus fully described my invention, what I claim as new and useful is:—

1. The combination of a printing mechanism, means for operating the same, a case-shift mechanism, a shift-key, releasable connections normally connecting said shift-key to said shift mechanism, and means for releasing said shift mechanism from said shift-key immediately after a single shift-letter has been printed and while said shift-key is still depressed.

2. The combination of a printing mechanism operated by a key-controlled power-driven actuator, a case-shift mechanism, a shift-key, releasable connections normally connecting said shift-key to said shift mechanism, and means operated by said actuator for releasing said shift mechanism from said shift-key immediately after a single shift-letter has been printed and while said shift-key is still depressed.

3. The combination of a platen, a typewheel, a key-controlled power-driven actuating mechanism for producing contact between said platen and any selected type on said typewheel, a case-shift mechanism, a shift-key, releasable connections normally connecting said shift-key to said shift mechanism, and means operated by said actuating mechanism for releasing said shift mechanism from said shift-key immediately after a single shift-letter has been printed and while said shift-key is still depressed.

4. The combination of a printing mechanism, means for operating the same, a case-shift mechanism, a permanent shift-key that operates said shift mechanism continuously while depressed, a releasable shift-key normally connected to said shift mechanism, and means for disconnecting said releasable shift key from said shift mechanism

immediately after a single shift letter has been printed and while said shift key is still depressed.

5. The combination of a continuously rotated driver, a key-controlled printing mechanism operated by said driver, a case-shift mechanism, a releasable shift-key normally connected to said shift mechanism, and means operated by said driver for disconnecting said releasable shift key from said shift mechanism immediately after a single shift letter has been printed and while said shift key is still depressed.

6. The combination of a platen, a typewheel mounted on a continuously rotated driver, a key-controlled actuating mechanism operated by said driver for bringing any selected type in contact with said platen, a case-shift mechanism, a permanent shift-key that operates said shift mechanism continuously while depressed, a releasable shift-key normally connected to said shift mechanism, and means operated by said actuating mechanism for releasing said shift mechanism from said releasable shift-key immediately after a single shift-letter has been printed and while said shift-key is still depressed.

7. The combination of a platen, a typewheel secured to a solid flexible shaft, said shaft mounted in cylindrical bearings, a type selecting device, and means for bending said flexible shaft and for bringing any selected type on said typewheel in contact with said platen.

8. The combination of a platen, a typewheel secured to a solid flexible shaft, a keyboard controlled type selecting device, and means for bending said flexible shaft and bringing any selected type on said typewheel in contact with said platen.

9. The combination of a platen, a continuously rotated driver, a typewheel secured to a solid flexible shaft and mounted on said driver, a type selecting device, and means for bending said flexible shaft and for bringing any selected type on said typewheel in contact with said platen.

10. The combination of a printing mechanism, key-controlled power-driven means for operating the same, and said means comprising an adjustable device with shiftable arms of different shapes for altering the force of the printing impact.

11. The combination of a continuously rotated driver, a printing mechanism, a key-controlled rockshaft for operating said printing mechanism and operated by said driver, and an adjustable device slidingly mounted on said rockshaft for altering the force of the printing impact.

12. The combination of a printing mechanism, a key-controlled rockshaft for operating said printing mechanism, a sleeve provided with differently shaped arms adjustably mounted on said rockshaft for the purpose of altering the force of the printing impact.

13. The combination of a platen, a continuously rotated driver, a typewheel, a printing mechanism for producing contact between said typewheel, and said platen, a key-controlled rockshaft for operating said printing mechanism and operated by said driver, and an adjustable sleeve slidingly mounted on said rockshaft and provided with means for altering the force of the printing impact.

14. The combination of a platen, a continuously rotated driver, a typewheel, a printing mechanism for producing contact between said typewheel and said platen, a key-controlled rockshaft for operating said printing mechanism and operated by said driver, a sleeve provided with differently shaped arms slidingly mounted on said rockshaft, and a separate device for adjusting the position of said sleeve on said rockshaft for the purpose of altering the force of the printing contact.

15. The combination of a platen, a continuously rotated typewheel, key-controlled power-driven means for making said typewheel produce a printing impact against said platen, and said means comprising an adjustable device with shiftable arms of different shapes for altering the force of the printing impact.

16. The combination of a platen, a typewheel mounted on a flexible shaft, key-controlled power-driven means for producing contact between said platen and said typewheel, and an adjustable device for altering the force of said contact.

17. The combination of a platen, a continuously rotated typewheel, key-controlled power-driven means for bringing any selected type in printing contact with said platen, an ink-roller normally out of contact with said typewheel, and an inking mechanism operated by said means for throwing said ink-roller into contact with said selected type before said type reaches the printing position.

18. The combination of a platen, a typewheel, key-controlled power-driven means for bringing any selected type in printing contact with said platen, an ink-roller normally out of contact with said typewheel, and an inking mechanism including a ratchet-wheel motion for throwing said ink-roller into contact with said selected type before said type reaches the printing position.

19. The combination of a stationary impression block, a continuously rotated typewheel, an impression shield interposed between said platen and said typewheel, a key-controlled power-driven mechanism for bringing any selected type in contact with

said impression block, an ink-roller normally out of contact with said typewheel, and mechanism for bringing said ink-roller into contact with any type on said typewheel selected for printing.

20. The combination of a carriage slidingly mounted in a frame extending beyond the carriage travel, a platen mounted in said frame, a typewheel and means for making said typewheel strike said platen, and an alignment strip fastened to the ends of said frame and provided with suitable means for acting as an impression-shield when said typewheel strikes said platen.

Signed by me at Point Loma, California, this 13th day of January, 1925.

OLUF TYBERG.