Jan. 24, 1961 W. J. ROGERS 2,969,237

ROLL-BALL DEVICE

Filed Oct. 5, 1959

Fig. 1

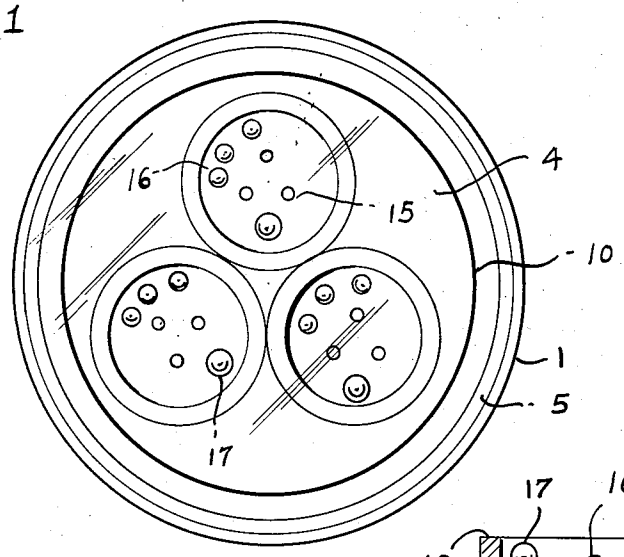

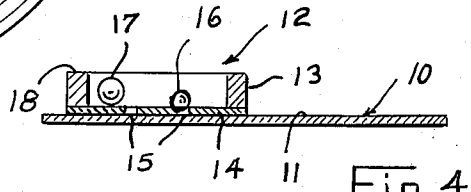

Fig. 4

Fig. 2

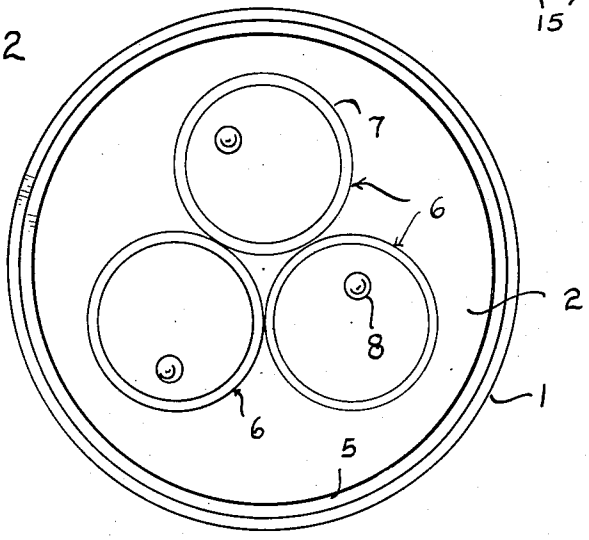

Fig. 3

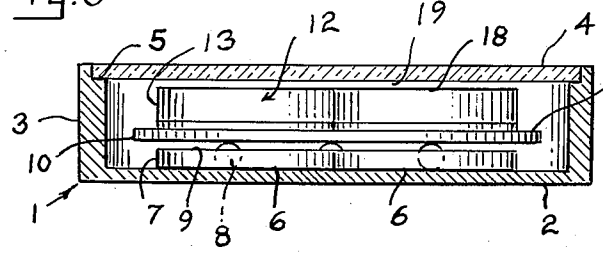

INVENTOR.
WILLIAM J. ROGERS
BY Nicholas J. Garofalo
his Attorney

United States Patent Office

2,969,237

Patented Jan. 24, 1961

2,969,237

ROLL-BALL DEVICE

William J. Rogers, 53—15 66th St., Maspeth 78, N.Y.

Filed Oct. 5, 1959, Ser. No. 844,398

4 Claims. (Cl. 273—113)

This invention relates to an improved roll-ball device, the general object of which is to provide to the user thereof not only a source of amusement, but also a means for testing his skill, manual control, and patience.

In accordance with the invention a device is provided containing a plurality of small balls visible through a transparent covering to the user, and further containing a field of shallow pockets into or out of which the balls are adapted to roll accordingly as the device is actuated. The object of the user of the device is to cause all of the balls to become finally settled in the several pockets.

A feature of the invention is a member which is unstable in its support so as to readily shift about as the device is actuated, in which the shallow pockets are formed, and upon which the balls are designed to freely roll. This feature makes it materially more difficult to finally settle the several balls in the pockets; it makes an increased demand upon the skill, manual control, and patience of the user; and adds considerably to the amusement and personal satisfaction of the user in accomplishing the feat of finally settling all the balls in the pockets.

Another feature of the invention is provided by larger and heavier balls mixed with the smaller balls, which knock about, displace, and cause confusion of the small balls whereby the difficulty of finally settling the small balls in the shallow pockets is further increased.

A still further feature of the invention is an arrangement of separate wells upon the surface of the shiftable member, each having in its bottom surface a group of shallow pockets, a corresponding number of small balls, and at least one of the heavier balls. This feature further adds to the interest, amusement, and patience of the user in attempting to finally settle the balls in the pockets of the several wells.

The invention further lies in the particular construction of the device, in the advantageous arrangement of the components thereof, and in their cooperative association with one another to effect the results intended herein.

The foregoing and other features, objects, and advantages of the invention will appear more fully herein from a consideration of the detailed description which follows, taken together with the accompanying drawings wherein an embodiment of the invention is illustrated. It is to be expressly understood, however, that the drawings are for purposes of illustration and description and are not to be construed as defining the limits of the invention.

In the drawings:

Fig. 1 is a top plan view of a device embodying the invention;

Fig. 2 is a top plan view of the container portion of the device with the shiftable member and the glass covering removed;

Fig. 3 is a cross section through the container so as to provide a view in elevation of the interior elements of the container; and

Fig. 4 is a detail of one of the wells of the shiftable member in section.

For a more detailed understanding of the invention reference is now directed to the several drawings, wherein there is shown a cylindrical container **1** having a base or bottom wall **2** and a cylindrical side wall **3** unitary with the base. The container has an open top end which is closed over by a transparent member or glass **4**. The latter rests at its marginal area upon an annular shoulder **5** formed internally of the upper end of the side wall **3**. The glass is made fast to the shoulder by glue or other suitable means.

Upon the inner face of the base **2** of the container are three wells **6** defined by cylindrical walls or rings **7**, each fixed to the base **2** and open at its top end. The rings are arranged in triangular array, the center of which is the center of the base **2**. In each well **6** is a ball **8**, preferably a steel bearing ball, which is free to roll about the confines of the well. The diameter of the ball **8** is a little greater than the vertical height of the wall of the well so as to project a little above the annular rim **9** of the latter, as best seen in Fig. 3.

Bearing upon the projecting peripheral surfaces of the three balls **8** is the flat undersurface of a rigid disc plate **10**. The disc plate is adapted to ride or shift over the balls in a plane parallel to the base **2** of the container accordingly as the balls are caused to roll about in their respective wells; and it is limited in the extent of this shifting in any particular direction by the interior of the side wall **3** of the container. Accordingly, a floating, unstable, or shiftable member is defined by the disc plate relative to the free rolling balls.

Upon the flat upper surface **11** of the disc plate or shiftable member **10** are three cylindrical wells **12**, each having a cylindrical side wall **13** and a flat base **14** integral therewith. The wells **12** are mounted fast to the surface of the disc plate by means of their bases **14** which are adhered, as by glue or other suitable means, to the disc plate. It is to be appreciated that the disc plate and the several wells thereon may be one integral member formed as by moulding from plastic or other stiff material. The wells **12** are arranged in triangular array upon the disc plate, the center of which is also the center of the disc plate.

In the base of each well **12** is a group of three small cylindrical holes **15** which serve as seats for small balls **16**. The holes or seats **15** are relatively shallow, and the diameter of the balls **16** is greater than that of the holes, whereby only a small portion of the peripheral surface of a ball **16** is adapted to seat in the hole, as appears in Fig. 4 wherein one of the balls **16** is shown seated in a hole **15**. Each ball **16** is adapted to be seated or settled in a hole or pocket **15**, and is subject to displacement therefrom upon slight tilting or jarring of the container **1** or the disc plate **10**. The pockets **15** are adequately spaced from one another so that the balls will not touch one another when seated.

Freely rollable upon the base **14** of each well **12** is a heavier ball **17** which is also larger in diameter than the balls **16**. This is a bearing ball which is the same as the balls **8**. The function of this heavier and larger ball **17** is to knock about and displace the small balls **16** from their seats, so as to make it difficult to finally settle the small balls in their seats.

The vertical height of each well **12** is such that the rims **18** thereof extend a little above the several balls confined in each well. The glass **4** is disposed in a plane slightly above and clear of the rims of the wells **12**, so that the disc plate **10** is free to shift about from side to side in the container upon the bearing balls **8**. The extent of the space **19** between the glass **4** and the rims

18 of the wells 12 is less than the diameters of the small balls 16. This is desirable as it permits the container 1 to be turned over and about without any possibility of the small balls 16 escaping from the confines of their wells.

Further, the outer diameter of the disc plate 10 is greater than the diameter of an imaginary circle circumscribed about the outer peripheral points of the three base rings 7; and the distance that the disc plate 10 can shift in any direction to abut the inner face of the side wall 3 of the container is such that the rings 7 and the balls 8 therein always remain covered by the disc plate. Accordingly, when the container is turned over and about neither the balls 8, the balls 17, nor the balls 16 are able to escape from the confines of their respective wells.

When the container is placed upon a level surface, the disc plate 10 lies in a horizontal plane, and the inner surfaces of the bases 14 of the wells 12 are parallel to the base 2 of the container and level. It is the object of the user of the device to hold it in his hand with the glass 4 upward so that the balls 16 and 17 are visible. The user or player then gently tilts and levels the device as needed so as to cause the small balls 16 to roll about and finally become settled in the seats 15. The feat has been accomplished when the several balls 16 in each well 12 have been finally settled in their seats.

While an embodiment of the invention has been illustrated and described in detail, it is to be expressely understood that the invention is not limited thereto. Various changes can be made in the design and arrangement of the parts without departing from the spirit and scope of the invention; and it is my intent, therefore, to claim the invention not only as shown and described, but also in all such forms and modifications thereof as may be reasonably construed to be within the spirit of the invention and the scope of the appended claims.

What is claimed is:

1. A roll-ball device comprising a container closed at its bottom and having a transparent member sealing over the opposite end thereof, a group of balls rollable about the interior of the container upon the bottom thereof, separate means confining each ball to a specific range of movement, a flat disc member resting upon the group of balls and having a diameter slightly less than the inner diameter of the container, a group of small holes in the upper surface of the disc member, a cylindrical wall projecting upwardly from the surface of the disc member and surrounding the group of holes, and a ball element rollable over the upper surface of the disc member within the confines of the cylindrical wall, the ball element having a diameter greater than that of the holes and adapted to be seated in any one of the holes.

2. A roll-ball device as in claim 1, wherein the cylindrical wall has a rim at its free end in close proximity to the underside of the transparent member so as to block escape of the ball element from the confines of the cylindrical wall.

3. A roll-ball device as in claim 2, wherein wall elements corresponding in number to the said holes are provided within the confines of the cylindrical wall, and a ball of greater diameter and weight than the ball elements is also provided within the confines of said cylindrical wall.

4. A roll-ball device as in claim 1, wherein a group of cylindrical walls is arranged upon said disc member, a group of small holes in the surface of the disc member within the confines of each of said cylindrical walls, and there is within the confines of each of said cylindrical walls a group of ball elements and a ball of greater diameter and weight than the ball elements.

References Cited in the file of this patent

UNITED STATES PATENTS

644,209	Murphy	Feb. 27, 1900
1,169,593	Allen	Jan. 25, 1916
1,231,956	Slear	July 3, 1917
1,657,548	Post	Jan. 31, 1928

FOREIGN PATENTS

488,333	Germany	Jan. 3, 1930