Oct. 6, 1964 B. E. EAKIN ETAL 3,151,416

METHOD OF CONSTRUCTING A LIQUEFIED GAS CONTAINER

Filed May 15, 1961 2 Sheets-Sheet 1

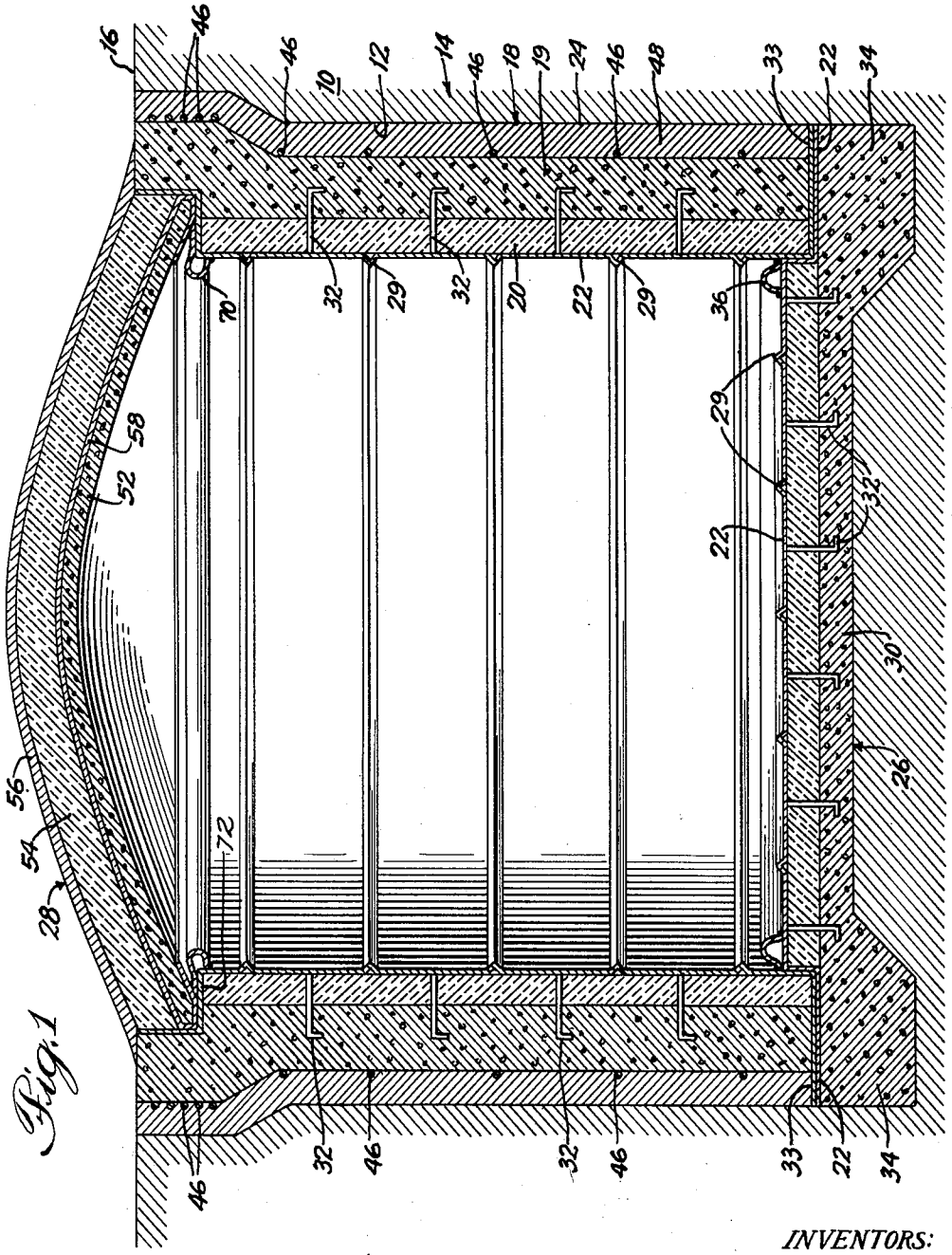

Fig. 1

INVENTORS:
Bertram E. Eakin
and Henry R. Linden,
BY Bair, Freeman & Molinare
ATTORNEYS.

Oct. 6, 1964 B. E. EAKIN ETAL 3,151,416

METHOD OF CONSTRUCTING A LIQUEFIED GAS CONTAINER

Filed May 15, 1961 2 Sheets-Sheet 2

Fig. 2

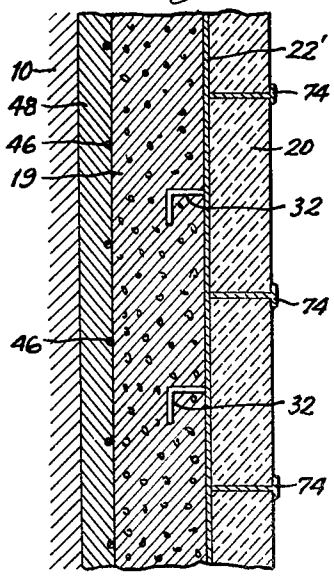

Fig. 3

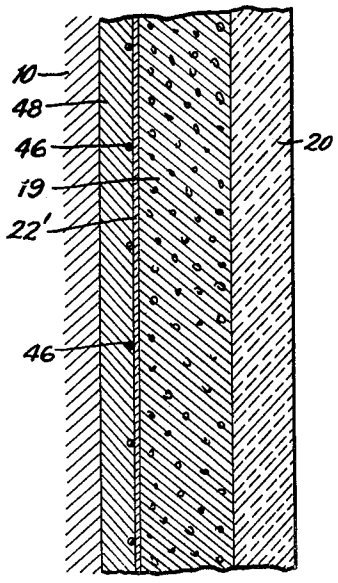

Fig. 4

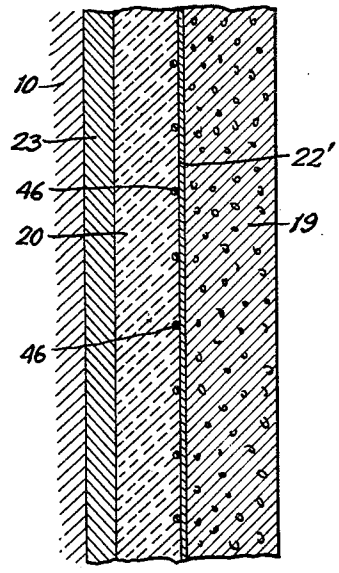

INVENTORS:
Bertram E. Eakin
and Henry R. Linden,

BY Bair, Freeman & Molinare.
ATTORNEYS.

United States Patent Office 3,151,416 Patented Oct. 6, 1964

3,151,416
METHOD OF CONSTRUCTING A LIQUEFIED GAS CONTAINER

Bertram E. Eakin, Naperville, and Henry R. Linden, Hinsdale, Ill., assignors to Institute of Gas Technology, a corporation of Illinois

Filed May 15, 1961, Ser. No. 110,184
2 Claims. (Cl. 50—532)

This invention relates to a new and improved method for storing liquefied gas, which enables storage of large volumes safely and economically. The invention more particularly relates to underground storage of liquefied fuel gas in an unexpectedly successful manner.

Liquefied gases, such as natural gas and methane, conventionally have been stored in surface or aboveground installations. It has also been proposed to store the gases in subterranean or underground installations, as illustrated in U.S. Patent No. 2,437,909. The liquefied gas in storage is a ready source of supplemental gas during periods of peak demand when pipeline capacity is insufficient. However, the prior storage methods and installations suffer from significant disadvantages, and especially in the cost of safe large-volume storage.

The conventional aboveground double-walled metallic tanks for cryogenic liquids can be constructed economically only in a relatively small size, for example, a maximum of about 56,000 barrels capacity at present. This necessitates unnecessary expenditures for multiple installations without significant compensating benefits. Conventional prestressed concrete tanks can be built in larger sizes, but they, too, require a double-walled construction to hold the large quantity of insulation which is required. The concrete tanks also must be erected on costly heated foundations to prevent frost-heaving of the supporting soil. This reduces the cost advantage of using large aboveground concrete tanks.

Another major obstacle to economical aboveground large-volume storage of liquefied gas is the requirement for a large surrounding area of uninhabited ground and for dikes to insure the safety of the population in the event of tank failure.

It is therefore an important object of the invention to provide safe large-volume storage of liquefied gas, including such gases as natural gas, methane, oxygen, nitrogen, and other gases stored at sub-freezing temperatures.

Another important object is to provide an economical method for storing liquefied gas, which are practically unlimited in the storage volume.

A particular object is to provide a container much simpler and more economical than those proposed heretofore, embodying a single-walled construction.

Another particular object is to provide a container for large-volume storage which utilizes a subterranean large-volume cavity, and which, furthermore, is not dependent upon the availability of certain geological formations.

An additional particular object is to provide a large-volume storage container which employs an earth formation as a thermal barrier or insulating medium, and also as a physical barrier against escape of the gas from the container.

Another object is to greatly reduce the requirements for conventional insulation, and further, to enable the use of a layer of load-bearing insulation.

These and other objects, advantages and functions of the invention will be apparent on reference to the specification and to the attached drawings illustrating several embodiments of the invention, in which like parts are identified by like reference symbols in each of the views, and in which:

FIGURE 1 is a vertical sectional view of a large-volume storage container for liquefied gas; and

FIGURES 2–4 are fragmentary sectional views illustrating alternative gas holder wall constructions.

The invention embodies the discovery that the ground pressures created by freezing of the surroundings by the cold of contiguous liquefied gas at sub-freezing temperatures do not exert destructive forces on an underground gas holder as provided in the invention. Freezing water undergoes 9% expansion, and when the water in the earth freezes, it is capable of exerting large forces due to the expansion. As the temperature drops below the freezing point, the frozen soil or rock contracts. Very unexpectedly, it was discovered that these forces are not destructive of a gas holder disposed in a subterranean cavity, as generally believed.

We have found that following the introduction of liquefied gas at sub-freezing temperatures into a subterranean gas holder, a zone of freezing temperature moves continuously outward from the gas holder, leaving behind a shell of frozen soil or rock. It was discovered that as freezing occurs, the forces created by the expansion of water changing to ice are not exerted inwardly towards the tank, but outwardly away from the tank. Where there is insufficient free space in porous geological formations to accommodate the expansion due to freezing, excess water is displaced outwardly into the surrounding media, with pressure building up only enough to produce movement of the water through the media. As the temperature drops below the freezing point, and the earth contracts, a slight pulling away of the earth from the gas holder occurs, with the formation of radial fissures in the earth, instead of exerting crushing forces on the gas holder. These phenomena were discovered to exist even with liquid nitrogen at −320° F.

In the invention, a very safe and economical subterranean container for large volume storage of liquefied gas is provided, which employs the surrounding earth formation as a thermal barrier, and also as a physical barrier to prevent large spillage from the gas holder in the case of failure. The installation costs are a fraction of the surface installation costs, exclusive of reductions in the cost of the site.

A container is provided in the invention which comprises an earth formation including a subterranean cavity. A gas holder is disposed in the cavity adjacent the surfaces of the cavity. The gas holder is constructed of a concrete wall, and a gas impermeable liner which extends over the wall. The container is well adapted for the storage of various cryogenic liquids, as referred to above, and it is especially advantageous for the storage of liquefied natural gas at essentially atmospheric pressure and about −260° F. The liquefied gas is supplied to storage by using conventional methods for liquefying pipeline natural gas during off-peak periods, or by delivery of liquefied gas by tanker or other conventional means.

It is further preferred to construct the gas holder with a layer of insulation, to reduce heat losses to economic levels during initial periods of operation. One of the features of the invention is that because of the large gas holder sizes which are practical and the large insulating effect of the surrounding earth formation, much less insulation is required. This permits the use of load-bearing insulation capable of supporting the internal load in the gas holder. In the prior surface installations, a large amount of insulation with extremely low thermal conductivity was required to minimize heat transfer to the liquefied gas. This required the use of a self-supporting interior shell and a self-supporting outer shell, because

the liquid loading could not be borne by such extremely low density, mechanically weak insulations.

Referring to the drawings, FIGURE 1 illustrates a container for large-volume storage of liquefied gas at sub-freezing temperatures according to the invention. The container includes an earth formation 10 having a subterranean large-volume cavity 12. A single-walled gas holder or tank 14 is disposed in the cavity adjacent the surfaces of the cavity, with the earth formation in insulating relation to the holder. The holder preferably is cylindrical, as in the illustrative embodiment, but it may be constructed in other configurations, e.g., rectangular. The ground surface level is indicated at 16. However, the holder 14 may be located deeper in the ground, completely covered and enclosed by the earth formation.

The invention is not dependent upon the availability of particular types of geological formations, and in this respect is advantageous over unwalled subterranean caverns and pits. The earth cavity 12 may be formed in a consolidated medium such as in a rock formation, which is capable of supporting the load in the gas holder 14. Alternatively, the cavity may be formed in an unconsolidated medium such as a sand formation, and the load is borne by the gas holder which is appropriately constructed of structural members. The gas holder 14 may be constructed in any suitable size; for example, a typical cylindrical tank capable of holding 285,000 bbls. of liquefied natural gas, equivalent to one billion standard cu. ft. of gas, would have a diameter of about 180 ft. and a depth of about 50 ft.

In a preferred embodiment illustrated in FIGURE 1, the gas holder 14 includes a concrete side wall 18 composed of a concrete panel 19, a layer of load-bearing insulation 20 on the inner surface of the concrete panel, and a liner 22 impermeable to the liquefied gas on the inner surface of the insulation layer, the several components thus forming a laminar construction. In a further preferred embodiment, a hydrophobic coat, such as indicated at 23 in the embodiment of FIGURE 4, may be provided on the outer surface 24 of the gas holder 14. This coat serves to prevent water from adhering to the concrete surface, and may comprise any suitable material, such as tar paper, mastic coating, petrolatum, a plastic film, and the like.

The hollow cylindrical side wall 18 and the circular bottom wall or base 26 of similar construction form an essentially single-walled gas holder 14 disposed in the earth cavity 12. The holder is closed by a circular top wall or cover 28 which has a concrete wall construction in the illustrative embodiment. In this case, the top wall is exposed to the atmosphere, so that additional insulation is necessary. Alternatively, the top wall may be located beneath the surface 16 of the ground, and with the top wall thus disposed in the earth cavity, it may embody the construction of the side and bottom walls 18 and 26, respectively. Concrete is the preferred structural component of a subterranean storage tank because of its unique low temperature properties, namely, an increase in compressive and tensile strengths as the temperature decreases over the range from ambient temperatures to the temperature of the liquefied gas, e.g., liquefied natural gas at −260° F.

The liner 22 serves as an impermeable barrier to prevent leakage from the gas holder, because of the difficulty in making a concrete structure free of cracks and because fissures form in surrounding water-bearing soil during cooling below freezing temperature. The liner 22 (or 22′) may be arranged internally of the concrete panel 19 or externally thereof, and it may be arranged either internally or externally of the insulation 20, as illustrated in the several views. Preferably, it constitutes the innermost layer as in FIGURE 1, and serves to keep the insulation dry. The liner 22 may include expansion bends 29.

The liner 22 or 22′ preferably is constructed of a material which has sufficient flexibility or elasticity to withstand the relative movements of the structural components of the gas holder. Preferred materials are aluminum and 9% nickel steel alloy. Other materials which do not become brittle under the conditions may be employed, such as stainless steel, copper, and certain plastics. The construction of liners of suitable types is described in U.S. Patent No. 2,777,295. The construction of suitable mechanical joints is described in U.S. Patent No. 2,932,964. Other joints are described in the former patent.

The liner may be secured to the vertical concrete side panel 19 and to the horizontal bottom wall concrete panel 30 by structural members 32, welded to the inner surfaces of the liner and embedded in the concrete. This construction also supports the insulation layer 20 interposed between the liner and the concrete panels in the construction of FIGURE 1.

The side wall 18 is supported on the bottom wall 26. A horizontal bearing plate 33 on the base of the side wall abuts on the liner 22 on the bottom wall above a thicker concrete rim 34 on the latter. The walls are arranged for moving relative to each other in response to expansive and contractive forces. An expansion joint 36 is formed where the side and bottom walls abut, to furnish an impermeable seal which flexes when the members move relative to each other.

The load-bearing insulation layer 20 preferably is installed within the concrete wall panels 19 and 30, as this method of insulation reduces the thermal stresses induced in the concrete during filling operations in the gas holder. The insulation is required to take the liquid load without crushing, which may be about 50 ibs. per sq. in. or greater. An exemplary insulating layer is constructed of blocks of "Foamglas" insulation material. Another material is light weight concrete made up with a light aggregate such as diatomaceous earth, which contains entrapped air. However, the density of this material is substantially greater.

The concrete side wall panel 19 and bottom wall panel 30 preferably are constructed of reinforced concrete. The side wall panel preferably is constructed of prestressed reinforced concrete. Such construction is disclosed in the aformentioned U.S. Patent No. 2,777,295. The side wall panel 19 is wrapped with prestressing high tensile wires or bands 46 extending vertically and horizontally circumferentially, which are under high stress. The wires may contact the concrete panel 19, as in FIGURES 1 and 2, or the interposed liner 22′, as in FIGURES 3 and 4. An outer protective layer 48 of mortar is applied over the tensed wires, in FIGURES 1–3. The construction of prestressed structures has also been described elsewhere in the art, for example, in U.S. Patent No. 2,803,868. Such construction is especially desirable when the earth formation is a non-load bearing formation.

The bottom concrete wall 30 need not be prestressed, but is preferably reinforced. It may be reinforced in a conventional manner with reinforcing rods extending longitudinally and transversely.

The top wall 28 of the gas holder 14 is constructed of an inner concrete wall panel 52, a covering thick layer 54 of light insulation, and a protective outer mortar coating 56. The top wall also includes a liner 58 constructed of a suitable steel, on the concrete panel 52. Suitable supply, withdrawal and vent fittings, not illustrated, are provided in the top wall 28, and they may be constructed in a manner such as described in the aforementioned U.S. Patent No. 2,777,295. The inner concrete wall panel 52 may be reinforced in the same manner as the bottom wall 26.

The top wall 28 and the side wall 18 are joined by an expansion joint and gas seal 70 where they abut at the top of the gas holder 14. The liquid level is maintained below this joint. The top wall is supported and may move on a horizontal and bearing plate 72 on the side wall. The top end of the side wall is reinforced by increased layers of prestressing wire 46.

The invention provides an advantageous method of making the new storage container illustrated in FIGURE 1. In this method, a concrete wall form is erected adjacent the surfaces of the earth cavity 12. The liner 22 is erected as the inner wall of the form, and the layer of load-bearing insulation 20 is attached thereto on its outer surface, interiorly of the form. Concrete is then poured into the form and hardened. When the concrete is prestressed as illustrated, high tensile wire is applied to the outer surface of the hardened concrete, under tension. The wire is covered with a layer of mortar, which is then allowed to harden.

The gas holder wall constructions illustrated in FIGURES 2–4 may be substituted for the side wall 18 in FIGURE 1. In FIGURE 2, the liner 22' is mounted on the inner surface of the concrete panel 19. The liner supports the insulation 20 on the inner surface of the liner, by brackets 74 secured to the liner.

In FIGURE 3, the liner 22' is mounted on the outer surface of the concrete panel 19. The prestressing wires 46 surround the panel and the liner, in contact with the outer surface of the liner.

In FIGURE 4, the concrete panel 19 is the innermost member. The liner 22' is mounted on the outer surface of the panel, and the prestressing wires 46 surround the two in contact with the outer surface of the liner. The insulation layer 20 is on the outer surface of the prestressing wires, and the layer is covered with a protective coating 23 of hydrophobic material.

The concrete walls are constructed so as to be capable of withstanding the internal and external forces exerted by the stored liquid and the surrounding media, as well as the stresses induced by temperature gradients in the walls. A layer of insulation is provided which is sufficient to reduce the heat losses during initial operation to an economic level; the soil acts as additional insulation after the tank has been operated long enough to establish a favorable temperature gradient through the surroundings.

In the invention, a large volume of liquefied gas at subfreezing temperatures is thus stored by containing the liquefied gas within a subterranean large-volume cavity. The surrounding earth formation is employed to reduce heat transfer to the liquefied gas. A wall is interposed between the earth formation and the liquefied gas to contain the gas within the cavity. A concrete gas holder is provided, comprising a concrete wall and an impermeable

liner. A layer of load-bearing insulation also may be included to advantage. The single-wall construction is both safe and very economical, and it is adapted for storing much greater gas volumes. The surprising discovery has been made that subterranean storage may be achieved successfully, without damage to the structure and disruption of the contents.

It will be apparent that various changes and modifications may be made in the construction and arrangement of the storage container, and in the methods, within the spirit and scope of the invention. It is intended that such changes and modifications be included within the scope of the appended claims.

What we claim as new and desire to secure by Letters Patent of the United States is:

1. A method of making a container for large-volume storage of liquefied gas at sub-freezing temperatures which comprises providing a subterranean large-volume cavity, erecting a concrete wall form adjacent the surfaces of said cavity, providing as the inner wall of said form a liner impermeable to said liquefied gas and an outer layer of load-bearing insulation laminated thereto, and pouring concrete in said form.

2. A method of making a container for large-volume storage of liquefied gas at cryogenic temperatures in a water-bearing formation, said method comprising the steps of erecting a wall form means having a bottom and side walls adjacent the surfaces of a subterranean large-volume cavity in the water-bearing formation, providing as the inner wall of said wall form means a liner impermeable to said liquefied gas and a layer of load-bearing insulation carried thereon pouring concrete around said form means to define a gas-holding container, and enclosing the top of said gas-holding container with an insulated cover.

References Cited in the file of this patent

UNITED STATES PATENTS

2,333,315	Klingberg	Nov. 2, 1943
2,413,243	Neff	Dec. 24, 1946
2,437,909	Cooper	Mar. 16, 1948
2,777,295	Bliss et al.	Jan. 15, 1957
2,796,739	Meade et al.	June 25, 1957
2,961,840	Goldtrap	Nov. 29, 1960