Nov. 13, 1951 A. P. CHARBONNEAU ET AL 2,575,095

ELECTROMAGNETIC CONTACTOR WITH PLUNGER ARMATURE

Filed Dec. 15, 1944

Fig. 1

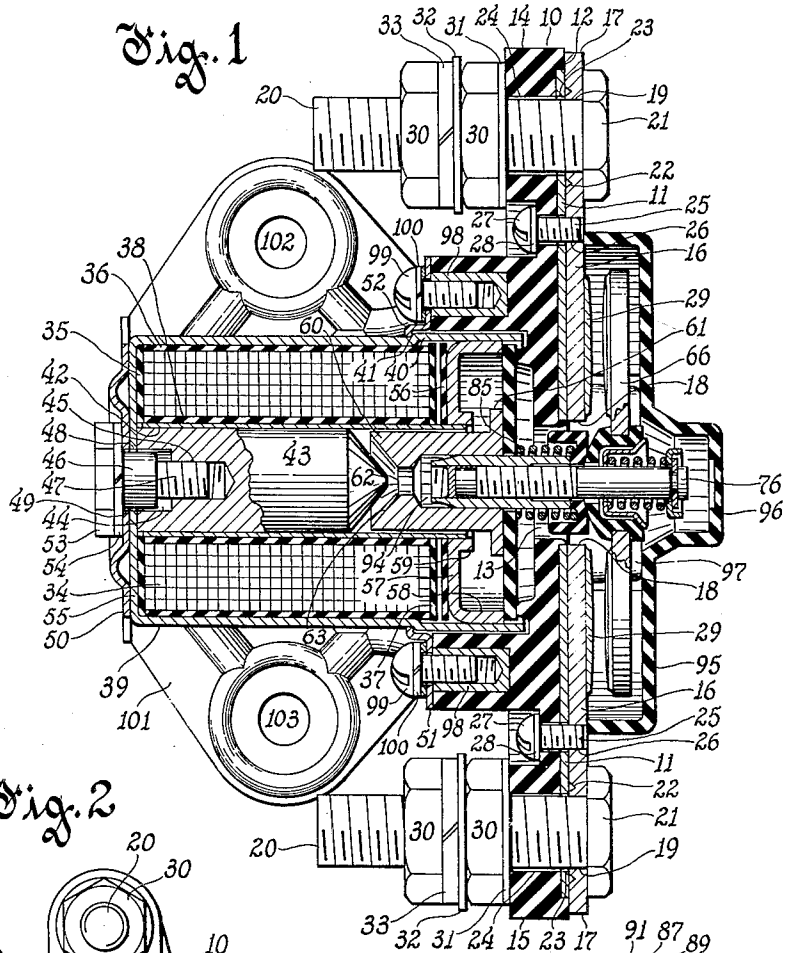

Fig. 2

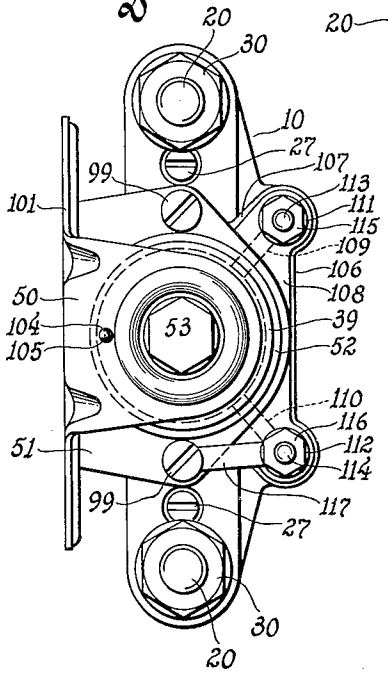

Fig. 3

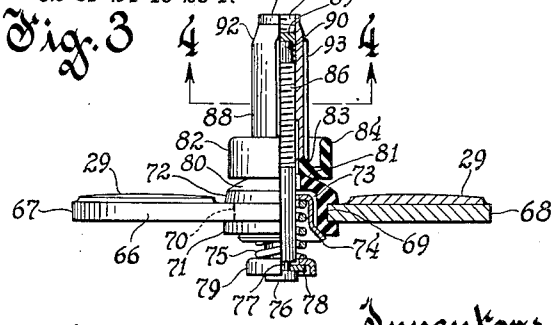

Fig. 4

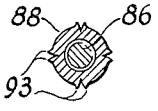

Inventors.
Allan P. Charbonneau.
Frank J. Russell
By Frank H. Hubbard
Attorney.

Patented Nov. 13, 1951

2,575,095

UNITED STATES PATENT OFFICE

2,575,095

ELECTROMAGNETIC CONTACTOR WITH PLUNGER ARMATURE

Allan P. Charbonneau and Frank J. Russell, Wauwatosa, Wis., assignors to Cutler-Hammer, Inc., Milwaukee, Wis., a corporation of Delaware

Application December 15, 1944, Serial No. 568,316

2 Claims. (Cl. 175—341)

1

This invention relates to improvements in electromagnetic contactors, and more particularly to contactors for use on airplanes and the like.

A primary object of the invention is to substantially reduce the size, weight and cost of contactors of the aforementioned character, while at the same time improving the operating characteristics thereof.

Another object is to increase the efficiency of the magnetic system of such a contactor to assist in attaining the results aforementioned.

Another object of the invention is to facilitate manufacture of such contactors by simplifying the form and manner of assembling and/or adjusting the various parts thereof.

Another object is to provide an improved placement of the biasing springs associated with the plunger and the contactor, whereby a maximum portion of the plunger may consist of iron.

Another object is to provide for use of a plunger having an integral flange whereby leakage flux is substantially reduced and the pull in the sealed position is increased.

Another object is to so construct and assemble the parts as to provide for sealing of both the flange and the plunger face, whereby a sealed pull of relatively high value is obtainable.

Another and more specific object is to provide a method of assembling the parts wherein a cup member is engaged by the plunger flange and pressed by the latter to the desired position within the coil shell as an incident to initial engagement of the plunger face with the stationary core member.

Another object is to provide for utilization of said flange and said cup member to effect determination of the length of the stroke of the magnet without requiring any further adjustment of said parts.

Another object is to provide a novel form of mounting bracket, a portion of which overlies and is attached to the core at the center of the coil; thus providing an increased thickness of magnetic material where the flux concentration is high.

Another object is to provide a novel sub-assembly of parts including a metal pin, a contactor carried thereby, and a bushing having threaded engagement with said pin whereby the pressure of said contactor against the stationary contacts may be preselected and thereafter maintained substantially constant.

Another object is to provide novel means affording self-alinement of the contactor with respect to the stationary contacts during normal use of the device.

2

Another object is to provide novel means enabling removal and/or replacement of the contactor and stationary contacts without in anywise affecting the initial adjustment of the switch parts.

Other objects and advantages of the invention will hereinafter appear.

The accompanying drawings illustrate an embodiment of the invention which will now be described; it being understood that the embodiment illustrated is susceptible of modification in respect of certain structural details thereof and/or in respect of the manner of assembling certain of the parts.

In the drawings, Figure 1 is an enlarged central sectional view of a contactor constructed in accordance with our invention.

Fig. 2 is an actual size plan view of the device, viewed from the left-hand side of Fig. 1.

Fig. 3 is a view, partly in elevation and partly in section, of a sub-assembly of certain parts illustrated in Fig. 1, and

Fig. 4 is a transverse section on the line 4—4 of Fig. 3, showing the means affording a drive fit of the bushing with respect to the flanged plunger of Fig. 1.

In the drawings the numeral 10 designates a base molded from any suitable insulating material. We prefer to employ either the molding material sold under the trade-name of "Melmac" or the molding material sold under the trade-name of "Bakelite." When base 10 is composed of "Bakelite" we prefer to mold or embed in one face thereof a pair of like sheet steel pole pieces 11, 11 which define the major portion of the length of the bottom wall of a transverse groove; the plane of which bottom wall is indicated by numeral 12. The adjacent ends of pole pieces 11 are spaced from each other a distance only slightly greater than the diameter of a circular opening 13 formed in base 10, and the outer ends of said pole pieces are spaced only slightly from the opposite ends 14 and 15 of said base. Said pole pieces 11 are preferably provided at opposite sides thereof with upstanding flange portions (not shown) which extend a distance approximately equal to the diameter of the contact tips and along the sides thereof. The outer edges of said flange portions are preferably coplanar with the outer surface of said base. Said pole pieces therefore act in a known manner to assist in extinguishing any arcs which may be formed.

Each of the two stationary contacts comprises a flat and relatively thick punched plate 16 of metal of good electrical conductivity (preferably copper) having rounded ends 17 and 18, respec-

tively. Each plate 16 is provided, in a concentric relationship to the rounded end 17 thereof, with a relatively large tapped opening 19 which is adapted to threadedly receive the shank 20 of a terminal bolt, the polygonal head of which is designated by numeral 21. After complete threading of each shank 20 into an opening 19 the material of plate 16 is ring-staked around said opening 19, as indicated at 22, to lock said parts against relative movement, and to provide low resistance electrical contact.

Pole pieces 11 are provided respectively with openings 23 and base 10 is provided with openings 24 respectively alined therewith to provide for slidable insertion of shanks 20 therethrough. A screw has its threaded shank 25 freely penetrating alined openings in base 10 and in the respective pole piece 11 and taking into a tapped opening 26 in each plate 16 to rigidly secure the latter and its associated terminal bolt to said base. The head 27 of each screw is preferably accommodated within a countersink or recess in base 10, and a lockwasher 28 of suitable form is also preferably positioned between the screw-head and the bottom wall of the recess. If desired the remainder of each recess may be filled with a suitable wax or cement (not shown) to additionally restrain the screws and insulate the heads 27 thereof.

Prior to assembly of each plate 16 with respect to base 10 as aforedescribed said plates have attached thereto in any suitable manner the silver base contact tips designated by numeral 29. In practice it is preferred that plates 16 be prepared in the manner disclosed in Patent No. 2,361,089, granted October 24, 1944, to I. W. Cox, and that a suitable metallic composition in powder form be united therewith by molding in the manner disclosed in said patent.

The shank 20 of each terminal bolt has threaded thereonto a nut 30 which assists in rigidly attaching the same and its associated plate 16 to base 10; a lockwasher 31 of well known form preferably being interposed between said nut 30 and base 10. A second nut 30 is also thereafter threaded onto each shank 20 to act as a clamp or binding element for the bared end of a circuit wire (not shown) which is preferably located between a metal washer 32 and the inner nut 30. A split lockwasher 33 is preferably interposed between washer 32 and the outer nut 30 to prevent accidental loosening of the latter.

The operating coil of the contactor is designated by numeral 34, said coil being wound in a known manner and impregnated with a suitable material to insure against failure thereof when in use. All surfaces of coil 34 are provided with a suitable insulating covering, as indicated by numerals 35, 36, 37 and 38. Said coil as thus covered is positioned within a seamless cup-shaped shell 39, preferably formed of steel; said shell having at its open end an outwardly offset or slightly enlarged portion 40, whereby a shoulder 41 is provided.

A relatively thin tube 42 of non-magnetic material such as brass is adapted to fit snugly within the central passage or opening in coil 34; said tube having positioned at one end thereof, and rigidly and permanently attached thereto in any suitable manner, a core member 43 formed of magnetic material such as steel. Member 43 is provided at one end with a concentric countersink 44 and tapped recess 45; the former being adapted to freely slide over the cylindrical enlarged portion 46 of a specially formed attaching bolt, whose threaded shank 47 takes into recess 45. Portion 46 of said bolt is accommodated within alined openings 48 and 49 respectively formed in the end wall of shell 39 and in the arm 50 of a supporting bracket. Another and substantially parallel arm 51 of said bracket has an annular flange portion 52 formed thereon to accommodate that end portion of shell 39 which is of smaller diameter, and to snugly fit against the enlarged portion 40 and shoulder 41 aforementioned. Said special bolt is provided with a head 53 of hexagonal or other polygonal form; a lockwasher 54 being interposed between the same and bracket arm 50. Thus upon tightening of said bolt the shank 47 draws core member 43 into direct engagement with the inner surface of the end wall 55 of the shell; the metal tube 42 being simultaneously moved therewith to the assembled position thereof illustrated.

Thereafter an annular punched plate 56 of insulating material, such as "Bakelite" is inserted within the enlarged portion 39 of the shell, in a relation to closely surround and assist in positioning the projecting end of tube 42. A steel cup washer 57 is then inserted into said enlarged portion 40 of the shell; said cup washer having an outer annular flange 58 adapted to slidably fit within said enlarged portion, and an inner, relatively shorter, annular flange 59 adapted to surround at least a portion of the projecting end of tube 42.

The plunger of the contactor is composed of magnetic material, the same having a substantially cylindrical main portion 60 and an integral annular flange 61 at the outer end thereof. As shown the end 62 of the aforementioned core 43 is preferably of substantially cone-shape, and the adjacent end of plunger 60 is correspondingly of hollow cone-shape, as shown at 63 to fit snugly thereagainst. The arrangement is such that flange 61 overlies the upper edge of the inner flange 59 on the cup washer, so that when plunger 60 is pressed inwardly until the surface 63 seats firmly against the cone-shaped surface 62, the flange 61 will have simultaneously engaged flange 59 to force the cup washer 57 the desired distance into the metal shell. In this manner simultaneous sealing of surface 63 with surface 62 and of flange 61 against flange 59 may be insured. After cup washer 57 is thus properly positioned, such positioning may be made rigid and permanent in any suitable manner, such as by welding or soldering said cup washer and shell to each other.

The bridging contactor comprises a flat punched plate 66, preferably of copper; said plate having circular tips 29, 29, like those aforedescribed, rigidly attached to opposite ends thereof. Said contactor tips 29 are properly spaced (see Fig. 1) for alinement thereof with tips 29 of the stationary contacts. Plate 66 preferably has its ends 67 and 68 rounded to conform substantially with the contours of the tips 29 mounted thereon. Said plate 66 is also provided with a central circular opening 69, within which an insulating bushing 70 is positioned; said bushing 70 being preferably molded in situ. Bushing 70 is preferably composed of "Melmac," which is characterized by its effective resistance to damage by heating or arcing. Bushing 70 has formed integrally therewith the annular flanges 71 and 72, which overlie the respective opposite faces of plate 66 around said opening 69. A recess 73 is formed in bushing 70 to accommodate the substantially correspondingly shaped cup washer 74, which is preferably formed of brass.

A coiled compression spring 75 has one end seated within cup washer 74; a metal pin 76, preferably of steel, penetrating alined central openings in bushing 70 and cup washer 74, and having an annular groove 77 formed therein adjacent one end thereof. A horseshoe-shaped washer 78 is pressed into groove 77, and a metal cup washer 79 is positioned upon pin 76 to surround washer 78 and prevent accidental lateral displacement thereof; the other end of spring 75 abutting against the exterior surface of cup washer 79.

The outer surface 80 of bushing 70 is preferably in the form of a segment of a sphere, for cooperation with the correspondingly shaped concave bearing surface 81 upon a molded hollow insulating member 82, also preferably composed of "Melmac." Member 82 has a relatively short inner flange 83 and a relatively longer outer flange 84, between which one end of a coiled compression spring 85 (Fig. 1) is adapted to seat. Prior to assembly of spring 85, however, the threaded end portion 86 of pin 76 is screwed into the internally threaded portion 87 of a bushing 88, preferably machined from a steel rod. The edge of the aforementioned flange 83 is adapted to abut against the adjacent end of bushing 88, whereby upon a predetermined degree of turning of pin 76 relatively to bushing 88, spring 75 will be compressed to a degree to insure the desired pressure of the bridging contactor against the stationary contacts when all of the parts are finally assembled. In other words, the adjustment of pin 76 with respect to bushing 88 is merely such as to provide the desired degree of compression of spring 75, as measured in pounds. When the desired adjustment has been effected, a quantity of molten solder 89 or the like is dropped into the end of bushing 88 to overlie and surround the reduced end portion 90 of pin 76 to restrain said parts against further movement relatively to each other. Bushing 88 is provided with an end portion 91 of reduced external diameter, toward which the intermediate portion 92 is tapered as shown. The main body portion of bushing 88 has four equally spaced longitudinal grooves formed therein by rolling or otherwise in such manner that four pairs of longitudinal fins or projections 93 are provided (Figs. 3 and 4). Fins 93 are of such lateral dimensions as to provide for a force fit of bushing 88 into a recess 94 in the outer end of bushing 60; bushing 88 being pressed inwardly to a degree to afford the proper wear allowance of bridging contactor 66.

A relatively thin walled molded insulating cover member 95 is provided to house or enclose contactor 66; said member 95 having a pair of openings formed therein (one on each side of the hollow dome or extension 96, Fig. 1). Base 10 has a pair of upstanding lugs formed integrally therewith on opposite sides of the groove 12; one of said lugs being shown at 97 in Fig. 1. Said lugs serve to guide the reciprocating movements of contactor 66, and each of said lugs has molded therein and projecting outwardly therefrom a threaded stud (not shown) respectively penetrating said openings in cover 95; a pair of nuts (not shown) being threaded onto said studs to clamp cover 95 in proper position upon base 10.

The aforementioned bracket arm 51 is provided with perforations (Fig. 1) to be alined with the tapped recesses in metal inserts 98, 98 in base 10; suitable screws 99 and lock-washers 100 being provided for clamping said bracket arm and its associated parts to base 10.

The connecting portion 101 of the bracket is provided with openings 102 and 103 to accommodate the shanks of suitable mounting bolts or screws (not shown) for attachment of the complete device to a panel or other suitable support.

The aforementioned arm 50 of the supporting bracket is provided with a relatively small opening 104 which is adapted to accommodate a raised portion or boss 105 formed upon the end wall 55 of shell 39, whereby relative rotation of the shell and bracket is prevented. Although said bracket is formed of relatively thin sheet metal, the same is provided with suitable embossed ribs and fillets, as shown, to strengthen the same and resist distortion thereof when in use.

As shown in Fig. 2, base 10 is provided with an integral extension 106 having a downwardly offset ledge 107, which is adapted to accommodate, in a substantially flush relationship, the lateral extensions of the insulating members or plates 37 and 56 (Fig. 1), such extension of plate 37 being designated by numeral 108 in Fig. 2. Interposed between said extensions are a pair of relatively thin copper ribbons, shown in dotted lines at 109 and 110; said ribbons being attached to opposite ends of the wire of coil 34 and having enlarged ends in the form of eyelets which are upset over the outer surface of plate 37, as indicated at 111 and 112 in Fig. 2. Screws 113 and 114 have their shanks extending upwardly through alined openings in base extension 106, plates 56 and 37 (and eyelets 111, 112), and one or more nuts 115, 116 are associated with said screws to clamp the parts in position and to provide for attachment of suitable terminal wires. If desired a bus member 117 may be interposed between screw 114 and one of the screws 99 to provide for grounding of the coil circuit.

We claim:

1. In an electromagnetic contactor, in combination, a cup-shaped shell of magnetic metal, an operating coil positioned within said shell, a core member of magnetic metal positioned within said coil, a cup-shaped metal member positioned within the open end of said shell and rigidly secured to the latter to retain said coil in assembled position, said shell having an external annular shoulder formed thereon adjacent said open end thereof, a bracket of magnetic metal having a pair of substantially parallel arms and a connecting portion, one of said arms having a relatively large opening formed therein to slide onto said shell and seat against said shoulder, said arm having perforated integral lateral projections, a molded insulating base formed to accommodate the open end portion of said shell and against which said arm is adapted to seat, screws penetrating said perforations and having threaded engagement with said base to clamp said parts in assembled relation, the other arm of said bracket overlying the other end of said shell to provide an increased thickness of magnetic material where the flux concentration is high, said last mentioned arm and said shell having alined openings formed therein, a securing screw penetrating said openings and having threaded engagement with said core to rigidly secure the latter and said last mentioned arm to said shell, and said bracket having means associated therewith to provide for attachment thereof to a suitable support.

2. In an electromagnetic contactor, in combination, a cup-shaped shell of magnetic metal, an operating coil positioned within said shell, a core member of magnetic metal positioned with-

in said coil, a cup-shaped metal member positioned within the open end of said shell and rigidly secured to the latter to retain said coil in assembled position, said shell having an external annular shoulder formed thereon adjacent said open end thereof, a bracket of magnetic metal having a pair of substantially parallel arms and a connecting portion, one of said arms having a relatively large opening formed therein to slide onto said shell and seat against said shoulder, said arm having perforated integral lateral projections, a molded insulating base formed to accommodate the open end portion of said shell and against which said arm is adapted to seat, screws penetrating said perforations and having threaded engagement with said base to clamp said parts in assembled relation, the other arm of said bracket overlying the other end of said shell to provide an increased thickness of magnetic material where the flux concentration is high, said last mentioned arm and said shell having alined openings formed therein, a securing screw penetrating said openings and having threaded engagement with said core to rigidly secure the latter and said last mentioned arm to said shell, said bracket having means associated therewith to provide for attachment thereof to a suitable support, said cup-shaped metal member having an opening formed therein and an integral flange extending axially outward thereabout, a plunger of magnetic metal slidable within said last mentioned opening and having an inner end adapted to seat against said core, said plunger having a laterally extending integral flange overlying and engaging the flange on said cup member when said plunger is in its inner extreme position, and spring means associated with said plunger externally of the latter to normally bias the same to its outer extreme position.

ALLAN P. CHARBONNEAU.
FRANK J. RUSSELL.

REFERENCES CITED

The following references are of record in the file of this patent:

UNITED STATES PATENTS

Number	Name	Date
590,420	Lundell	Sept. 21, 1897
791,591	Sundh et al.	June 6, 1905
1,460,517	Stevens	July 3, 1923
1,650,799	Lee	Nov. 29, 1927
1,928,846	Allen	Oct. 3, 1933
1,933,046	Carter	Oct. 31, 1933
2,008,275	Dyer	July 16, 1935
2,111,232	Wetzel	Mar. 15, 1938
2,121,657	Fisher	June 21, 1938
2,278,967	Allen	Apr. 7, 1942
2,288,938	Claytor	July 7, 1942
2,318,672	Claytor et al.	May 11, 1943
2,352,550	Joseph	June 27, 1944
2,381,075	Nelsen	Aug. 7, 1945
2,391,277	Stapleton	Dec. 18, 1945
2,407,603	Derungs	Sept. 10, 1946
2,414,961	Mason et al.	Jan. 28, 1947

FOREIGN PATENTS

Number	Country	Date
184,507	Germany	Mar. 25, 1907
389,930	Germany	Feb. 15, 1924
867,141	France	Oct. 1, 1941
230,351	Switzerland	Mar. 16, 1944