US00D996342S

(12) **United States Design Patent** (10) **Patent No.: US D996,342 S**
Li (45) **Date of Patent: ** Aug. 22, 2023**

(54) **BICYCLE RACK**

(71) Applicant: **Luyue Li**, Pingxiang (CN)

(72) Inventor: **Luyue Li**, Pingxiang (CN)

(**) Term: **15 Years**

(21) Appl. No.: **29/807,495**

(22) Filed: **Sep. 13, 2021**

(51) **LOC (14) Cl.** **12-11**

(52) **U.S. Cl.**
USPC **D12/407**

(58) **Field of Classification Search**
USPC D12/111, 114, 115, 400, 406, 407, 412; D21/419, 423, 432
CPC B62K 3/00; B62K 3/02; B62K 3/06; B62J 7/00; B62J 7/08
See application file for complete search history.

(56) **References Cited**

U.S. PATENT DOCUMENTS

4,383,625 A * 5/1983 Kiang B62J 7/04 224/450
D271,759 S * 12/1983 Patterson D12/407
4,477,004 A * 10/1984 Barro B62J 7/04 224/450
D285,426 S * 9/1986 Blackburn D12/407
4,760,943 A * 8/1988 Bass B62J 9/24 224/450
D299,225 S * 1/1989 Blackburn D12/407
D310,808 S * 9/1990 Kosecoff D12/407
D310,809 S * 9/1990 Pawsat D12/407
D324,016 S * 2/1992 Hsu D12/407
5,090,717 A * 2/1992 Belka B62J 7/04 280/304.5
D331,736 S * 12/1992 Newbold D12/407
D336,877 S * 6/1993 Fenton D12/406
D352,267 S * 11/1994 Blackburn D12/407
D369,138 S * 4/1996 Gotschi D12/407
5,649,657 A * 7/1997 Chuang B62J 7/00 224/430
D391,918 S * 3/1998 Dunn D12/407
D883,181 S * 5/2020 Uimonen D12/406
2010/0224662 A1* 9/2010 Crum, Jr. B62J 7/04 224/430

(Continued)

OTHER PUBLICATIONS

Anggoer Rear Bike Rack with Basket, Oct. 2, 2021, Amazon[online],[Site Visit Feb. 13, 2023], URL: https://www.amazon.com/ANGGOER-Rear-Bike-Basket-Cargo/dp/B09HNQ5L5B?th=1&psc=1 (Year: 2021).*

(Continued)

Primary Examiner — Calvin E Vansant
Assistant Examiner — Giang Hoang Tran
(74) *Attorney, Agent, or Firm* — Jose Cherson Weissbrot

(57) **CLAIM**

The ornamental design for a bicycle rack, as shown and described.

DESCRIPTION

FIG. **1** is a front elevational view of a bicycle rack showing my new design;
FIG. **2** is a rear elevational view thereof;
FIG. **3** is a left side view thereof;
FIG. **4** is a right side view thereof;
FIG. **5** is a top plan view thereof;
FIG. **6** is a bottom plan view thereof;
FIG. **7** is a perspective view of a bicycle rack showing my new design;
FIG. **8** is the second perspective view thereof; and,
FIG. **9** is a perspective view showing that the basket of a bicycle rack is folded.
The broken lines in the figures are for the purposes of illustrating portions of the bicycle rack, which form no part of the claimed design.

1 Claim, 9 Drawing Sheets

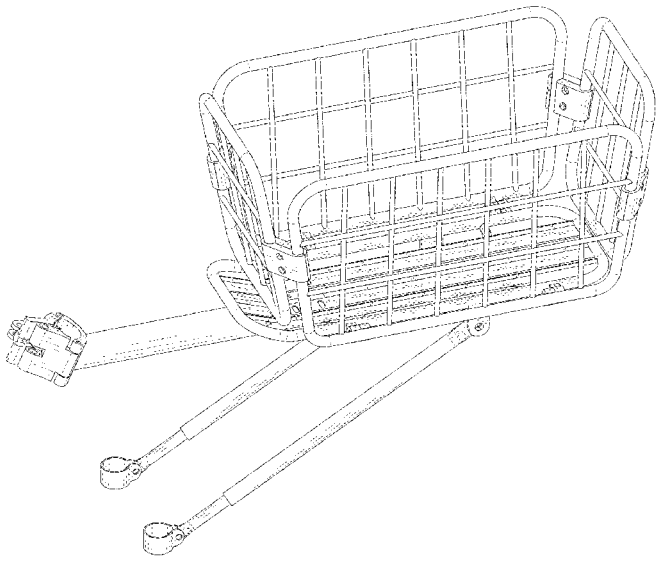

(56) **References Cited**

U.S. PATENT DOCUMENTS

2012/0145759	A1*	6/2012	Shih	B62J 7/00 224/412
2014/0224852	A1*	8/2014	Ponder	B62J 7/00 224/447
2021/0291920	A1*	9/2021	Chuang	B62J 7/04

OTHER PUBLICATIONS

Bike Rear Rack with Basket, Sep. 21, 2022, Amazon[online],[Site Visit Feb. 13, 2023], URL: Amazon.com : Bike Rear Rack Versatile with Basket, 165lb Load Bike Rear Rack, Bike Cargo Rack, Quick Mount, Adjustable, Comes with Free Bungee Cord and mounting Tools and Waterproof Cover: Sports & Outdoors (Year: 2022).*

* cited by examiner

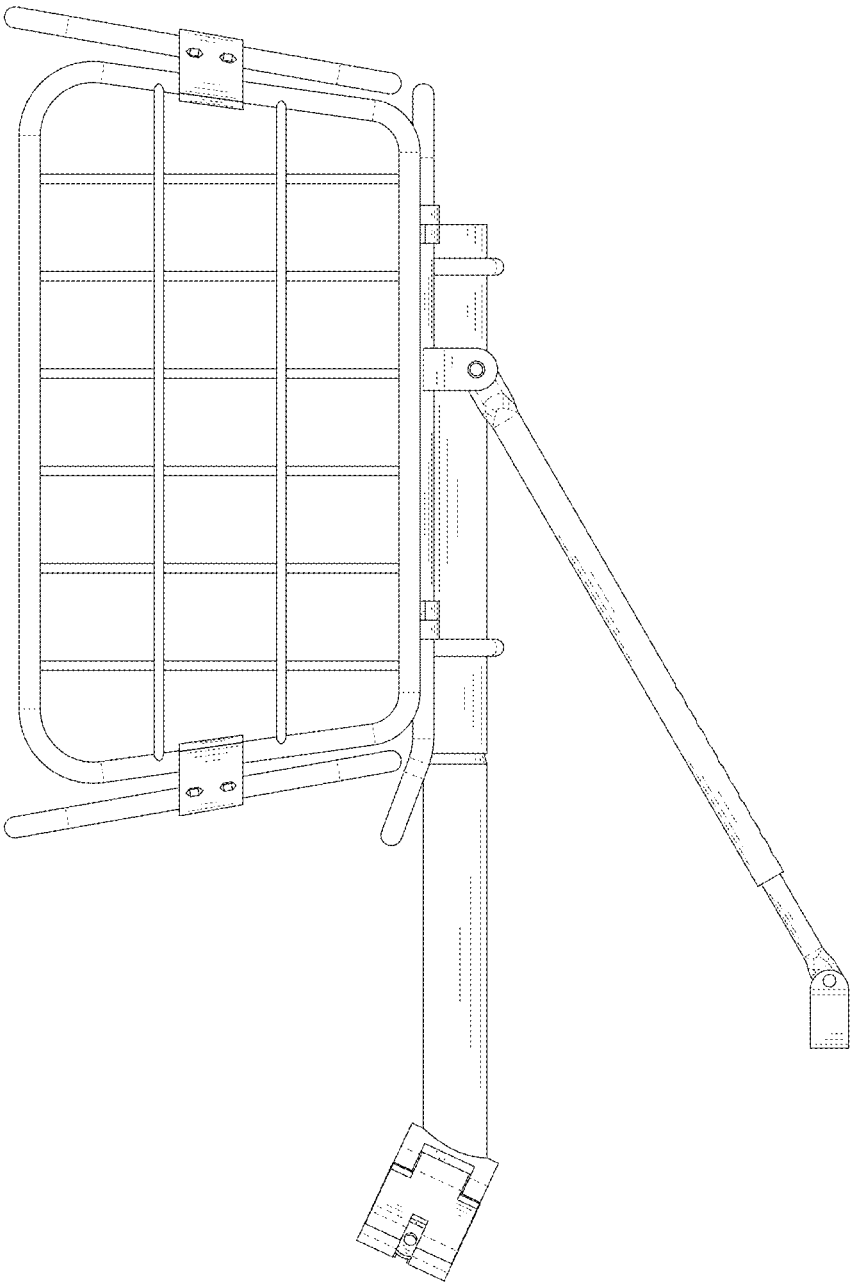

FIG. 1

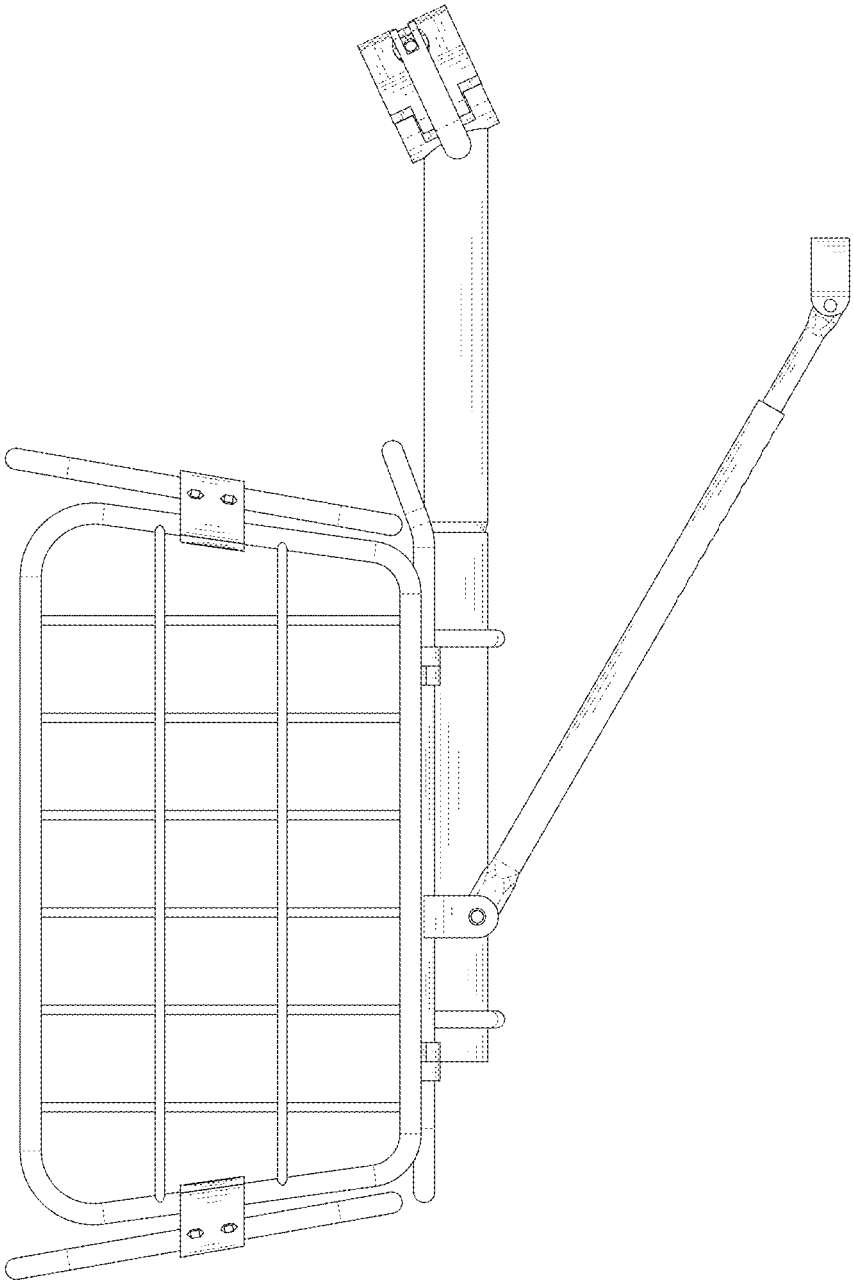

FIG.2

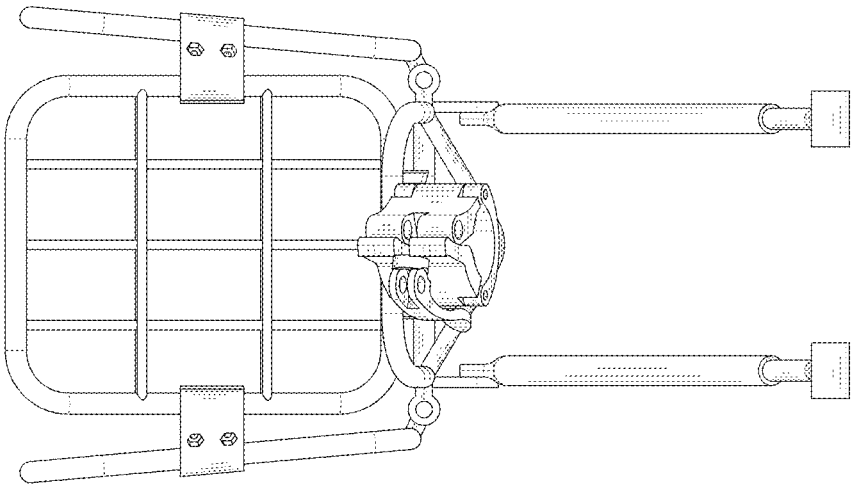

FIG. 3

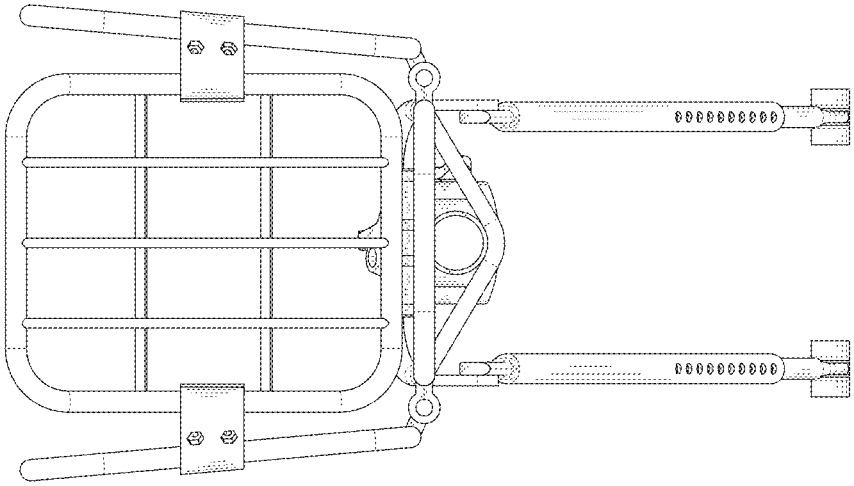

FIG. 4

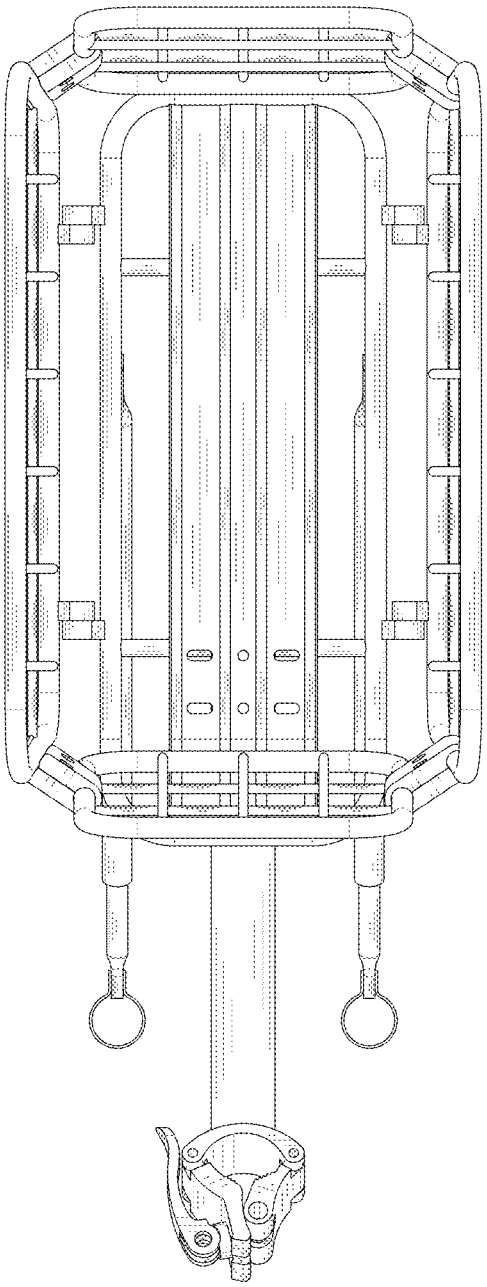

FIG.5

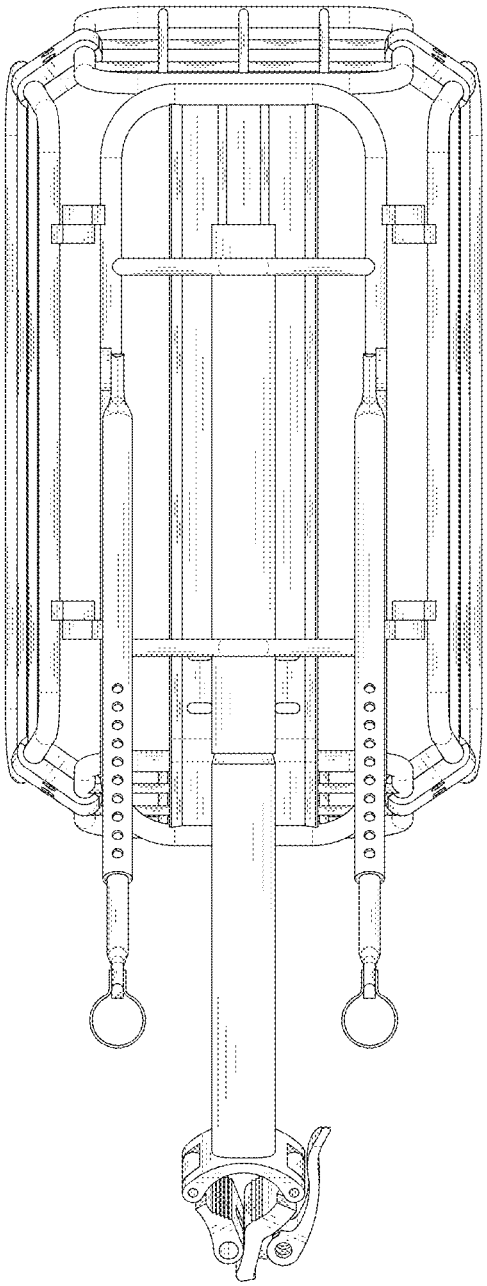

FIG.6

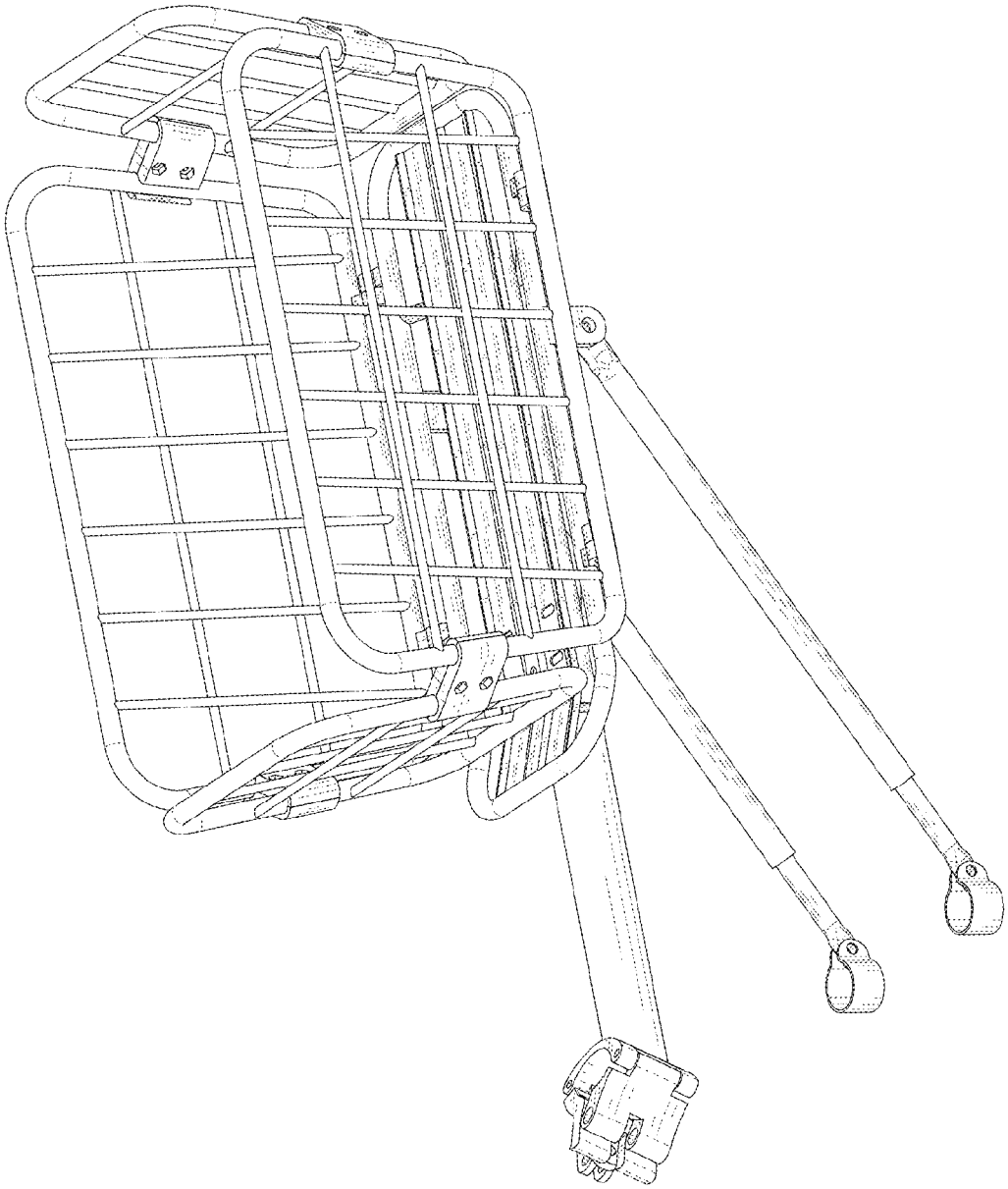

FIG. 7

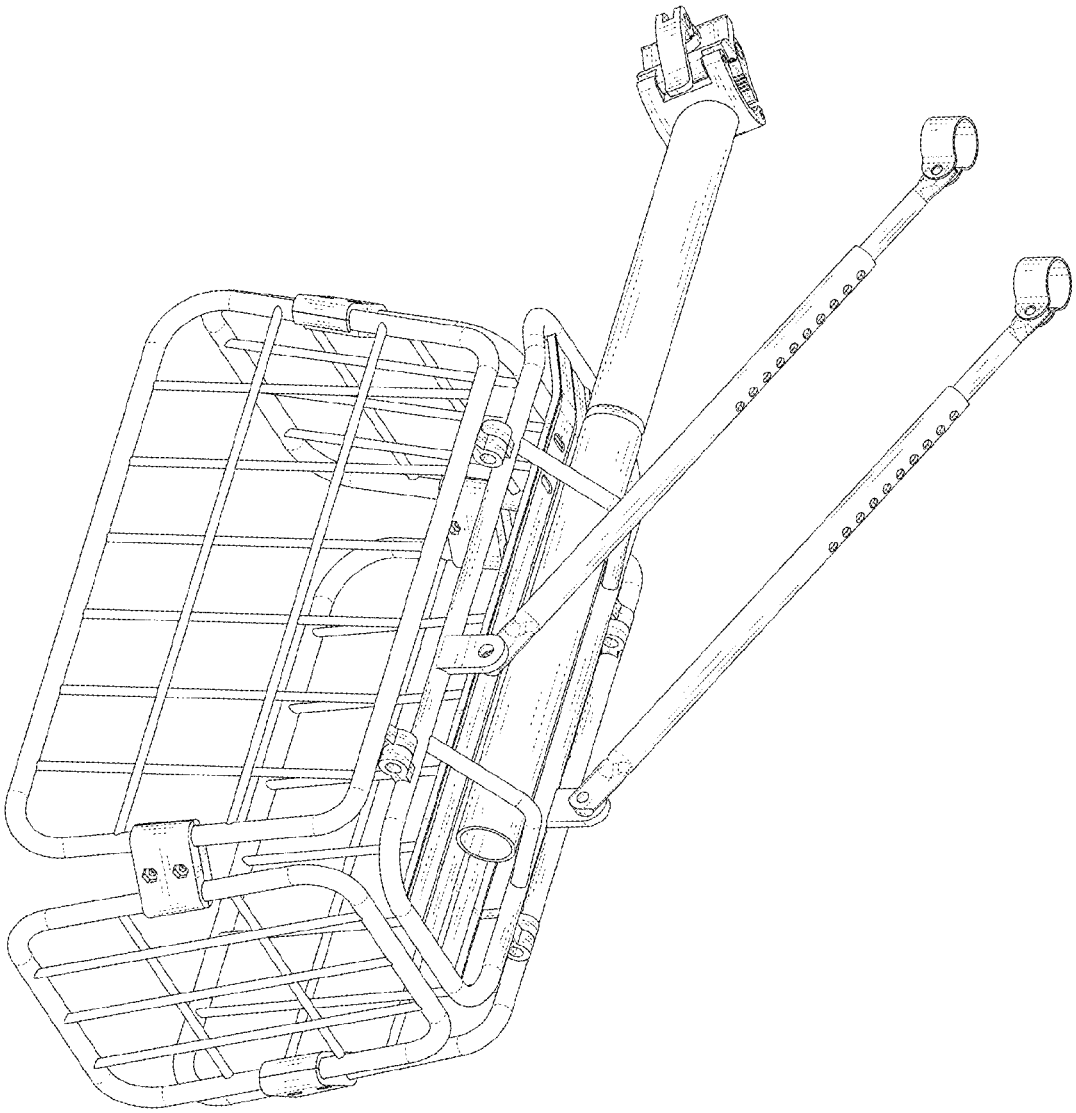

FIG. 8

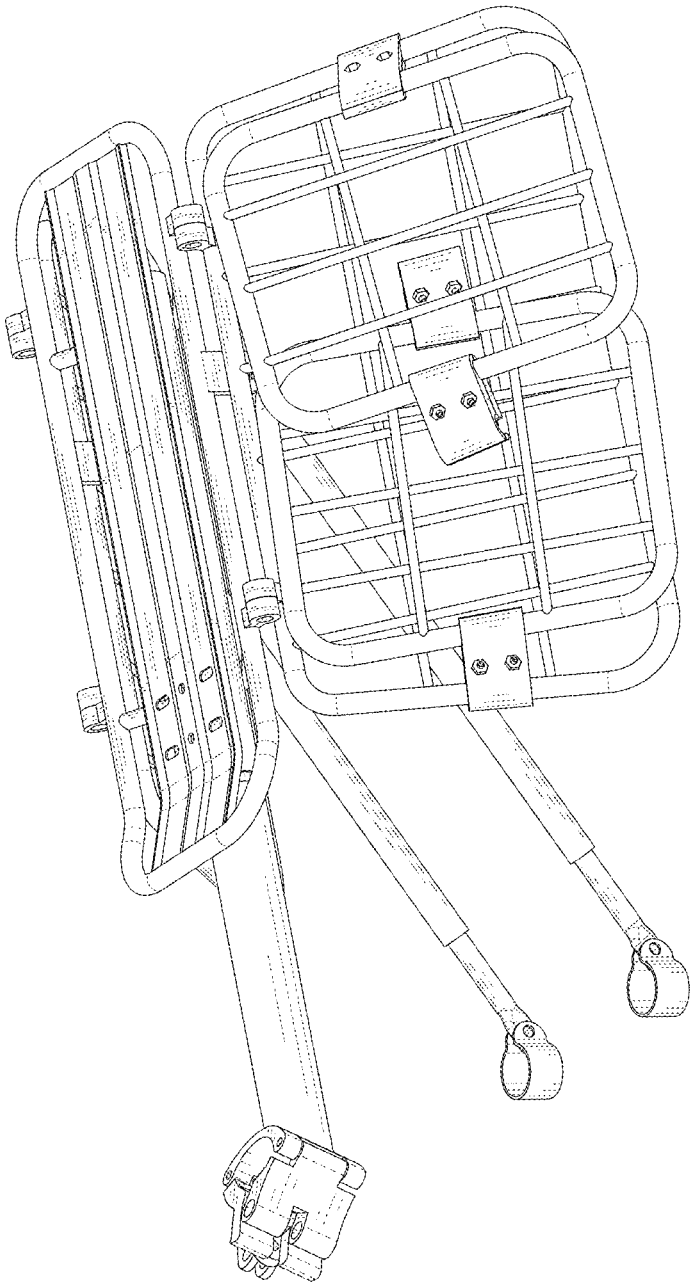

FIG. 9