Office de la Propriété Intellectuelle du Canada
Un organisme d'Industrie Canada

Canadian Intellectual Property Office
An agency of Industry Canada

CA 2196730 C 2006/07/25

(11)(21) 2 196 730

(12) BREVET CANADIEN
CANADIAN PATENT

(13) C

(22) Date de dépôt/Filing Date: 1997/02/04

(41) Mise à la disp. pub./Open to Public Insp.: 1998/08/04

(45) Date de délivrance/Issue Date: 2006/07/25

(51) Cl.Int./Int.Cl. *A47F 3/02* (2006.01), *A47F 1/12* (2006.01)

(72) Inventeurs/Inventors:
MANIAS, NANCY, CA;
PERRIN, MARK, CA

(73) Propriétaire/Owner:
PFIZER CANADA INC., CA

(74) Agent: BERESKIN & PARR

(54) Titre : PRESENTOIR
(54) Title: DISPLAY RACK

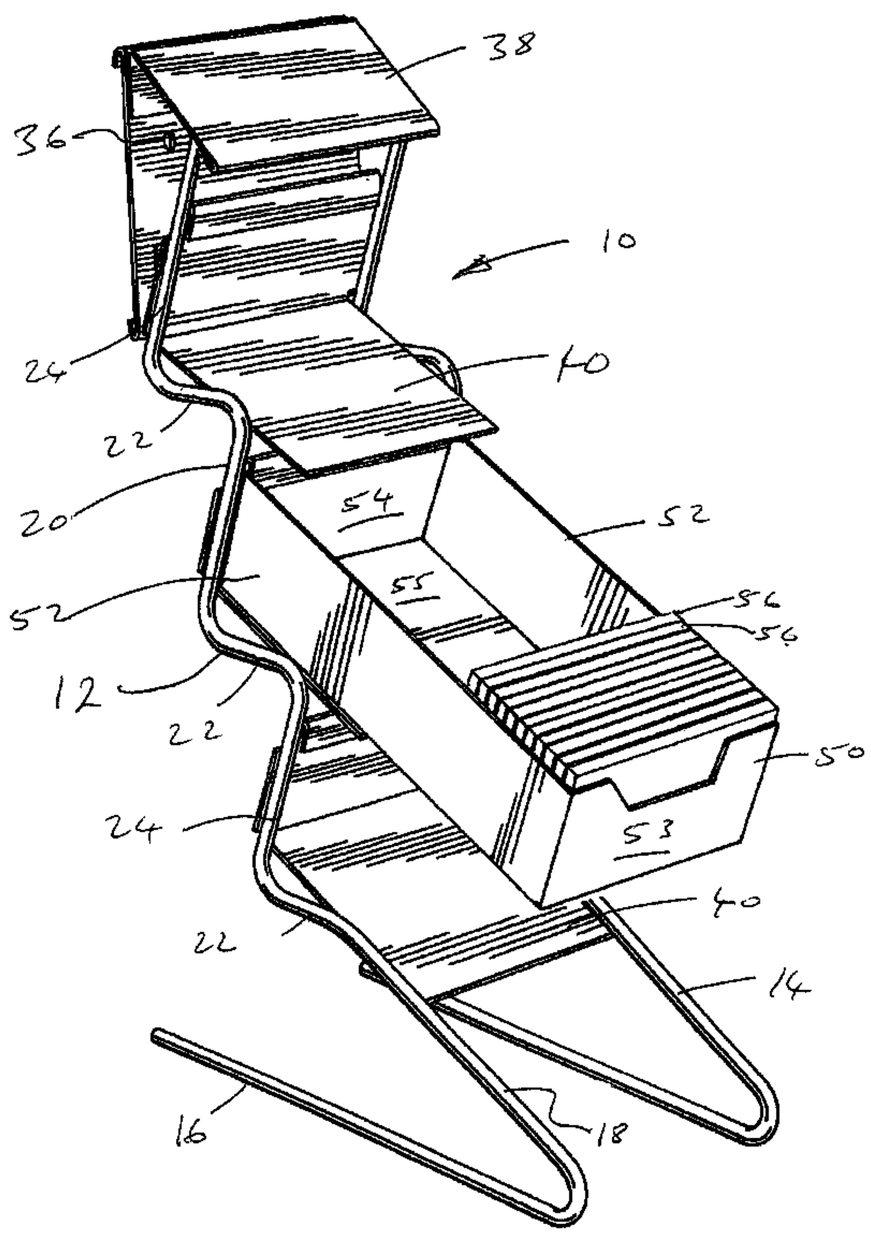

(57) Abrégé/Abstract:
A display rack has a supporting framework and a number of container supports. Each container support includes a downwardly facing slot, which can be formed between a rear portion and a downwardly-extending flange. A bottom portion extends from the rear portion. Containers, which can be open cardboard containers, which are generally rectangular, are supported on the rear portions. Each container is longer than the bottom portion, so that its weight naturally forces the rear wall of the container upwards. The upper edge of the rear wall then comes into engagement with the slot, to secure the container.

ABSTRACT OF THE DISCLOSURE

A display rack has a supporting framework and a number of container supports. Each container support includes a downwardly facing slot, which can be formed between a rear portion and a downwardly-extending flange. A bottom portion extends from the rear portion. Containers, which can be open cardboard containers, which are generally rectangular, are supported on the rear portions. Each container is longer than the bottom portion, so that its weight naturally forces the rear wall of the container upwards. The upper edge of the rear wall then comes into engagement with the slot, to secure the container.

Title: Display Rack

FIELD OF THE INVENTION

This invention relates to display racks, and more particularly is concerned with display racks for displaying merchandise for sale at a retail level.

BACKGROUND OF THE INVENTION

There are many goods which are packages in relatively small quantities and which are intended for sale individually at the retail level. This raises various problems, such as: displaying the goods in a manner which keeps the goods protected and arranged; displaying the goods in a manner which is attractive to potential customers; enabling customers to have ready access to individual items of the goods; enabling containers holding individual packages to be readily replaced with full containers.

At least some of these problems, individually, have been recognised in the art. Thus, the following U.S. design and utility patents disclose display racks or the like:

D 114,997	E. E. Humphries
D 133,723	E. P. May
D 186,254	Georges Tirlet
D 189,900	Marcel M. Arnould
D 206,737	Roy C. Brown
D 287,912	Pietro Ferrero
D 295,931	George A. Bezzerides
D 369,037	Philip D. Wyatt
D 284,049	Nathan et al.
2,495,109	F. Kramer
4,363,496	Charles P. Schreiner
4,387,810	Louis J. Crosslen

4,586,618	Timothy H. Norman
4,726,477	Larry Martin
5,582,302	Ira M. Kozak

Many of these proposals show some common elements. Thus, the Humphries, May, Tirlet and Arnould patents, and others show the basic concept of narrow tiers or shelves stacked vertically, to display goods to a potential customer. Many of the design patents also show similar features. Of interest, some patents, such as the Wyatt, and Nathan et al. patents show inclined shelving, so as to present better access to the goods, and possibly to encourage goods to slide down to the front of the shelves, when the shelves are only partly full. In such cases, it is common to provide a front ledge or lip to the shelf, to hold the goods in place.

A number of the utility patents address the issue of attaching containers to carts, frames and the like. Thus, the Schreiner patent shows a material handling cart with individual totes which rely on their own weight and the effects of gravity to retain them in position. They are retained by downwardly extending flanges that engage a crossbar or support rail. Similarly, in the Crosslen patent, merchandising support racks are held on a point of purchase display providing a so-called shingled effect. The racks are provided with an arrangement to engage traverse bars, so that they can hang and pivot. It is particularly concerned with displaying cigarette packages.

The Norman patent again relies on gravity and a flange arrangement to retain containers in position.

A common characteristic of known display racks is that it is assumed that the goods or merchandise must be completely supported underneath, and further where a sloping shelf is provided that some sort of edge or lip must be provided at a front, lower edge, to retain a product on the shelf or rack. Consequently, in such designs, it is common to provide some sort of side frame or gable supporting the

individual shelves or racks. Even if this is in the form of an open wire frame or the like, the overall effect is to enclose the product or merchandise on all sides, except for the front. In many cases, the display is then not very appealing, and a product is not that readily accessible to a consumer. Moreover, where a product comes in containers for display, the containers are often carefully designed with advertising information and the like on their exterior, which is often frequently hidden, or partially hidden by the framework of the display stand.

SUMMARY OF THE INVENTION

Accordingly, the present inventors have realised that what is desirable is to display a product in a manner which gives the appearance of being freestanding or floating, and which gives the sense that a container holding the product is unattached. They have realized that if this can be achieved, numerous advantages flow. The overall display is then more open making the product more accessible to a potential purchaser. Where containers are employed for holding the product, advertising and like material inside of the containers is then fully exposed and not in any way obstructed, making the display more attractive.

Accordingly, what is required is a display rack, or point of purchase display, which is simply robust, provides effective display of the goods, enables containers for the goods to be quickly and simply exchanged.

In accordance with one aspect of the present invention, there is provided a free standing display rack comprising: a supporting framework having a base portion for supporting the display rack on a substantially horizontal surface; and at least one container support integrally secured to the supporting framework and including a bottom portion, for supporting a container, and a downwardly-facing engagement means adapted to engage a rear wall of the container, whereby, in use, a container including a bottom wall and a rear wall is

supported on the container support bottom portion and the rearwall engages the engagement means.

The display rack includes a plurality of container supports which are vertically stacked above one another, and each of which is inclined forwardly and downwardly. Advantageously, each container support then comprises a bottom portion, a rear portion extending generally perpendicular thereto and a flange extending downwardly from the rear portion, the flange comprising the engagement means.

The supporting framework includes two side frames between which the container supports are secured. Each side frame includes a plurality of steps, each of which comprises a generally horizontal portion and an upwardly extending portion, which steps are substantially continuous with one another. More preferably, the side frames are secured to the container supports so as to project above the bottom portions of the container supports and to provide lateral support for the containers. Conveniently, the side frames are formed from an elongate element of substantially constant, circular cross-section, and the container supports are formed from sheet material.

The present invention also provides in combination, a display rack as just defined, and a plurality of containers each of which comprises a bottom wall, side walls, a front wall and a rear wall, with the rear wall of each container engaged with the flange of a container support. Each container can contain a plurality of individual packets of merchandise, for example a plurality of packets of mints, chewing gum or other candies. In a preferred embodiment, the length of each container is longer than an underlying container support, by an amount such that the weight of the container maintains its rear wall in engagement with the engagement means.

In accordance with a second aspect of the present invention, there is provided a display rack comprising: a supporting framework comprising a pair of spaced apart side frames; a plurality of

container supports integrally secured to the two side frames, each container support including a bottom portion, for supporting a container, and a downwardly-facing engagement means adapted to engage a rear wall of a container, whereby, in use, a container including a bottom wall and a rear wall is supported on the container support bottom portion and the rear wall engages the engagement means.

In accordance with a third aspect of the present invention, there is provided a display rack comprising: a supporting framework; and a plurality of container supports integrally secured to the supporting framework and each including a bottom portion, for supporting a container, and a downwardly and facing engagement means adapted to engage a rear wall of the container, whereby in use, a container including a bottom wall portion and a rear wall portion is supported on one of the container support bottom portions, with the rear wall thereof engaging the corresponding engagement means, and wherein the container supports are vertically stacked above one another and relatively close to one another, whereby supported containers are close to one another, and each container support is inclined forwardly and downwardly, whereby a forward portion of each container projects out below any container above the first-mentioned container, and articles within the containers will tend to slide towards the front thereof, whereby the articles are readily viewed and accessed.

In accordance with a further aspect of the present invention, there is provided a display rack comprising: a supporting framework formed from an enlongate element of substantially constant cross-section and a plurality of container supports secured to the supporting framework, each container support being formed from sheet material and including a bottom portion, for supporting a container, and a downwardly facing engagement means adapted to engage a rear wall of a container whereby, in use, a container including a bottom wall and a rear wall is supported on the container support bottom portion with the rear wall of the container engaging the engagement means.

BRIEF DESCRIPTION OF THE DRAWING FIGURES

For a better understanding of the present invention, and to show more clearly how it may be carried into effect, reference will now be made, by example, to the accompanying drawings in which:

Figure 1 is a perspective view of a display rack and a container in accordance with the present invention; and

Figure 2 is a side, sectional view of the display rack of Figure 1, indicating schematically the mounting of a container.

DESCRIPTION OF THE INVENTION

The display rack of the present invention is indicated generally by the reference 10. The display rack 10 has first and second side frames 12, 14. Each side frame 12, 14 is formed from coated wire and has a substantially uniform, circular cross section. The side frames 12, 14 are essentially identical and, for simplicity, are described in relation to the side frame 12. The side frame 12 shows a generally zig zag or sawtooth profile. The side frame 12 has a base portion 16, and extending from the forward end of the base portion 16, a rearwardly extending leg 18, the leg 18 extending rearwardly and upwardly.

Above the leg 18 there are three step or sawtooth portions 20 each of which comprises a horizontal portion 22 and an upwardly extending portion 24. Each upwardly extending portion 24 extends slightly forwardly. A cross bar 26, of smaller section than the side frames 12, 14, joins the frames 12, 14 together near the top.

Extending between the side frames 12, 14 are a number of elements formed from coated, sheet steel or the like. At the upper end of the rack, there is a mounting bracket 30 which comprises a vertical portion 32 and a pair of flanges 34, 35 facing towards one another, enabling bracket 30 to be slid onto a suitable vertical strip. The vertical portion 32 is also provided with apertures 36, to enable mounting or securing of the display rack 10 by means of screws or the like.

An upper attachment member 38 includes a vertical flange at one end secured, for example by welding, to the mounting bracket 30. At its forward edge, the sheet material of the upper attachment member 38 is folded back and it is welded or otherwise secured to the crossbar 26.

Now, in accordance with the present invention, to enable

the product to be displayed and mounted, the display rack 10 includes a plurality of container supports 40, here three container supports 40, which are generally identical with one another and which are welded at their side edges to the side frames 12, 14. Like the mounting bracket 30 and the upper attachment member 38, the container supports 40 are formed of sheet metal.

Each container support 40 comprises a bottom portion 42, a rear portion 44 and a downwardly extending flange 46. It can be noted that an additional angled attachment member 48 is provided between the mounting bracket 30 and the uppermost container support.

The container supports 40 are dimensioned to receive and mount containers 50. Here, each container 50 is a cardboard box, which is generally rectangular and is open at the top. For transportation purposes, in known manner, the containers 50 can be provided with upper closures, to pack the goods within them. Again, in known manner, the closures would be removed before mounting the containers for display. Alternatively, the containers could be packaged in a larger, box, which protects them, and eliminates the requirement for any separate closure.

Each box 50 has side walls 52, a front wall 53, a rear wall 54 and a bottom wall 55. The containers 50 are here shown containing individual packets of candies, for example mints or the like, indicated schematically at 56. It will be recognized that any suitable merchandise can be displayed using the rack of the present invention, and the rack would then be dimensioned accordingly.

Now, the bottom portions 42 of the container supports 40 have a length "L". The containers 50 in turn have a length indicated at "M". Here, the length "M" is more than twice the length "L", for reasons explained below. Additionally, the rear portions 44 of the supports 40 have a height corresponding to the height of the container rear walls 54.

In use, as shown in Figure 2, an upper edge of each

container rear wall 44 is engaged under the flange 46. The forward end of the container 50 is then permitted to swing downwards to bring the container 50 into abutment with the bottom and rear portions 42, 44.

The effect of the container length "M" being greater than the length "L" is to ensure, that at all times the centre of gravity of the container 50 and its contents lies forward of the front edge of the bottom portions 42. This ensures that the weight of the container 50 keeps its rear wall 54 into full engagement with the flange 46. Note that when the container 50 is full, its centre of gravity will be approximately at its mid-point. As product is purchased, i.e. as individual packets 56 are removed, the container 50 will be partially full, and at this point, the product will reside at the forward end of the container 50. Consequently, the effective load maintaining the rear wall 54 in engagement with the flange 46 is increased.

This arrangement has a number of advantages. The structure is relatively simple. Each container 50 is essentially just supported underneath by the bottom portion 42 and held at the upper edge of the rear wall 54. It can further be noted that this secures the container 50, even against disturbance by users removing the packets 56. A user reaching in for a packet 56 will, if anything, exert a simple downward load on the container 50.

The flange 46 has a width corresponding to the rear wall 54. Hence, it abuts against the insides of the side walls 52, to resist any movement tending to dislodge the container 50 sideways. In any event, the side frames 12, 14 are also dimensioned so as to abut at least partially against the sides of the container 50 to locate it laterally.

Another reason for having the container length M sufficiently greater than the length L is to provide sufficient clearance for the containers to be swung upwards, as shown for the uppermost container 50 in Figure 2, for mounting and removal of the containers 50. Where this clearance can be provided otherwise, e.g. by greater vertical spacing or setting the containers further back from one another

in an upward direction, or even by locating the container side by side in a row, then this length ratio is not critical. More importantly, it is not essential in the present invention for the center of gravity of the containers 50 to be forward of the container supports 40. Indeed, it is possible for the bottom portion 42 of each container support 40 to extend to near the front of a respective container 50.

Then, the weight of the container 50 is essentially taken by the bottom portion 42 of the container support 40. The flange 46 then serves to retain the container in position and stop it from sliding down the container support. This thus provides a clean, unobstructed support for the containers 50, leaving them open both at the front and at the sides. A product is then readily available to the consumer, and all advertising and other information on the sides of the containers 50 are readily available and not obstructed by any supporting framework.

It will be appreciated that while a preferred embodiment of the invention has been described, many variations are possible within the scope of the present invention. Thus, it is not essential for the side frames to be formed from wire and the other elements to be formed from sheet metal. The whole rack could be formed from pressed sheet steel or from wire, or alternatively the entire rack could be moulded from a plastic material or the like.

It will also be appreciated that the rack 10 is described above in relation to its normal configuration in use, either standing on a flat, horizontal surface, or mounted to a vertical wall or the like. The terms such as "horizontal", "vertical", "rearwardly", "upwardly", etc. should be construed accordingly.

THE EMBODIMENTS OF THE INVENTION IN WHICH AN EXCLUSIVE PROPERTY OR PRIVILEGE IS CLAIMED ARE DEFINED AS FOLLOWS:

1. A free standing display rack comprising:

a supporting framework having a base portion for supporting the display rack on a substantially horizontal surface; and

a plurality of container supports integrally secured to the supporting framework and including a bottom portion, for supporting a container, and a downwardly-facing engagement means adapted to engage a rear wall of the container, whereby, in use, the container including a bottom wall and a rear wall is supported on the container support bottom portion and the rear wall engages the engagement means;

wherein the container supports are vertically stacked above one another, and each container support is inclined forwardly and downwardly;

wherein the supporting framework includes two side frames between which the container supports are secured; and

wherein each side frame includes a plurality of steps, each of which comprises a generally horizontal portion and an upwardly extending portion, which steps are substantially continuous with one another.

2. A display rack as claimed in claim 1, wherein each container support comprises a bottom portion, a rear portion extending generally perpendicular thereto and a flange extending downwardly from the rear portion, the flange comprising the engagement means.

3. A display rack as claimed in claim 2, wherein the rear portion of each container support is attached to upwardly extending portions of respective steps of the side frames, with each rear portion and associated upwardly extending portions being inclined upwardly at substantially the same angle.

4. A display rack as claimed in claim 1, 2 or 3, including a mounting bracket, the mounting bracket being substantially vertical.

5. A display rack as claimed in claim 4, wherein the mounting bracket includes at least one of mounting flanges and apertures for mounting elements.

6. A display rack as claimed in claim 1, 2, 3, 4, or 5, wherein the side frames are secured to the container supports so as to project above the bottom portions of the container supports and to provide lateral support for the containers.

7. A display rack as claimed in claim 6, wherein the side frames are formed from an elongate element of substantially constant, circular cross-section, and wherein the container supports are formed from sheet material.

8. In combination, a display rack as claimed in claim 2, and a plurality of containers each of which comprises a bottom wall, side walls, a front wall and a rear wall, with the rear wall of each container engaged with the flange of one container support.

9. A combination as claimed in claim 8, wherein each container has a length sufficiently greater than the length of the container support supporting said container, whereby the weight of the container maintains the rear wall in engagement with the engagement means.

10. A combination as claimed in claim 8 or 9, wherein each container contains a plurality of individual packets of merchandise.

11. A display rack comprising:

a supporting framework comprising a pair of spaced apart side frames;

a plurality of container supports integrally secured to the two side frames, each container support including a bottom portion, for supporting a container, and a downwardly-facing engagement means adapted to engage a rear wall of a container, whereby, in use, a container including a bottom wall

and a rear wall is supported on the container support bottom portion and the rear wall engages the engagement means;

wherein each side frame includes a plurality of steps, each of which comprises a generally horizontal portion and an upwardly extending portion, which steps are substantially continuous with one another, and wherein the side frames are formed from an elongate element of substantially constant cross-section, and wherein the container supports are formed from sheet material.

12. A display rack as claimed in claim 11, which includes plurality of container supports which are vertically stacked above one another, and each of which is inclined forwardly and downwardly.

13. A display rack as claimed in claim 12, wherein each container support comprises a bottom portion, a rear portion extending generally perpendicular thereto and a flange extending downwardly from the rear portion, the flange comprising the engagement means.

14. A display rack as claimed in claim 11, 12 or 13, wherein the elongate element has a substantially constant, circular cross-section.

15. A display rack comprising:

a supporting framework comprising a pair of spaced apart side frames; and

a plurality of container supports integrally secured to the side frames and each including a bottom portion, for supporting a container, and a downwardly facing engagement means adapted to engage a rear wall of the container, whereby in use, a container including a bottom wall portion and a rear wall portion is supported on one of the container support bottom portions, with the rear wall thereof engaging the corresponding engagement means;

wherein the container supports are vertically stacked above one another and relatively close to one another, whereby supported containers are close to one another, and each container support is inclined forwardly and

downwardly, whereby a forward portion of each container projects out below any container above the first-mentioned container, and articles within the containers will tend to slide towards the front thereof, whereby the articles are readily viewed and accessed; and

wherein each side frame includes a plurality of steps, each of which comprises a generally horizontal portion and an upwardly extending portion, which steps are substantially continuous with one another, and wherein the side frames are formed from an elongate element of substantially constant cross-section, and wherein the container supports are formed from sheet material.

16. A display rack as claimed in claim 15, wherein each of the side frames comprises an elongate element that has a substantially constant, circular cross-section and each of the container supports is formed from a sheet material.

17. A display rack comprising:

a supporting framework formed from an elongate element of substantially constant cross-section and a plurality of container supports secured to the supporting framework, each container support being formed from sheet material and including a bottom portion, for supporting a container, and a downwardly facing engagement means adapted to engage a rear wall of a container whereby, in use, a container including a bottom wall and a rear wall is supported on the container support bottom portion with the rear wall of the container engaging the engagement means;

wherein the supporting frame work comprises a pair of side frames each formed from an elongate element of substantially constant cross-section, with the container supports extending between the side frames; and

wherein the side frames include portions extending adjacent the bottom portions of the container supports and extending above said bottom portions, to provide lateral support for the containers.

18. A display rack as claimed in claim 17, wherein each of the side frames is formed from an elongate element of substantially circular cross-section.

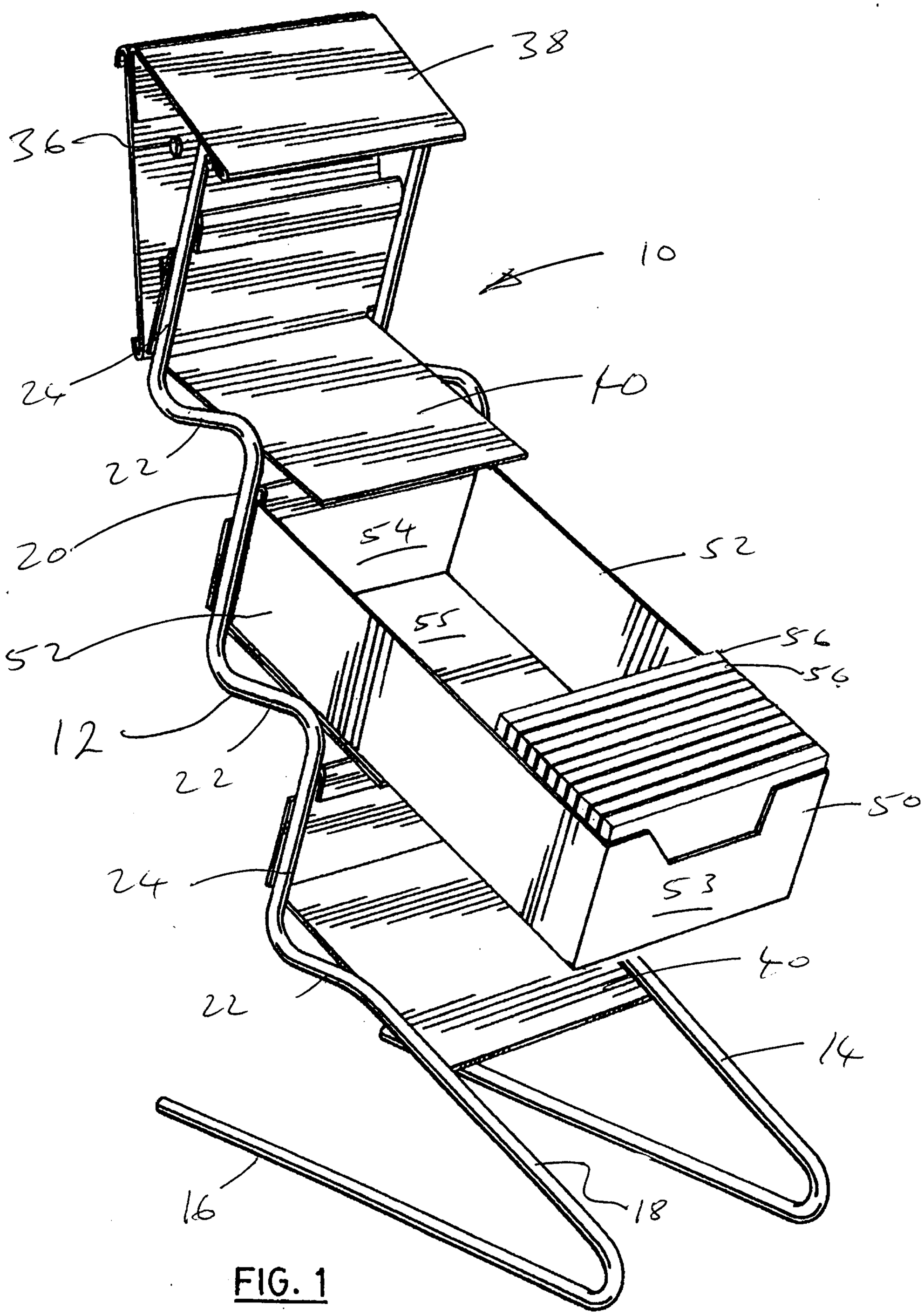

FIG. 1

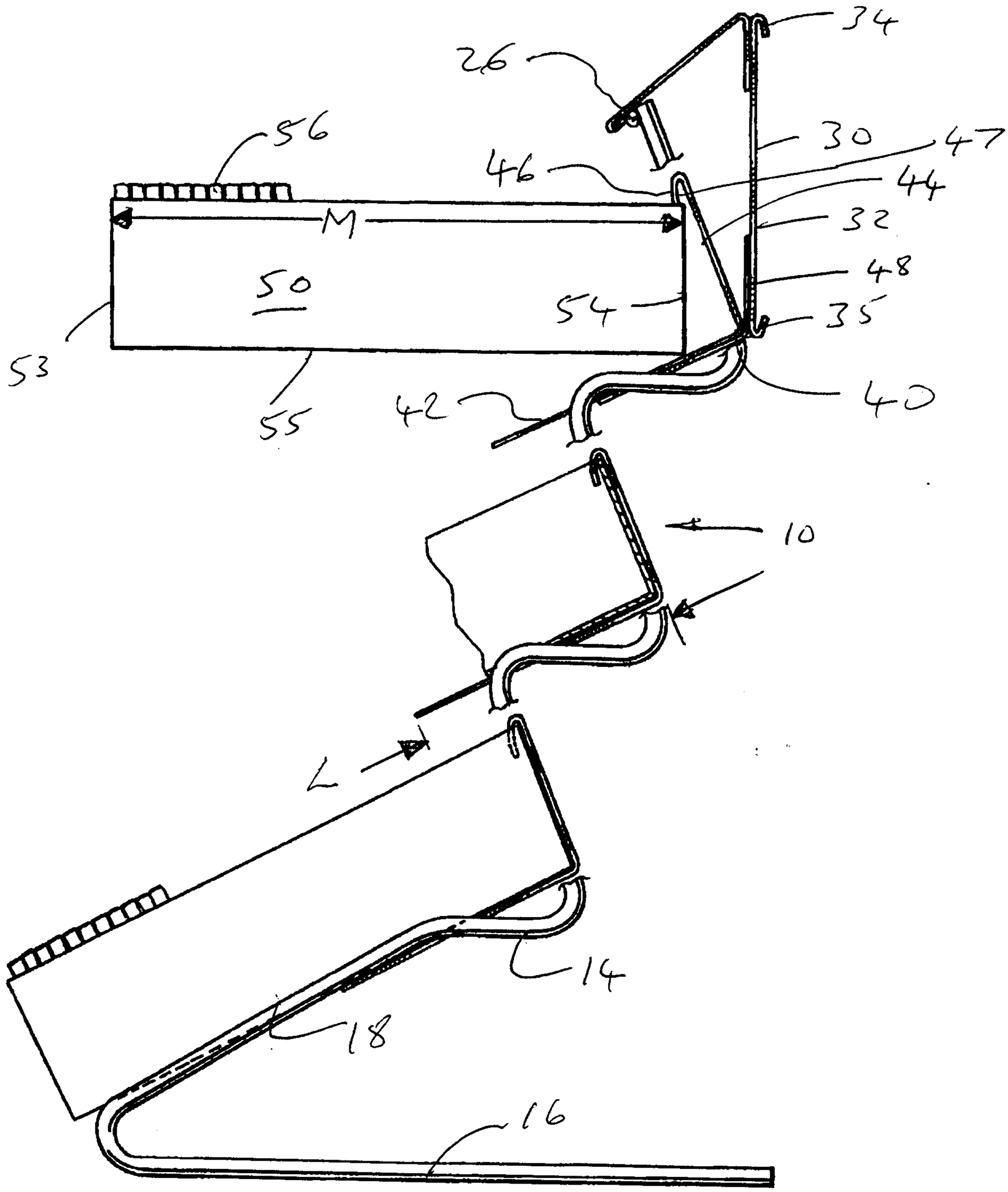

FIG. 2

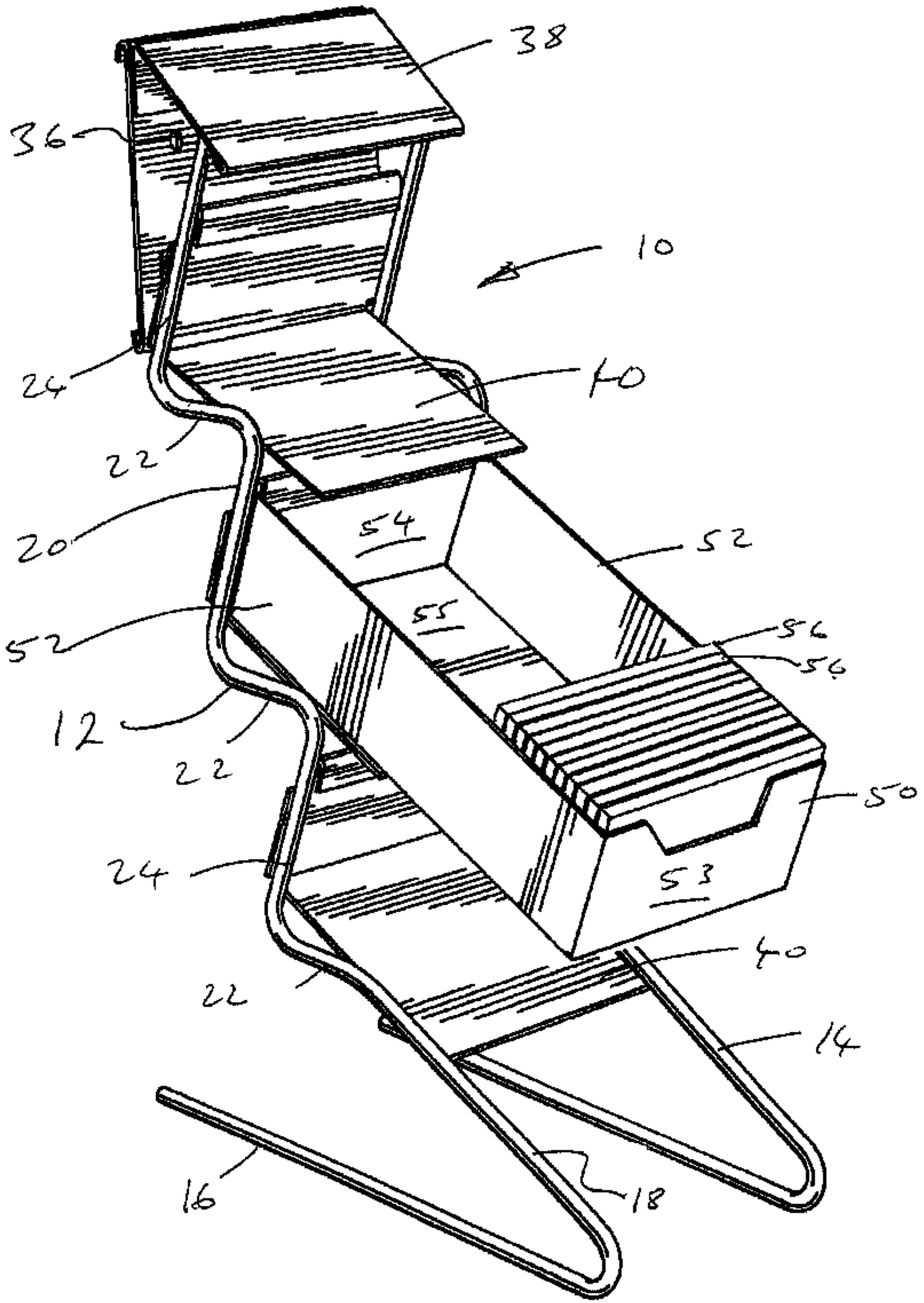
38
36
10
24
40
22
20
54
52
52
55
56
56
12
22
50
24
53
40
22
14
16
18