No. 735,085. PATENTED AUG. 4, 1903.

W. C. GILBERT.

AUTOMATIC FEEDING DEVICE FOR SHEETS OF STOCK.

APPLICATION FILED MAY 4, 1903.

NO MODEL. 2 SHEETS—SHEET 1.

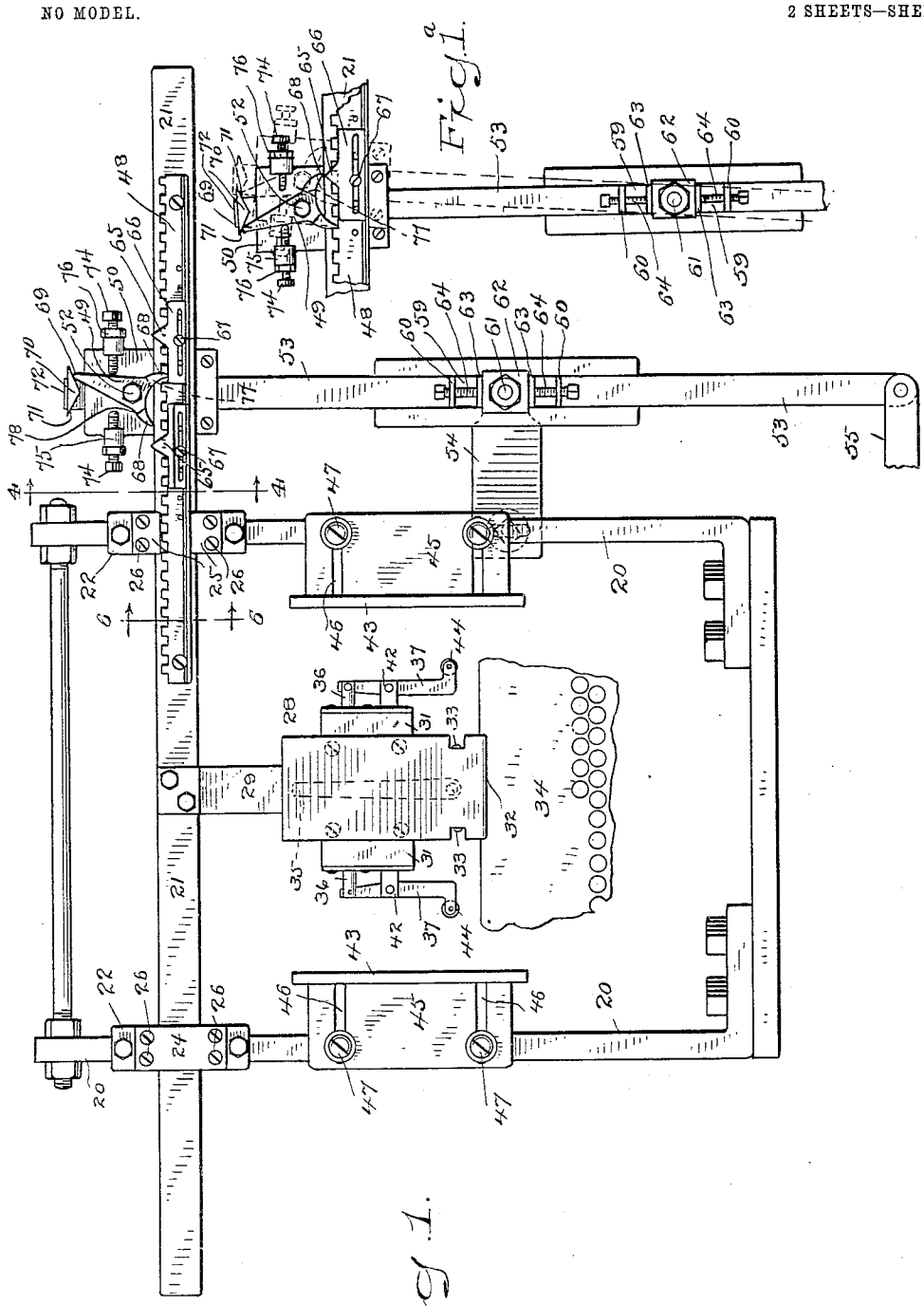

Fig. 1.

WITNESSES.

H. A. Lamb.

S. W. Atherton.

INVENTOR.

Walter C. Gilbert

By A. M. Wooster

Atty.

THE NORRIS PETERS CO., PHOTO-LITHO., WASHINGTON, D. C.

No. 735,085. PATENTED AUG. 4, 1903.

W. C. GILBERT.

AUTOMATIC FEEDING DEVICE FOR SHEETS OF STOCK.

APPLICATION FILED MAY 4, 1903.

NO MODEL. 2 SHEETS—SHEET 2.

Fig. 2.

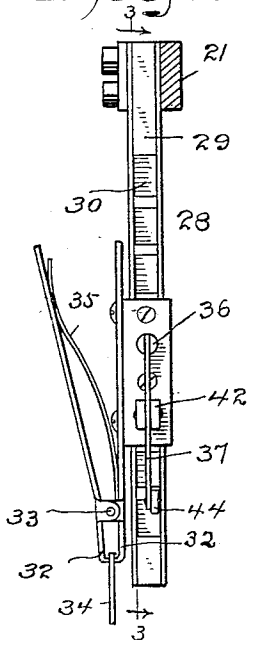

Fig. 3.

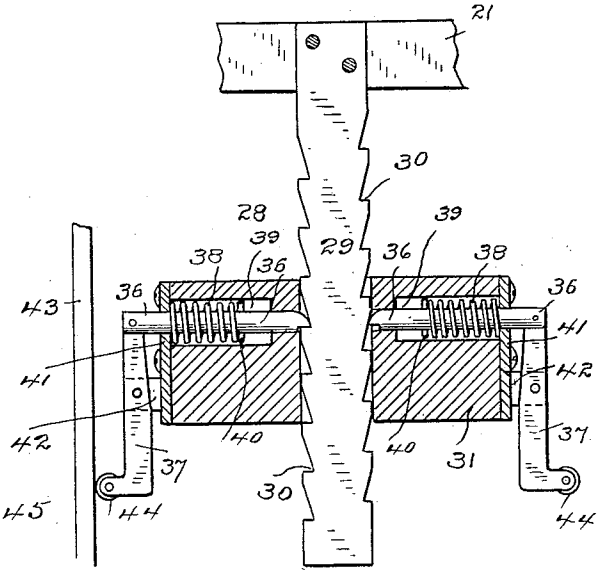

Fig. 4.

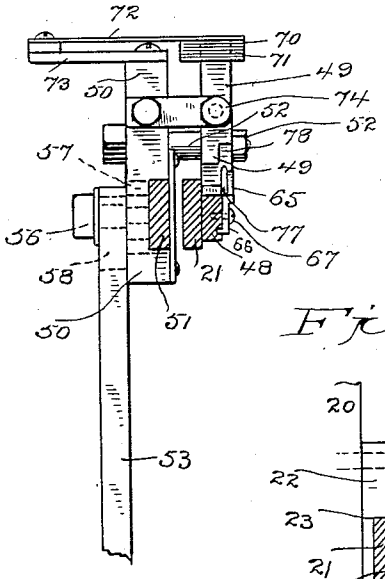

Fig. 5.

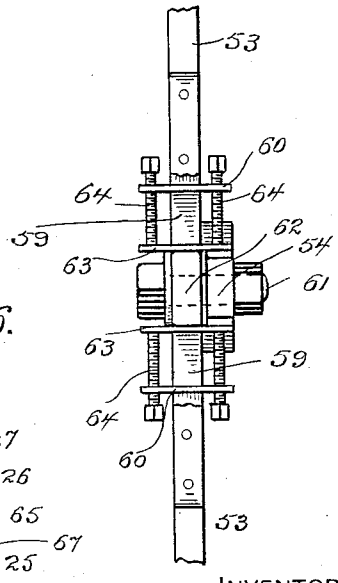

Fig. 6.

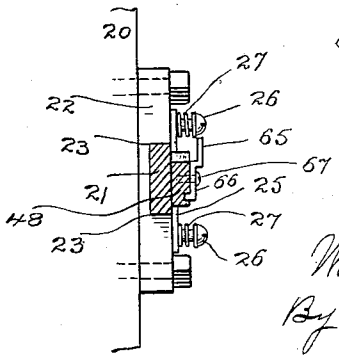

WITNESSES.

H. A. Lamb.

S. W. Atherton

INVENTOR.

Walter C. Gilbert

By A. M. Wooster

Atty.

THE NORRIS PETERS CO., PHOTO-LITHO., WASHINGTON, D. C.

No. 735,085. Patented August 4, 1903.

UNITED STATES PATENT OFFICE.

WALTER C. GILBERT, OF DERBY, CONNECTICUT, ASSIGNOR TO THE GRIFFIN BUTTON CO., INCORPORATED, OF SHELTON, CONNECTICUT, A CORPORATION OF CONNECTICUT.

AUTOMATIC FEEDING DEVICE FOR SHEETS OF STOCK.

SPECIFICATION forming part of Letters Patent No. 735,085, dated August 4, 1903.

Application filed May 4, 1903. Serial No. 155,495. (No model.)

To all whom it may concern:

Be it known that I, WALTER C. GILBERT, a citizen of the United States, residing at Derby, county of New Haven, State of Connecticut, have invented a new and useful Automatic Feeding Device for Sheets of Stock, of which the following is a specification.

My invention has for its object to provide an automatic feeding device adapted for general use, and especially adapted to feed sheets of stock to be operated upon by automatic machinery—as, for example, in feeding sheets of stock to an automatic button-lathe, in which it is required that the sheet of stock be fed forward and backward just the required distance at each movement to enable a blank to be cut therefrom without unnecessary loss of stock, that at the end of each row of blanks the sheet of stock be lowered sufficiently to permit another row of blanks to be cut therefrom without unnecessary loss of stock, and that the feeding mechanism be shifted, so as to feed the sheet of stock in the opposite direction.

With these ends in view I have devised the novel automatic feeding mechanism of which the following description, in connection with the accompanying drawings, is a specification, reference characters being used to indicate the several parts.

Figure 1 is an elevation of my novel device as in use, the position of the parts being at the mid-position of a feeding movement toward the right. Fig. 1ª is a detail view showing a position of the parts in which the feed-pawl has been shifted toward the left, the dotted position of the parts indicating the beginning and the full-line position the end of a feeding movement; Fig. 2, an end view, on an enlarged scale, of the stock-carrier, as seen from the right in Fig. 1, the feed-bar being in section; Fig. 3, a detail sectional view on the line 3 3 in Fig. 2, illustrating the operation of the vertical shifting mechanism; Fig. 4, a section of the feed-bar, rack, and the arm which carries the feed-pawl block on the line 4 4 in Fig. 1 looking toward the right, the feed-pawl block, feed-pawl, and feed-lever being in elevation; Fig. 5, a detail view showing in side elevation, partly broken away, the mid-length of the feed-lever and illustrating an adjustment of the feed-lever; and Fig. 6 is a section of the feed-bar and rack on the line 6 6 in Fig. 1 looking toward the right, one of the guide-blocks being in elevation.

20 denotes a frame of any ordinary or preferred construction which in use is rigidly secured in place, and 21 a feed-bar which is adapted to reciprocate transversely in recesses 23 in guide-blocks 22, themselves rigidly secured to the frame. The feed-bar is retained in the recess in the left guide-block, as seen in Fig. 1, by a plate 24 and is retained in the recess in the right guide-block by upper and lower plates 25. In order to provide a frictional resistance to the free movement of the feed-bar, so that it will remain in any position in which it may be placed, I make the recesses slightly shallower than the thickness of the bar and secure plates 24 and 25 to the blocks by means of screws 26, which carry coil-springs 27, the ends of which bear, respectively, against the plates and the under side of the heads of the screws, as clearly shown in Fig. 6. The friction of the plates upon the feed-bar may be increased or diminished by turning the screws in or out, thereby regulating the tension of the springs.

28 denotes the stock-carrier as a whole, which is vertically adjustable on a bar 29, which is rigidly secured to the feed-bar and depends therefrom and is provided on opposite sides with notches 30, whose lower walls are straight—that is, horizontal to the frame—and whose upper walls incline upward and outward, as clearly shown in Fig. 3. It will be noted that the notches on the opposite sides of bar 29 alternate, the lower wall of each notch being midway between the lower walls of notches on the opposite side of the bar, the purpose of which will presently be fully explained. The stock-carrier comprises a block 31, by which the gripping-jaws 32 are carried, these jaws being simply plates of metal, one of which is rigidly secured to the block and the other pivoted thereto, as at 33. The jaws are rigidly held in the gripping position, so as to grip a sheet of stock, (indicated by 34,)

by a spring 35, secured to one of the jaws and bearing against the other jaw.

The mechanism for shifting the sheet of stock vertically—that is, dropping it the required distance to cut another row of blanks after a row has been cut—comprises spring-controlled locking-bolts 36, socketed in the block, the inner ends of which are respectively adapted to engage the notches on the opposite sides of bar 29 and the outer ends of which are pivoted to levers 37. The locking-bolts are retained in the locking position by means of springs 38, lying in recesses 39 and inclosing the bolts, the ends of the springs bearing, respectively, against cross-pins 40 in the bolts and plates 41 at the ends of the block. These plates close the recesses, and the bolts pass through them. Levers 37 are pivoted to ears 42, which extend outward from the plates. The ends of the levers opposite to their connection with the locking-bolts are adapted to bear against adjustable stop-plates 43, antifriction-rollers 44 being provided at the ends of the levers to engage the plates. The stop-plates are shown as provided with angle-plates 45, having slots 46, through which screws 47 pass by which the plates are secured to the frame, said plates being adjustable in and out, for a purpose presently to be explained, by loosening the screws, moving the plates to the desired position, and then locking them there by tightening up the screws.

For convenience I will describe the operation of the vertical shifting mechanism before describing the operation of the feeding mechanism proper. It will of course be understood that bar 29, upon which the stock-carrier is vertically adjustable, moves horizontally with the feed-bar in either direction. The stock-carrier and piece of stock are supported on bar 29 by the engagement of one of the spring-bolts with the lower wall of one of the notches 30, as clearly shown at the left in Fig. 3, in which view the lever at the left has just come into engagement with the left stop-plate 43. The next actuation of the feeding mechanism, presently to be described, will carry the feed-bar, bar 29, and the stock-carrier still farther toward the left, the effect of which through the engagement of the lower end of the left lever 27 with the left stop-plate will be to disengage the left locking-bolt from the notch with which it is engaged, thereby permitting the stock-carrier and stock to drop downward until the movement is stopped by the engagement of the right locking-bolt with the lower wall of the next recess below on the right side of bar 29. As soon as the stock-carrier commences to move toward the right again and the left lever moves away from the left stop-plate the left locking-bolt will move into contact with the incline of the next notch below on the left side ready to engage the lower wall of said recess as soon as the right lever is tripped by engagement with the right stop-plate at the end of the movement of the feed-bar and stock-carrier toward the right. When a new piece of stock is placed between the gripping-jaws, the stock-carrier is raised on bar 29 high enough so that the blank-cutter, which is not illustrated, as it forms no portion of my present invention, will engage the lower portion of the sheet of stock, as clearly indicated in Fig. 1, and the feed-bar is moved far enough toward the right or left so that the cutting-tool will engage the right or left corner of the stock. In Fig. 1 the cutting of the lower row of blanks was commenced at the left corner, the movement of the piece of stock being toward the left, and the cutting of the second row of blanks commenced at the right corner of the piece of stock, the feed being toward the right. In starting with a new piece of stock stop-plates 43 are of course adjusted to correspond with the size of the piece of stock and so as to trip the levers and cause an automatic vertical adjustment of the piece of stock as soon as a row of blanks has been cut across, so that at the next operation of the cutting-tool (not shown) it will operate upon the stock above the row of holes that has just been completed.

48 denotes a rack which is rigidly secured to the feed-bar, and 49 a double-acting feed-pawl pivoted on a stud 52, extending from a block 50, which is adapted to slide on an arm 51, rigidly secured to and extending from the frame. Block 50 is reciprocated on arm 51 by means of a feed-lever 53, which has its fulcrum on a bracket 54, vertically adjustable on the frame in any suitable manner, as by means of a screw extending through a slot in the bracket. (See dotted lines, Fig. 1.) The lever is shown as oscillated to reciprocate block 50 by means of an operating-rod 55, which may be reciprocated in any convenient manner, the mode in which the machine is operated, however, being no part of my present invention.

56 denotes a bolt which connects the feed-lever to block 50. This bolt passes through a slot 58 in the lever (see dotted lines, Fig. 4) and engages either one of a plurality of holes in the block, (indicated by dotted lines and numeral 57.) The lever is provided at its mid-length with an enlargement in which is a longitudinal slot 59, at the upper and lower ends of which are cross-plates 60. The feed-lever has its fulcrum on a bolt 61, which passes through a block 62 lying in slot 59, said block oscillating on the bolt. At the upper and lower ends of the block are cross-plates 63, which are engaged by the ends of set-screws 64, which pass through threaded holes in plates 60. The purpose of this adjustment is to enable the operator to adjust the throw of the feed-lever in order to give more or less movement to the feed-bar in changing from one size of blanks to another. Should it be required to make larger blanks, stud 54 would be lowered on the frame, thereby increasing the movement of block 50,

and consequently of the feed-pawl, feed-bar, and stock-carrier, and increasing the distance from center to center of the blanks cut from the stock. Should the change be made to a smaller-sized blank, stud 54 would be raised on the frame, thereby lessening the movement of block 50, the feed-pawl, feed-bar, and stock-carrier, and consequently lessening the distance from center to center of the blanks. When bracket 54 is raised or lowered, block 62 is correspondingly adjusted in slot 59 by means of set-screws 64.

The automatic reversal of the feed-pawl, whereby the feed-bar, stock-carrier, &c., are caused to move in the opposite direction at the completion of each row of blanks, is effected by means of adjustable shifting-lugs 65. These lugs are shown as carried by plates 66, which are secured to the rack by means of screws 67, passing through slots in the plates, a series of holes being provided in the rack to receive screws 67, so as to provide for any amount of adjustment that can possibly be required. The feed-pawl is shown as made approximately triangular in outline, although this is of course not essential.

68 denotes the engaging points of the feed-pawl, and 69 the apex thereof, which is engaged and controlled by a block 70, provided on opposite sides with inclines 71 and carried by a spring 72, which is shown as secured to an arm 73, extending from block 50.

74 denotes set-screws against which the opposite sides of the feed-pawl bear and which serve as fulcrums therefor in use, as will be more fully explained. These set-screws are carried by arms 75, which extend from block 50, set-nuts 76 being provided to lock the set-screws in place after adjustment. In the present instance I have shown one of the engaging points 68—the left, as shown in Figs. 1 and 1ª—as partly cut away, as at 78, and the corresponding shifting-lug—the left, as shown in Figs. 1 and 1ª—as set forward, so that the left shifting-lug will clear the left engaging point of the feed-pawl. The other engaging point—the right, as shown in Figs. 1 and 1ª—is provided with a slot 77, which appears in Fig. 4 and is indicated by a dotted line in Fig. 1, and the right shifting-lug is located in a plane to permit it to pass through the slot, so that the right engaging point of the feed-pawl will clear the right shifting-lug.

The operation of the feed-pawl in moving the feed-bar in either direction and also the manner in which it is shifted will be readily understood from Figs. 1 and 1ª. In commencing upon a new piece of stock the shifting-lugs, as well as the stop-plates, must be adjusted to correspond with that special piece of stock, the stop-plates in order to effect the vertical adjustment at the completion of each row of blanks and the shifting-lugs in order to reverse the feed-pawl at the completion of each row of blanks. In feeding in either direction the forward engaging point of the feed-pawl passes the corresponding shifting-lug, and the feed-pawl is shifted or tripped by the engagement of its rear engaging point with the shifting-lug. In Fig. 1 the feed is toward the right, the parts being at the mid-position of a feeding movement. As already stated, the right engaging point is provided with a slot 77, and the right shifting-lug 65 is so positioned that it will pass through said slot without engaging the right point 68. As soon as the left engaging point, however, comes in contact with the right shifting-lug it will be engaged thereby, and the feed-pawl will be shifted from the position shown in Fig. 1 to the position shown in Fig. 1ª, spring 72 yielding and permitting the apex of the feed-pawl to ride down the right incline of block 70 and up the left incline of said block, as clearly shown. The operation is precisely the same at the other extreme of the feeding movement. The fact that the left engaging point of the feed-pawl is cut away and the left shifting-lug set forward permits the left engaging point to pass the left shifting-lug in the movement toward the left, the right engaging point, however, being engaged by the left shifting-lug and the feed-pawl thrown thereby from the position shown in Fig. 1ª to the position shown in Fig. 1. During the ordinary feeding movements in either direction the action of the spring-controlled block 70 is simply to bear upon one side of the apex of the feed-pawl and retain it in operative position. In feeding, a set-screw 74, the engagement of a point 68 with a tooth of the rack, and stud 52 correspond, respectively, with the fulcrum, the resistance, and the power of a lever of the third order, the movement of the rack and feed-bar toward the right being caused by the oscillation of the upper end of the feed-lever toward the right, and after the feed-pawl has been reversed the movement of the rack and feed-bar toward the left being caused by the oscillation of the upper end of the feed-lever toward the left.

Having thus described my invention, I claim—

1. In a device of the character described the combination with a feed-bar and a bar 29 depending therefrom and provided on opposite sides with alternating notches, of a stock-carrier through which bar 29 passes, bolts in opposite sides of the carrier adapted to engage notches alternately to lock the carrier, levers fulcrumed on the carrier and pivoted to the outer ends of the bolts and stop-plates adapted to be engaged by the respective levers, whereby the operative locking-bolt is disengaged from a notch and the carrier allowed to drop until the other locking-bolt engages the next notch below.

2. In a device of the character described the combination with a stock-carrier and mechanism for feeding it horizontally in either direction, of a locking mechanism in each side of the carrier and means for disengaging the

operative locking mechanism at the completion of a feeding movement in either direction, so that the stock-carrier is allowed to drop until the other locking mechanism engages.

3. In a device of the character described the combination with a stock-carrier and feeding mechanism therefor, of adjustable automatic mechanism for shifting the stock-carrier vertically at the end of a feeding movement in either direction.

4. In a device of the character described the combination with a feed-bar and a bar 29 depending therefrom and provided on opposite sides with alternating locking-notches, of a stock-carrier through which bar 29 passes, spring-actuated locking-bolts in the carrier adapted to engage notches on opposite sides of the bar alternately, levers fulcrumed on the carrier to which the outer ends of the locking-bolts are pivoted and stop-plates adapted to be engaged by the other arms of said levers, substantially as shown, for the purpose specified.

5. In a device of the character described the combination with a horizontally-moving feed-bar, of a stock-carrier, jaws upon said carrier for gripping a piece of stock and adjustable automatic shifting mechanism whereby the carrier is caused to drop a predetermined distance at the end of each horizontal movement in either direction.

6. In a device of the character described the combination with a feed-bar, mechanism for feeding said bar horizontally in either direction and a stock-carrier carried by the feed-bar, of alternately-acting locking mechanisms for the stock-carrier and adjustable stop-plates whereby at the completion of a feeding movement in either direction the operative locking mechanism is disengaged and the stock-carrier allowed to drop until the other locking mechanism engages.

7. In a device of the character described the combination with a feed-bar, a rack thereon and shifting-lugs in different vertical planes, of a double-acting feed-pawl and a reciprocating block to which it is pivoted, one of the engaging points of said feed-pawl being cut away and the other slotted to correspond with the planes of the shifting-lugs, so that the forward engaging point when feeding in either direction will pass the corresponding shifting-lug but the rear engaging point will engage said shifting-lug and be shifted thereby so as to feed in the opposite direction.

8. In a device of the character described the combination with a feed-bar, a rack thereon and shifting-lugs in different vertical planes, of a feed-pawl having two engaging points, one of which is slotted and the other cut away to correspond with the respective shifting-lugs, a reciprocating block by which the feed-pawl is carried, set-screws which are alternately engaged by the feed-pawl, for the purpose set forth, and a spring by which the feed-pawl is retained in operative position.

9. In a device of the character described the combination with a feed-bar, and a rack and shifting-lugs carried thereby, of a feed-pawl comprising two engaging points and an apex, a reciprocating block on which the feed-pawl is pivoted, set-screws alternately engaged by the feed-pawl, for the purpose set forth, and a spring-controlled block having inclines which alternately engage the apex of the feed-pawl, substantially as shown, for the purpose specified.

10. In a device of the character described the combination with a feed-bar, a rack carried thereby and shifting-lugs lying in different vertical planes and adjustably secured thereto, of a feed-pawl having two engaging points, one of which is slotted and the other cut away to correspond with the respective shifting-lugs, and an apex, a reciprocating block to which the feed-pawl is pivoted, set-screws alternately engaged by the feed-pawl, a block 70 having inclines alternately engaged by the apex of the feed-pawl and a spring by which said block is carried, each incline acting to retain the pawl in operative position until the apex is shifted to the other incline by the engagement of the rear engaging point when feeding in either direction with the corresponding shifting-lug.

11. In a device of the character described the combination with a rack, a feed-pawl and a block to which the latter is pivoted, of an arm upon which the block reciprocates, a feed-lever adjustably secured to the block and having a slot at its mid-length with cross-plates 60 at the ends thereof, a block in said slot having cross-plates 63, set-screws in cross-plates 60 which engage cross-plates 63, whereby the arms of the feed-lever may be adjusted and a stud on which the block is pivoted.

12. In a device of the character described the combination with a feed-bar, a rack, a double-acting feed-pawl, and shifting mechanism whereby the latter is reversed, of a frame having recesses to receive the feed-bar, plates whereby the feed-bar is retained in the recesses, screws passing through the plates and engaging the frames and springs on the screws which bear upon the plates to provide tension for the feed-bar, whereby it is retained in position after a feeding movement in either direction.

In testimony whereof I affix my signature in presence of two witnesses.

WALTER C. GILBERT.

Witnesses:
SMITH A. ABBOTT,
E. J. KEELER.