US00D334380S

United States Patent [19]

Henneberger

[11] Patent Number: Des. 334,380

[45] Date of Patent: ** Mar. 30, 1993

[54] **GUIDING TROUGH, 90° HORIZONTAL ELBOW FOR OPTICAL FIBERS**

[75] Inventor: **Roy Henneberger**, Eagan, Minn.

[73] Assignee: **ADC Telecommunications, Inc.**, Minneapolis, Minn.

[*] Notice: The portion of the term of this patent subsequent to Jul. 14, 2006 has been disclaimed.

[**] Term: **14 Years**

[21] Appl. No.: **387,892**

[22] Filed: **Jul. 31, 1989**

[52] **U.S. Cl.** **D13/155**

[58] **Field of Search** ..... D13/152,-155; D30/131; D23/267, 200, 393; D34/28; 248/49, 58, 68.1; 174/21 JS, 35 C, 48, 68.1, 68.3, 69, 72 A, 84 R, 101; 138/155, 156, 157, 177, DIG. 11; 350/96.16, 96.23, 96.3

[56] **References Cited**

U.S. PATENT DOCUMENTS

1,986,965	1/1935	Frank	174/68.3 X
1,992,574	2/1935	Jenkins	174/68.3 X
3,003,794	10/1961	Burley	174/68.3 X
3,351,699	11/1967	Merckle	174/68.3 X
3,485,937	12/1969	Caveney	174/101
4,864,082	9/1989	Ono et al.	174/101 X
4,891,471	1/1990	Ono et al.	174/68.3
4,951,716	8/1990	Tsunoda et al.	174/68.3 X

FOREIGN PATENT DOCUMENTS

2365902	4/1978	France	174/101
0819878	4/1981	U.S.S.R.	174/68.3
06333665	12/1949	United Kingdom	174/68.3
0807341	1/1959	United Kingdom	174/68.3
2156034	10/1985	United Kingdom	138/155

OTHER PUBLICATIONS

Ditel UPL-1000/UPT-1000/Corner Cable Guides brochure, ©1986.

Tyton, Product Data Bulletin, The Lightguide System.

Panduit Corp., Product Bulletin E-FOA-1, Fiber Optic Cable Accessories.

Primary Examiner—Wallace R. Burke

Assistant Examiner—Joel Sincavage

Attorney, Agent, or Firm—Merchant, Gould, Smith, Edell, Welter & Schmidt

[57] **CLAIM**

The ornamental design for a guiding trough, **90°** horizontal elbow for optical fibers, as shown and described.

DESCRIPTION

FIG. **1** is a top, front and right side perspective view of a guiding trough, **90°** horizontal elbow for optical fibers showing my new design;

FIG. **2** is a front elevational view thereof;

FIG. **3** is a rear elevational view thereof;

FIG. **4** is a top plan view thereof;

FIG. **5** is a bottom plan view thereof;

FIG. **6** is a right side elevational view thereof; and,

FIG. **7** is a left side elevational view thereof.

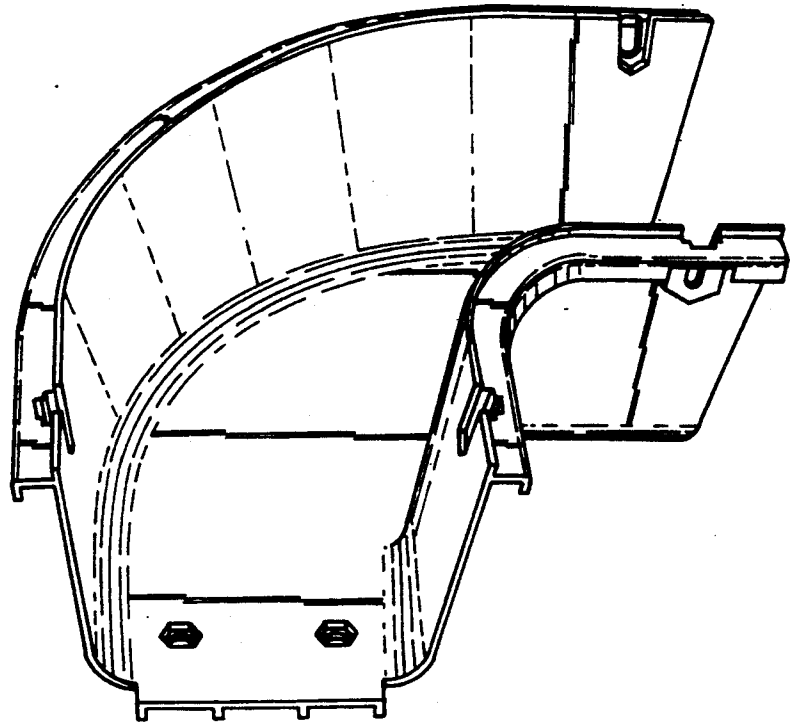

FIG.1

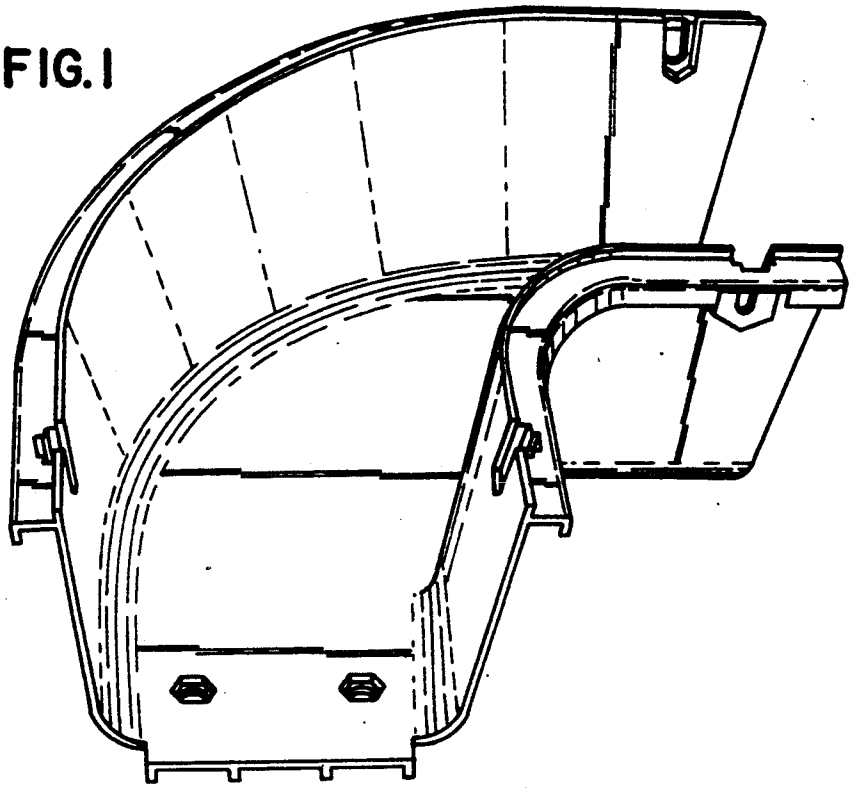

FIG.2

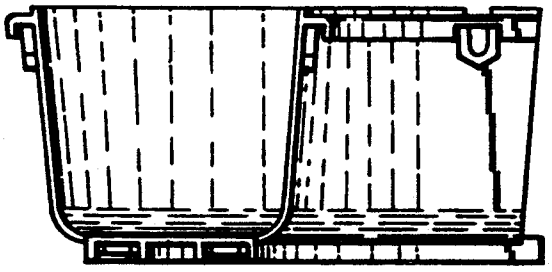

FIG.3

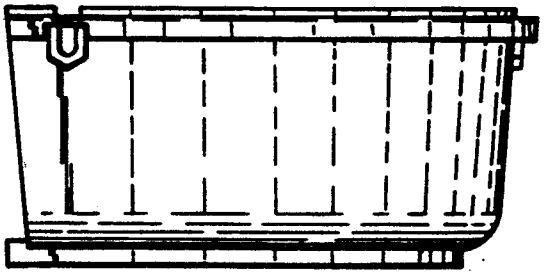

FIG.4

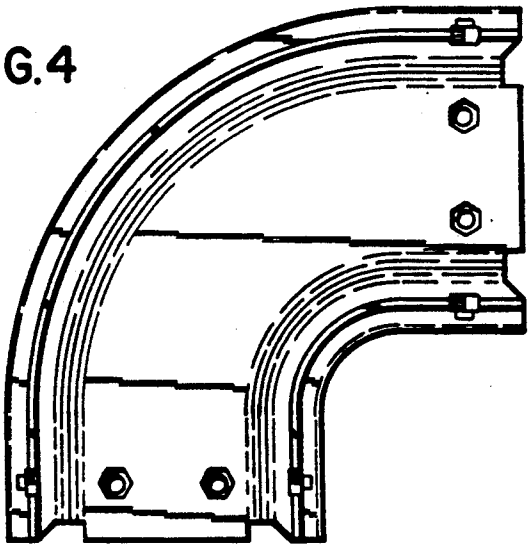

FIG.5

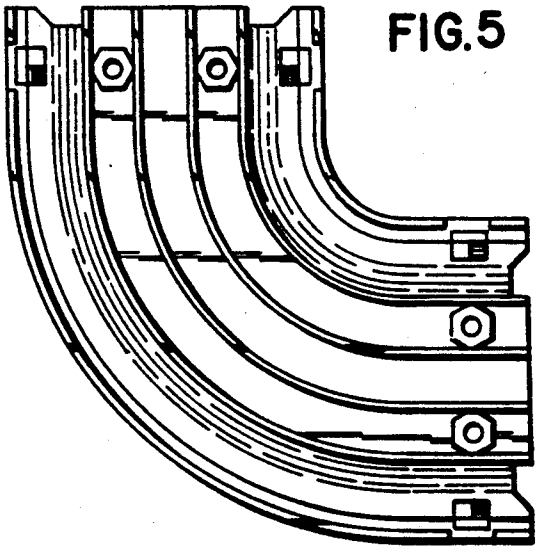

FIG.6

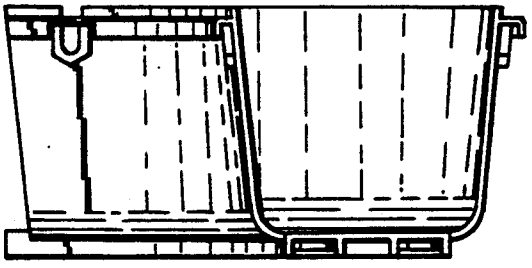

FIG.7

