US00D385855S

United States Patent [19]

Ronzani

[11] Patent Number: Des. 385,855

[45] Date of Patent: **Nov. 4, 1997

[54] **BODY-WORN, PORTABLE COMPUTER**

[75] Inventor: **Peter A. Ronzani**, Los Gatos, Calif.

[73] Assignee: **Xybernaut Corporation**, Fairfax, Va.

[**] Term: **14 Years**

[21] Appl. No.: **57,995**

[22] Filed: **Aug. 6, 1996**

[51] **LOC (6) Cl.** **14-02**

[52] **U.S. Cl.** **D14/100**; D14/114

[58] **Field of Search** D14/100, 106, D14/115, 116; D18/1, 7, 2; 178/18, 19; 235/462, 472, 470; 345/156, 168, 169, 172, 173; 341/22, 23; 364/708.1

[56] **References Cited**

U.S. PATENT DOCUMENTS

D. 335,661	5/1993	Shepard	D14/116
D. 342,245	12/1993	Krichever et al.	D14/116
4,954,817	9/1990	Levine	D14/114 X
5,191,197	3/1993	Metlitsky et al.	D14/116 X
5,340,972	8/1994	Sandor	D14/116 X

Primary Examiner—Freda Nunn
Attorney, Agent, or Firm—James J. Ralabate

[57] **CLAIM**

The ornamental design for a body-worn, portable computer, as shown and described.

DESCRIPTION

FIG. **1** is a top plan view of the body-worn, portable computer showing my new design;
FIG. **2** is a right side elevational view thereof;
FIG. **3** is a left side elevational view thereof;
FIG. **4** is a front elevational view thereof;
FIG. **5** is a back elevational view thereof;
FIG. **6** is a right side elevational view with the movable support of my new design down;
FIG. **7** is a left side elevational view with the movable support of my new design down; and,
FIG. **8** is a bottom elevational view of the body-worn, portable computer showing my new design.

1 Claim, 7 Drawing Sheets

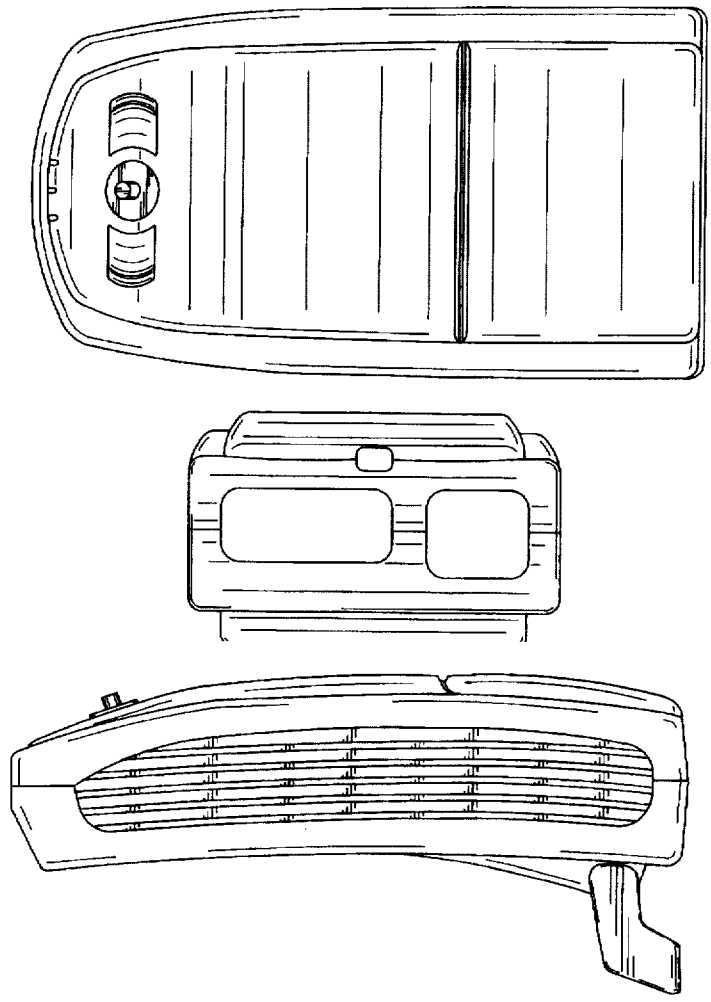

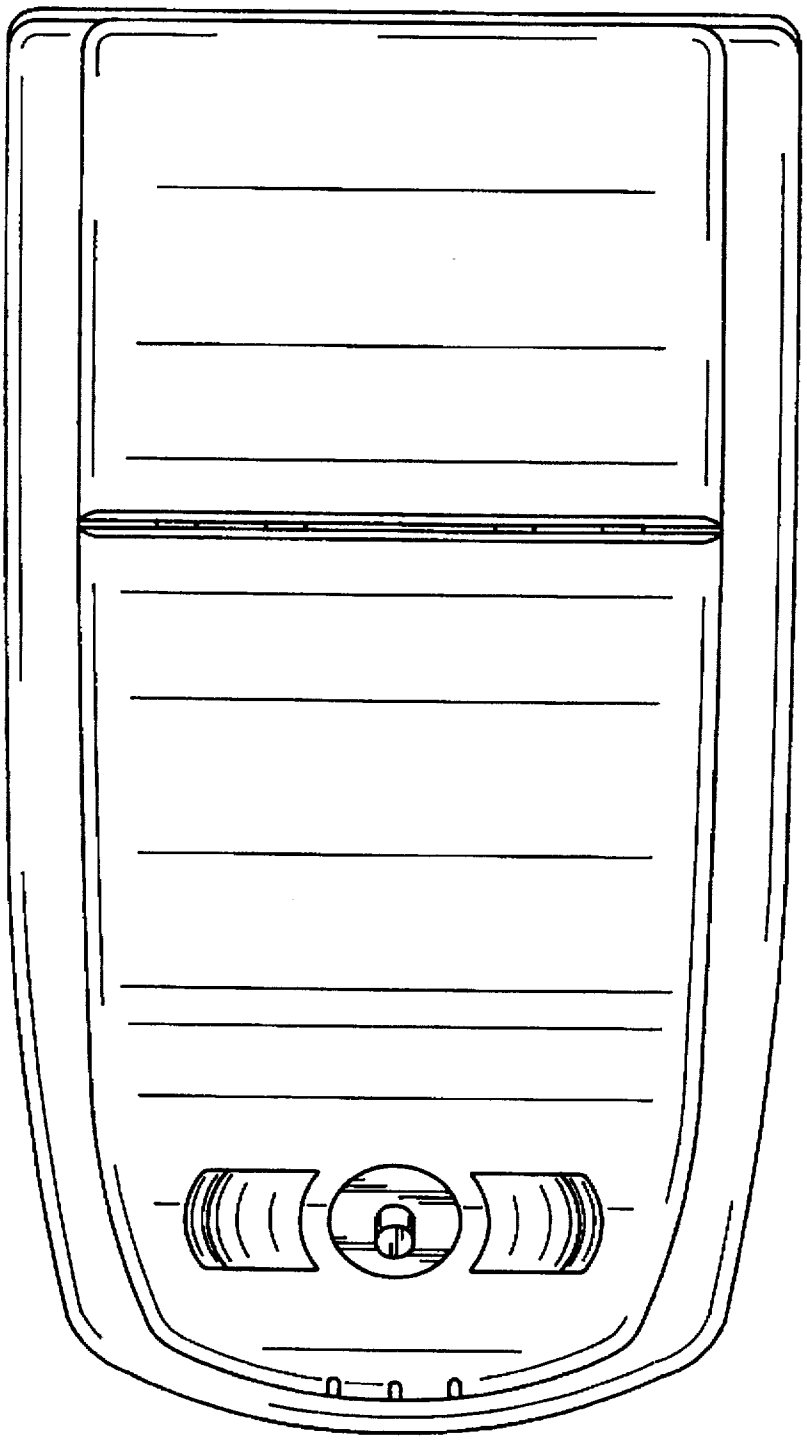

FIG. 1

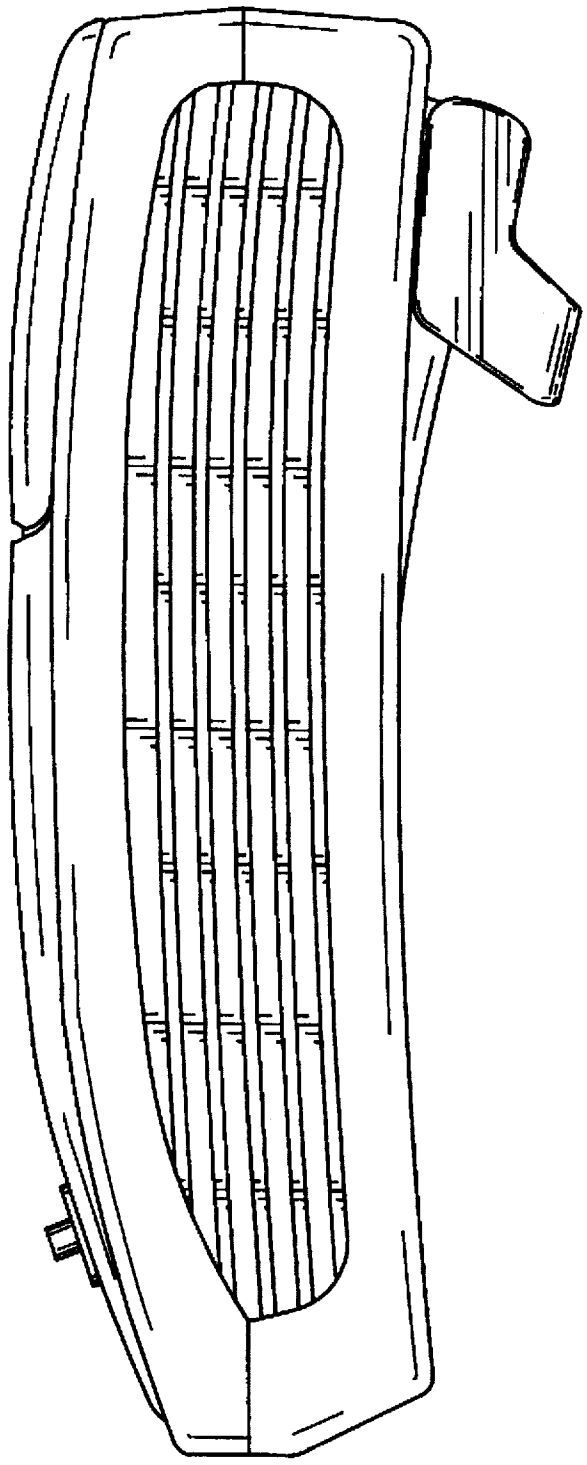

FIG. 2

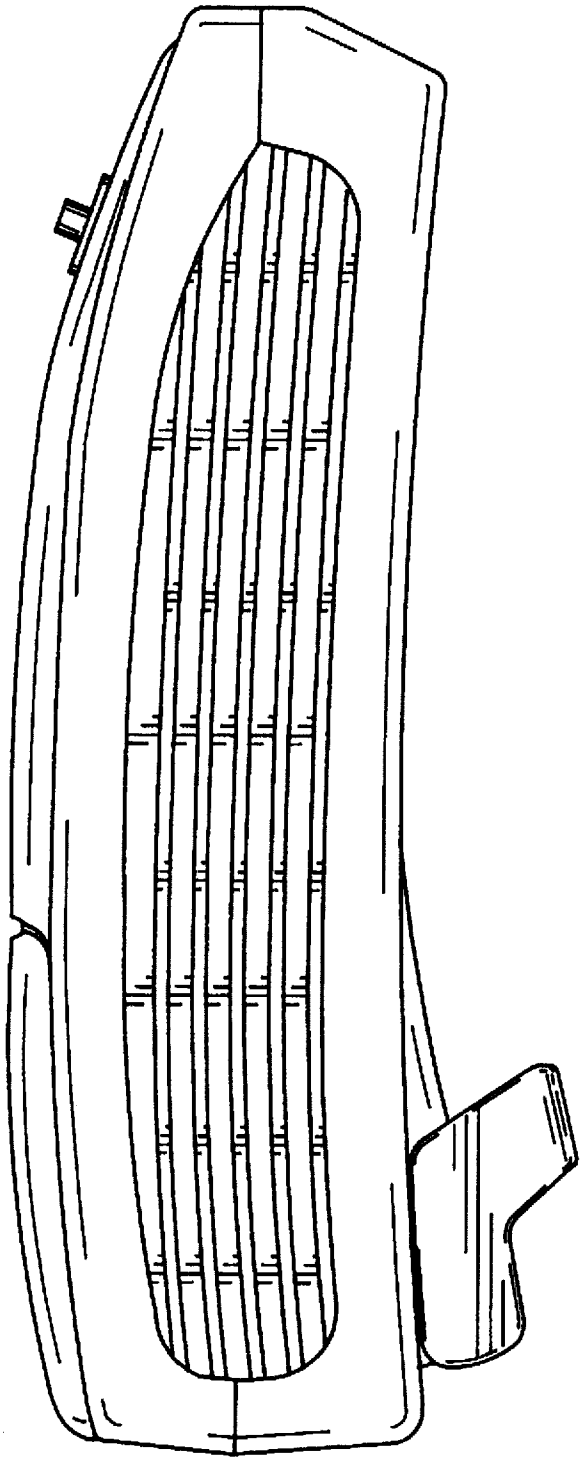

FIG. 3

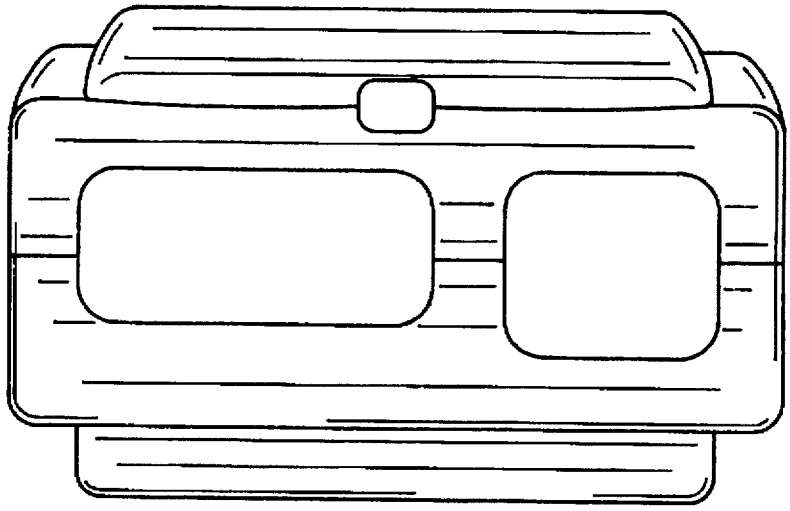

FIG. 4

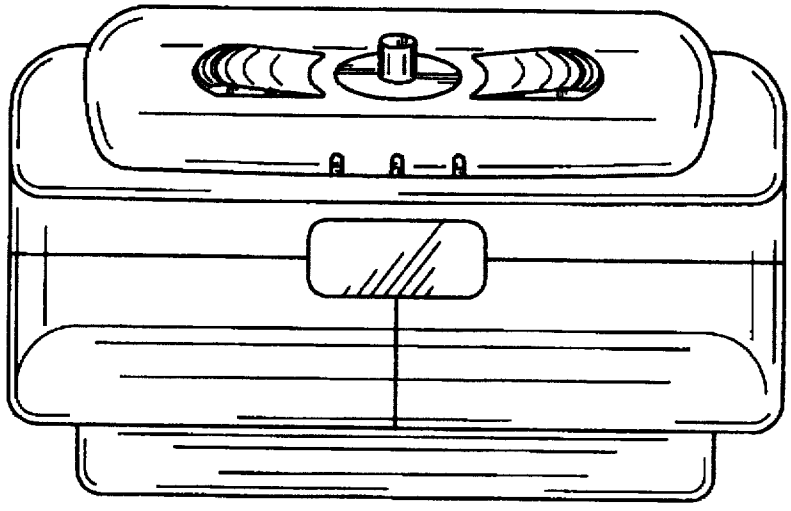

FIG. 5

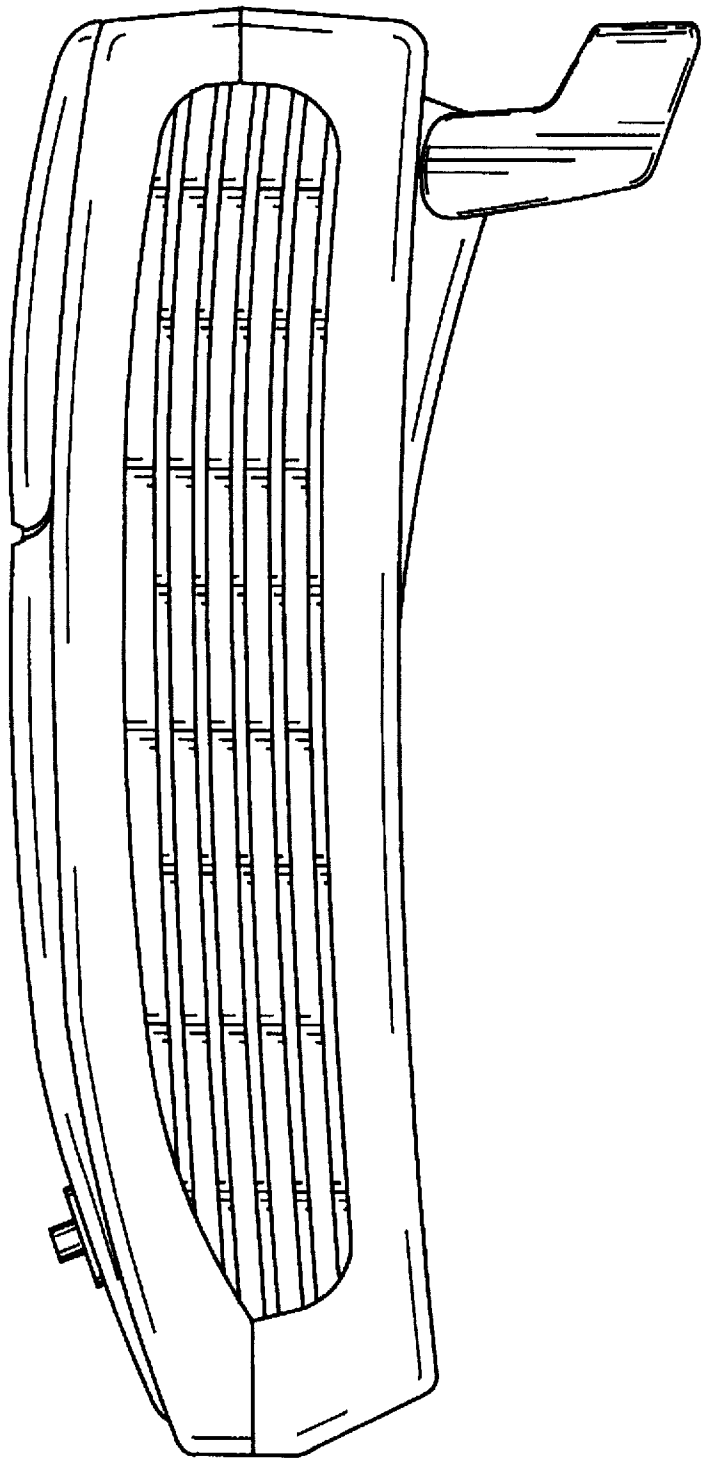

FIG. 6

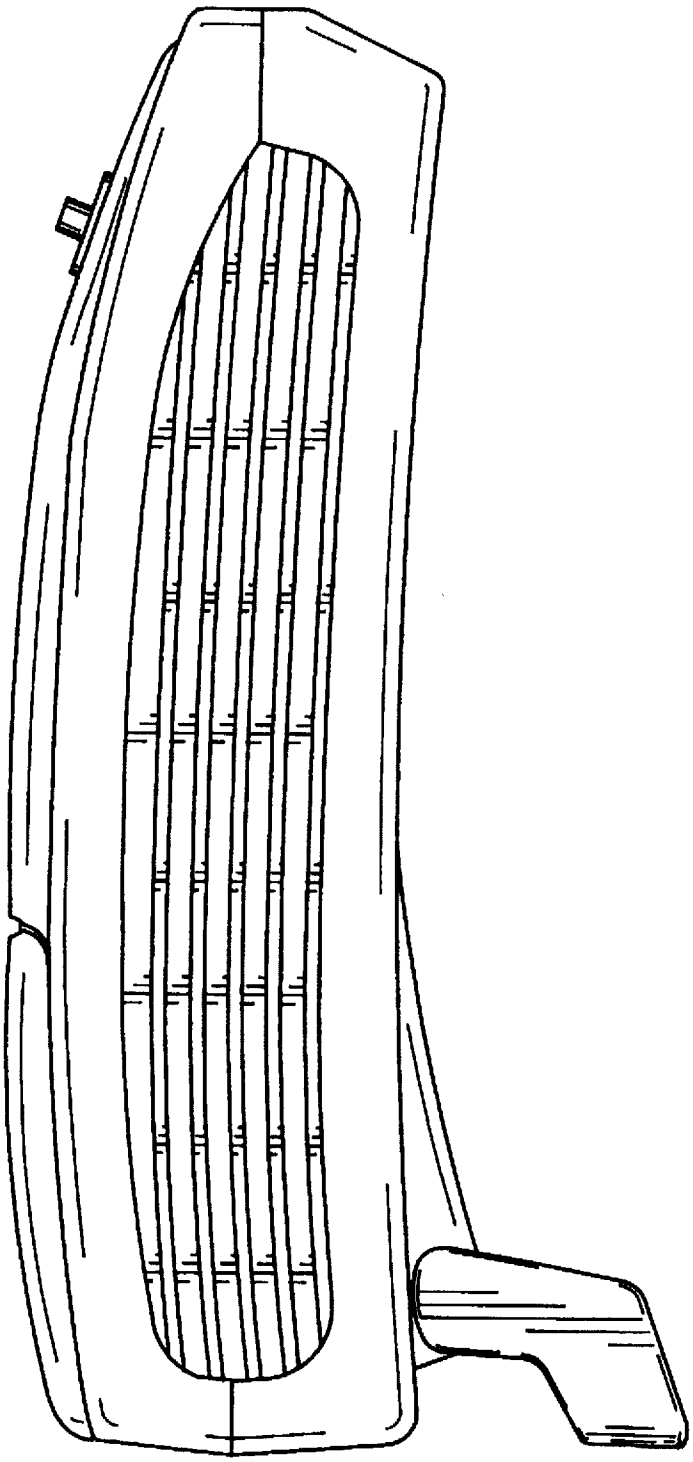

FIG. 7

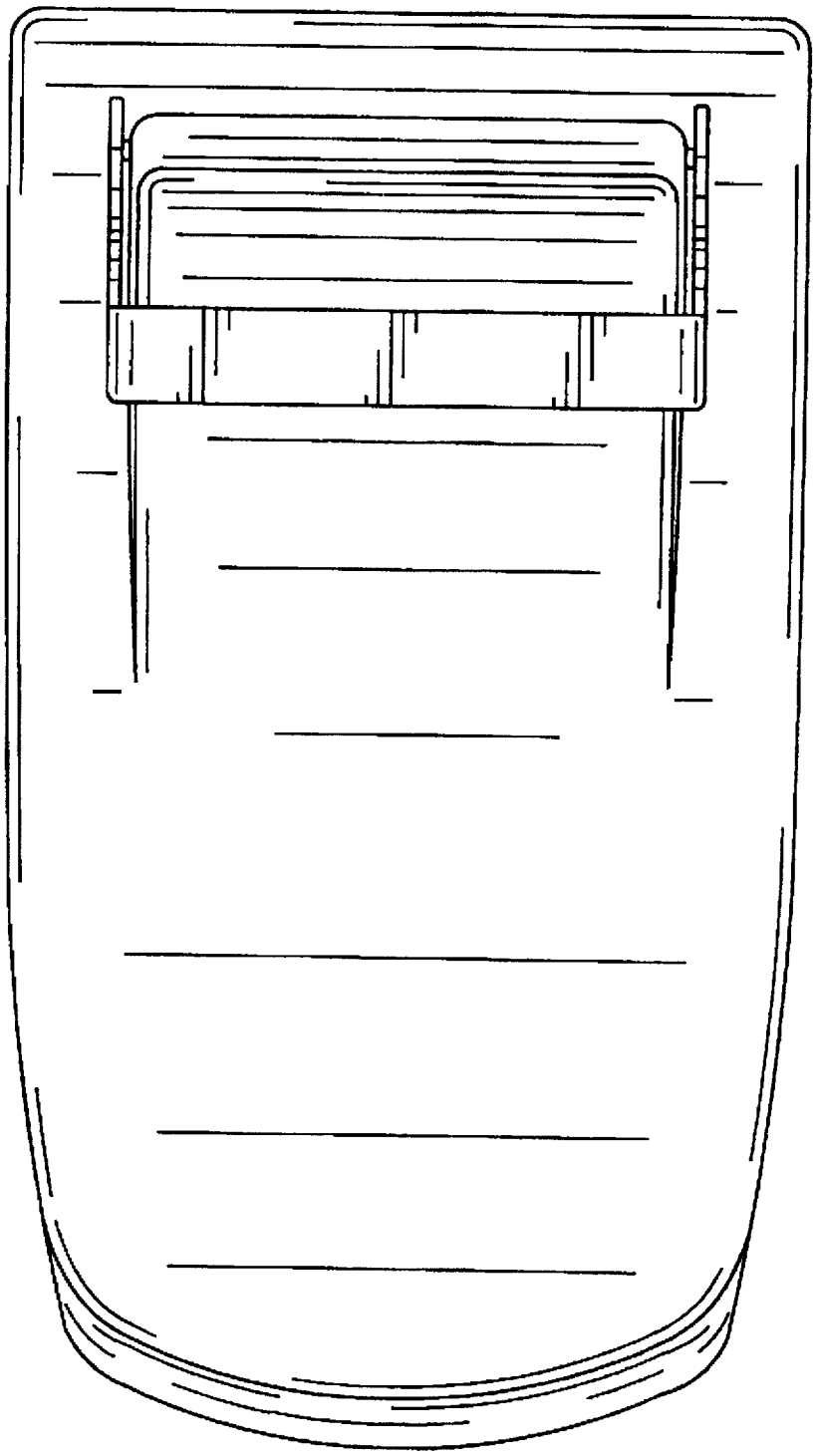

FIG. 8