Nov. 15, 1949 M. M. SHORE 2,488,516

TELEPHONE INDEX

Filed Nov. 28, 1945

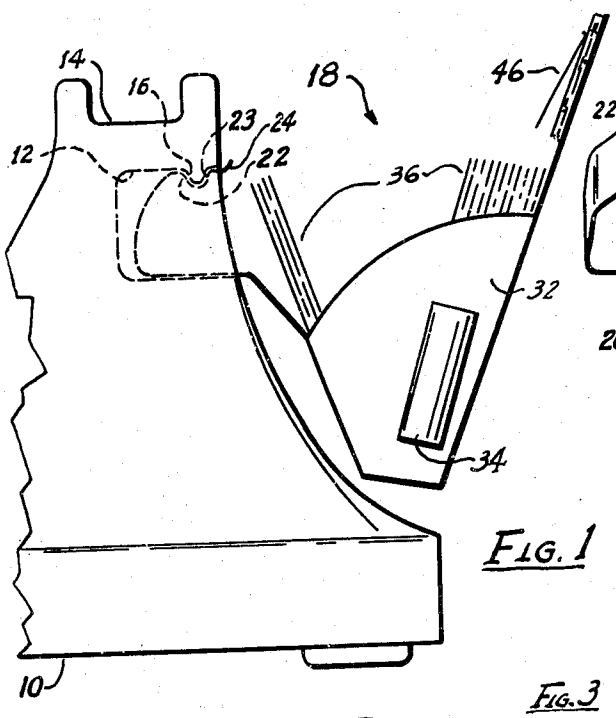

FIG. 1

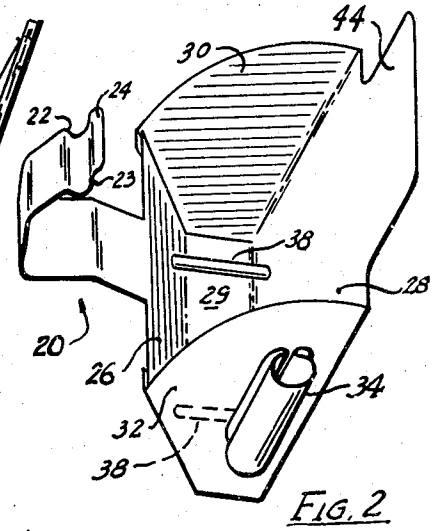

FIG. 2

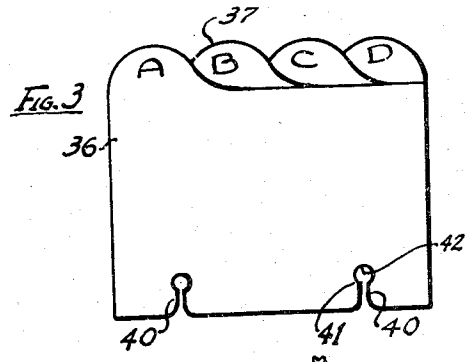

FIG. 3

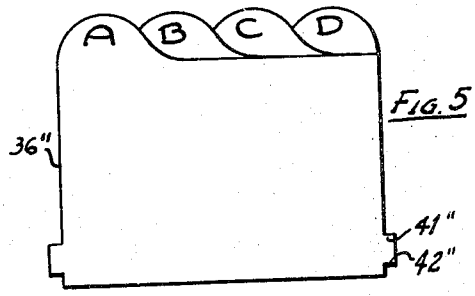

FIG. 5

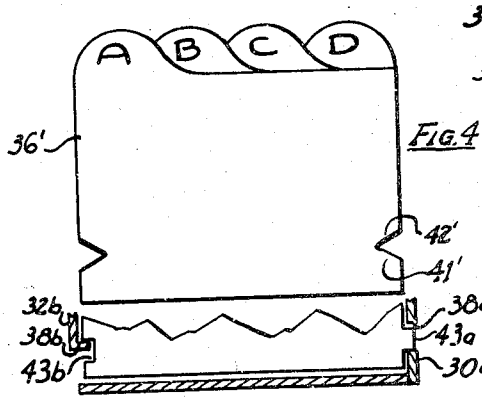

FIG. 4

FIG. 9

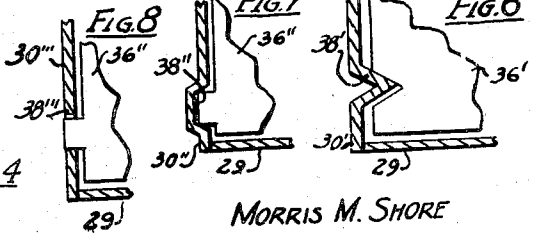

FIG. 8

FIG. 7

FIG. 6

MORRIS M. SHORE
INVENTOR.

BY Paul S. Martin
ATTY.

Patented Nov. 15, 1949 2,488,516

UNITED STATES PATENT OFFICE

2,488,516

TELEPHONE INDEX

Morris M. Shore, New York, N. Y.

Application November 28, 1945, Serial No. 631,437

5 Claims. (Cl. 40—10.5)

1

This invention relates to a telephone index, and in this aspect it is an improvement over that disclosed in my Patent No. 1,696,335, issued December 25, 1928. In a broader aspect, this invention relates to a card container and/or display attachment for a type of desk telephone.

The present "bell in base" telephone support is of such bulky design as to prevent its being embraced by hand for lifting as in previous models. Similarly, the instrument base is of such design as to preclude attachment of a card index or analogous device by means of an embracing clip or clamp.

An object of the present invention is to provide the currently modern desk telephone with a correctly oriented and effectively attached telephone index. A further object is to provide a readily viewed and readily manipulated telephone index or like display attachment which involves neither modification nor encumbrance of the "bell-in-base" manual or dial telephone set to which it is attached.

According to the present invention a card container, preferably having divergent front and rear walls, is provided with retaining means supporting cards for fore-and-aft separation. The container is carried at the rear of the base by a resilient strip formed generally complementary to a recess in the telephone base. The resilient strip is either of one piece with or firmly attached to the container.

Orientation of the card file at the rear of the telephone set effectively displays the card file without inhibiting customary manipulations of the telephone. The complementary spring arrangement, with the attachment carried by the lower spring portion, leaves the recess accessible for lifting the instrument. The pendant mass of the container and file cards promotes secure, rattle-free assembly of the device with the telephone base. Similar rattle-free results may be attained by so shaping the spring as to pre-bias the container against the telephone base. The unitary construction of the card-retainer and container promotes durability and easy insertion of the cards, and their removal individually for inscription. The sloping forward wall of the container is generally complementary to the rear surface of the telephone base, serving uniquely to support the forwardly inclined cards and to limit the bulk of the index and telephone assembly.

The invention, together with further objects and novel features of construction, will be apparent from the following detailed disclosure of a preferred embodiment thereof in which:

2

Fig. 1 represents a preferred form of index and display attachment assembled in relation to a known type of telephone base;

Fig. 2 is a perspective view of this form of attachment;

Fig. 3 is a view of one form of index card which may be utilized;

Figs. 4 and 5 are other forms of index cards for modifications of the preferred form of card container; and

Figs. 6–9 are fragmentary transverse sections of the side walls of modified card containers.

Referring now to Fig. 1, the telephone base 10 has a recess 12 near the channel 14 which supports the hand set (not shown). Recess 12 has a depending rib 16 which prevents the base from slipping off the fingers when the entire instrument is lifted.

The novel attachment in its preferred form includes a container and display portion 18 and a resilient strip or leaf spring 20 (Fig. 2) which may be integral with, or secured as by rivets to, portion 18. Leaf spring 20 is generally complementary to recess 12 so that the same, easy, finger engagement for lifting the assembly is available as for lifting the telephone base without the index. Portion 22 of the leaf spring follows the inner wall of rib 16 and portion 23 follows the outer wall of the rib, not only for this reason but also to constitute a firm, rattle-free interlock between the base and the attachment. Spring 20 has a tab 24 extending beyond recess 12. Depressing this tab eliminates the interlock and allows easy, deliberate removal of the attachment.

Receptacle 18 comprises a forwardly inclined front wall 26 conforming generally to the sloping rear surface of the instrument base. This wall is fixed to the lower part of spring 20. By virtue of this arrangement the weight of the receptacle tends to force portion 22 of the spring more firmly against rib 16. Portion 23 resists noisy bouncing of the assembly. The card container may be substantially spaced from the telephone base as shown, or it may be pressed firmly against the base by appropriate shaping of spring 20.

Integral with forwardly inclining front wall 26 are rearwardly inclining back wall 28, parts of which are bent to constitute a floor 29 for the container, and side walls 30 and 32. One of these walls (in the present embodiment) supports receptacle 34 for a writing instrument. Laterally spaced rods 38, which may be permanently secured to the container, constitute retainers for apertured index cards. These cards 36 have tabs 37 and narrow, spaced notches 40 formed as in

Fig. 3 so that card portions adjacent the notches may be flexed for individual card insertion and removal. The cards are prevented from spilling by engagement of shouldered portions 41 with rods 38.

As alternatives to rods 38, walls 30 and 32 may be provided with various forms of card retainers, as in-turned shoulders 38' in Fig. 6, or with channels 38'' in Fig. 7 or slots 38''' in Fig. 8, extending fore-and-aft of the container. Such modifications have certain advantages, enabling the use of more durable card shapes 36' and 36'' of Figs. 4 and 5, having shoulders 41' and 41''. All of the card edges may be supported largely free of the container by coaction of the card retainers with the respective portions 42, 42' and 42''. As a further alternative, the cards may have a projection 43a and a notch 43b (Fig. 9) at opposite edges, accordingly with a slot 38a and a shoulder 38b in opposite walls 30a and 32b of the container. By this expedient the cards may be cut from strip stock without producing waste. Rods 38, shoulders 38', and shoulder 38b may be generically termed "rails"; and these rails are provided to engage with notches 42 in the cards or with other notches as shown in Figs. 4, 6 and 9.

The rear wall 28 of container 18 in this embodiment extends upwardly to include panel portion 44 for a note pad or calendar 46 or other desirable display. The entire attachment may be of metal or it may be made wholly or partly of molded or formed plastics. It will be recognized that these and further modifications and alternatives are within the invention as defined in the appended claims.

What is claimed is:

1. A card file for a telephone base the rear surface of which telephone base is inclined downward to the rear, said card file comprising a container adapted to receive a set of index cards, said container having side walls and fixed upwardly divergent front and rear walls to expose a selected card to view between oppositely reclining cards, the slope of the front wall of the container being generally complementary to the rear surface of the telephone base, and a supporting spring clip extending forward of said front wall and having a shaped portion to conform with and lock to said telephone base, whereby said container is compactly carried to the rear of, and mainly below the top of, the telephone base.

2. A card file for a telephone base the rear surface of which telephone base is inclined downward to the rear, said card file comprising a container adapted to receive a set of index cards, said container having side walls and having fixed upwardly divergent front and rear walls to expose a selected card to view between oppositely reclining cards, said front wall being generally complementary in slope to the rear of the telephone base, and a supporting clip extending forward of said front wall and having a portion shaped to extend into a horizontally extending recess in the rear of the telephone base and to latch against a rib depending from the top wall of the recess.

3. A card file for a telephone base the rear surface of which telephone base inclines downward to the rear, said card file comprising a container adapted to receive a set of index cards and having internal card-retaining rails and

having side walls and fixed upwardly divergent front and rear walls to expose a selected card to view between oppositely reclining cards, the slope of said front wall being generally complementary to the rear of the telephone base, and a supporting spring clip extending forward of said front wall and including a roughly C-shaped portion with a rib across its top to enter a horizontally extending recess in the rear surface of the telephone base and latch to a rib depending therefrom, whereby said recess is freely available for digital engagement for moving said card container and the telephone base as a unit, and said container is compactly carried at the rear of and mainly below the top of the telephone base.

4. A card file for a telephone base the rear surface of which base inclines downward to the rear, said card file comprising a container having side walls, card-retaining rails extending inwardly from said side walls, a set of cards having notches in their lateral edges receiving said card-retaining rails, said container additionally including upwardly divergent front and rear walls to support oppositely reclining cards and thus expose a selected card to view, the slope and said front wall being generally complementary to the rear of the telephone base, and a supporting spring clip extending forward of said front wall and including a roughly C-shaped portion with a rib across its top to enter a horizontally extending recess in the rear surface of the telephone base and latch to a rib depending therefrom, whereby said recess is freely available for digital engagement for moving said card file and the telephone base as a unit, and said container is compactly carried at the rear of and mainly below the top of the telephone base when assembled therewith.

5. A card file for a telephone base the rear surface of which base inclines downward to the rear and near its top has a horizontally extending recess with a depending rib, said card file including a container adapted to receive a set of index cards, said container having side walls and fixed upwardly divergent front and rear walls to expose a card to view between oppositely reclining cards, and a supporting clip extending forward of said front wall and having a roughly C-shaped portion with an upward projection at the top thereof to be received and latch in the recess of the telephone base, whereby said container can be attached to the telephone base to be carried to the rear thereof and generally below the top thereof.

MORRIS M. SHORE.

REFERENCES CITED

The following references are of record in the file of this patent:

UNITED STATES PATENTS

Number	Name	Date
854,971	Thomas	May 28, 1907
892,170	Mahoney	June 30, 1908
1,200,591	Crary	Oct. 10, 1916
1,739,057	Bock	Dec. 10, 1929
1,966,742	Steinberg	July 17, 1934
2,240,325	Bruen	Apr. 29, 1941
2,320,838	Watson	June 1, 1943
2,271,140	Kelley	Jan. 27, 1942
2,297,442	Volk	Sept. 29, 1942
2,383,944	Saltz	Sept. 4, 1945
2,414,597	Higbee	Jan. 21, 1947