Sept. 13, 1932. A. HALL 1,876,921

RESISTANCE UNIT

Filed July 5, 1929

Fig. 1.

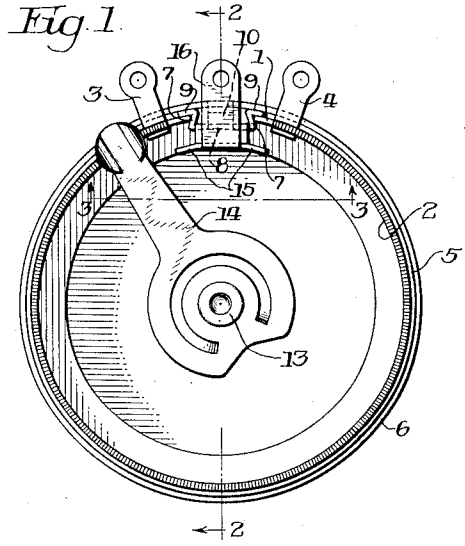

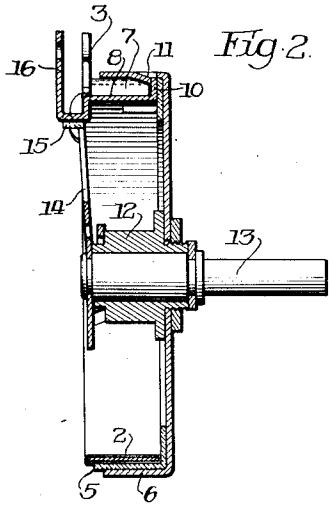

Fig. 2.

Fig. 3.

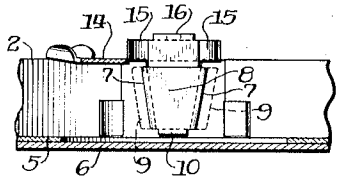

Fig. 4.

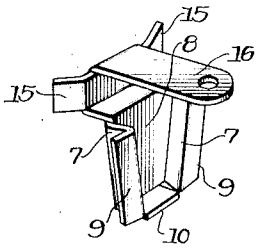

Inventor
Arthur Hall.

By G. L. Bragg Atty.

Patented Sept. 13, 1932 1,876,921

UNITED STATES PATENT OFFICE

ARTHUR HALL, OF OAK PARK, ILLINOIS, ASSIGNOR TO YAXLEY MANUFACTURING COMPANY, OF CHICAGO, ILLINOIS, A CORPORATION OF ILLINOIS

RESISTANCE UNIT

Application filed July 5, 1929. Serial No. 376,105.

My invention relates to resistance units which are held in engagement with surrounding walls of cups that contain the same. These units are usually in the form of wire wound about generally circular cores of insulation. When the structure is thus made the wire windings may be substantially coextensive with their cores, or not, as desired. In accordance with my invention such a resistance unit is in the form of a split ring with a spreading device operating upon the ends thereof in a circumferential direction to force the ring into engagement with the surrounding wall of the containing cup. In the preferred embodiment of the invention the ends of the ring are spaced apart in the circle of the ring and the spreading device is interposed between the facing or opposed edges of the ends of the ring. If the resistance unit is inclusive of a core, this core would be in the form of a nearly complete ring whose ends are spaced apart in the circle thereof. The interposed spreading device serves to expand the resistance unit in a circumferential direction or circularly to thereby force the resistance unit into holding engagement with the surrounding wall of the containing cup. The spreading device and the opposed ends of the resistance unit preferably have wedging action in which event the spreading device is desirably wedge-shaped and the edges of the opposed ends converge similarly to the convergence of the wedge. The cup, preferably the resistance surrounding wall thereof, and the spreading device have interengaging formations, whereby the device is locked in place to secure the holding adjustment of the resistance unit which the spreading device has effected.

I will explain my invention more fully by reference to the accompanying drawing in which Fig. 1 illustrates my invention as it is preferably embodied in a rheostat; Fig. 2 is a sectional view on line 2—2 of Fig. 1; Fig. 3 is a view on a part of the structure taken in the direction of arrow 3 of Fig. 1; and Fig. 4 is a perspective view of the preferred form of spreading device.

The resistance unit illustrated is inclusive of a ribbon or strip of thin insulation 1 forming a split ring and about which is wound the resistance 2 of wire, such ribbon thus constituting the core of the resistance. Terminals 3 and 4 are mechanically assembled with the resistance core and are electrically connected, respectively, with the ends of the resistance winding. A liner 5, also in the form of a strip or ribbon of insulation, encloses the resistance unit. This liner is also in the form of a split ring to permit of its expansion. The parts 1, 2 and 5 are disposed in a metallic cup, these parts being surrounded by the circular cup wall 6. The employment of metal in the formation of the cup makes the employment of the liner 5 desirable, but the invention is not to be limited to a metallic cup nor to the employment of such a liner. Where the liner and a cup of metal are employed, the liner is desirably continued along the bottom of the cup so as there also to insulate the resistance wire from the cup, Fig. 2. The ends of the core 1 are desirably spaced apart in the circle of the ring. A spreading device operates upon the ends of the core to expand this core circumferentially, that is, in a generally circular direction. Where the core ends are spaced apart in the circle of the core, the spreading device is preferably in the form of a wedging element having wedging portions 7 that converge toward the end wall of the cup and which engage the facing edges of the core ends that desirably converge similarly to said wedging portions 7. The wedging faces of the core ends and the wedging sides 7 are angular to the base of the cup. The spreading device is desirably formed of stamped metal in which event the parts 7 are connected by a web 8 which is surrounded in the circle of the resistance core, the wedging portion 7 desirably having wing extensions 9 which are at the outer circle of the core and are interposed between the core ends and the surrounding wall of the cup. The circular length of the resistance core 1 is such that when the wedge is finally disposed between the ends of the core, the core will be expanded in a circular direction to press it against the liner 5 and to press the liner 5 against the circular cup wall 6. The inner or base end of the spreading device is

desirably formed with an ear 10 which presses upon the spring tongue 11 that is punched out of the wall 6 as the spreading device is being placed in position. When the spreading device is in its final position, the ear 10 will clear the tongue 11 which will then lap such ear and hold it between the tongue and the base of the cup to prevent withdrawal of the spreading device.

When the invention is embodied in a rheostat the cup may be provided with a hub portion 12 in which the metallic shaft 13 of the rheostat may be journaled. This shaft may be provided with a suitable handle or knob, not shown, whereby it may be turned. The shaft carries a metallic contact arm 14 which rides upon the exposed end of the resistance winding. In the preferred embodiment of the invention the wire of the winding is coated with an insulation except where it is exposed for engagement by said arm. The spreading device is desirably provided with wing extensions 15 which limit the rotation of the arm to a path that is not quite a complete circle. For some purposes the spreading device may also be formed with a terminal extension. To guard against the disengagement of the resistance core 1 from the spreading device by inward radial movement of the ends of such core, I desirably also converge the faces of the wedging portions 7 of the spreading device outwardly toward the circular cup wall and tuck the core ends in the tapering receiving pockets thus provided. It is apparent that the device of my invention is simple in construction and easy to assemble.

Hitherto radially operating or expanding clamping devices have been surrounded by the resistance units to press these units against the surrounding cup walls in radial directions. These clamping devices of the prior art have usually been in the form of spiders having resilient spring arms pressing outwardly against the inner face of the resistance unit.

Changes may be made without departing from the invention.

Having thus described my invention, I claim:

1. The combination with an enclosing cup having a circular wall; of a generally circular resistance unit surrounded by the circular wall of the cup and having adjacent end portions; and a spreading device engaging said end portions and exerting expanding action upon the resistance unit in a circular direction to press the resistance unit against the circular cup wall to hold this resistance unit in assembly with the cup, wherein a spring tongue is formed on the circular wall of the cup and the spreading device is formed with an ear, said ear and tongue being constructed to permit the ear to lie between the tongue and the end wall of the cup to hold the spreading device in position.

2. The combination with an enclosing cup having a circular wall; of a generally circular resistance unit surrounded by the circular wall of the cup and having adjacent end portions; and a spreading device engaging said end portions and exerting expanding action upon the resistance unit in a circular direction to press the resistance unit against the circular cup wall to hold this resistance unit in assembly with the cup, wherein the resistance unit is in the form of a split ring with the ends of the ring spaced apart in the general circle of the ring, the spreading device being interposed between the ends of the unit and wherein a spring tongue is formed on the circular wall of the cup and the spreading device is formed with an ear, said ear and tongue being constructed to permit the ear to lie between the tongue and the end wall of the cup to hold the spreading device in position.

3. The combination with an enclosing cup having a circular wall; of a generally circular resistance unit surrounded by the circular wall of the cup and having adjacent end portions; and a spreading device engaging said end portions and exerting expanding action upon the resistance unit in a circular direction to press the resistance unit against the circular cup wall to hold this resistance unit in assembly with the cup, wherein the resistance unit is in the form of a split ring with the ends of the ring spaced apart in the general circle of the ring, the spreading device being interposed between the ends of the unit, and wherein the spreading device has wedging engagement with the ends of the unit and wherein a spring tongue is formed on the circular wall of the cup and the spreading device is formed with an ear adapted to ride upon this tongue during the positioning of the spreading device and which ear and tongue are constructed to permit the ear to lie between the tongue and the end wall of the cup to hold the spreading device in position.

In witness whereof, I hereunto subscribe my name.

ARTHUR HALL.