Sept. 27, 1955 A. THIBAUDAT 2,719,195

CIRCUIT BREAKER OPERATING SYSTEMS

Filed March 26, 1952

Fig 2

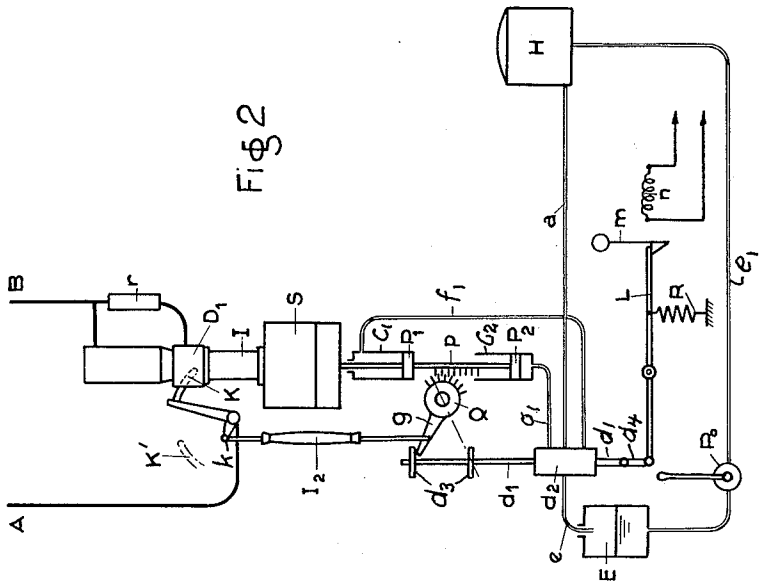

Fig 1

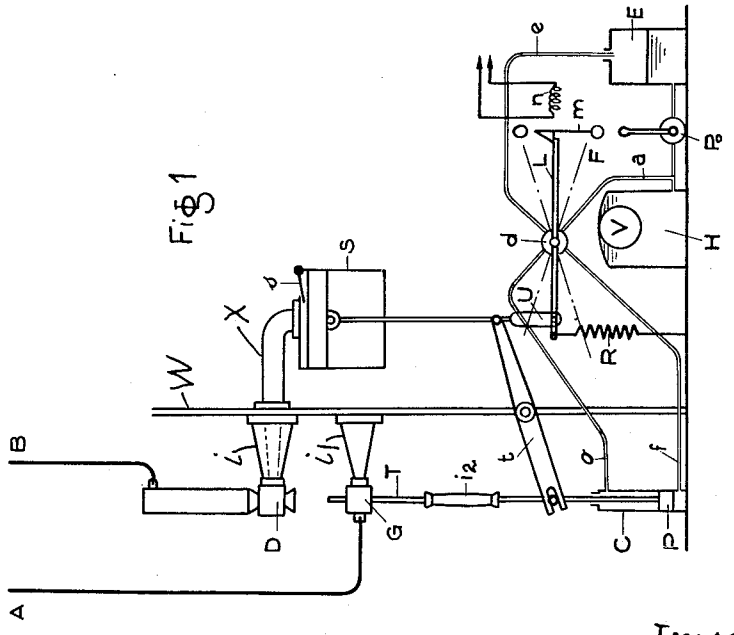

Inventor
Albert Thibaudat
By Robert E. Burns
Attorney

United States Patent Office 2,719,195 Patented Sept. 27, 1955

2,719,195

CIRCUIT BREAKER OPERATING SYSTEMS

Albert Thibaudat, Paris, France, assignor to Forges et Ateliers de Constructions Electriques de Jeumont, Paris, France, a corporation of France

Application March 26, 1952, Serial No. 278,537

Claims priority, application France April 2, 1951

6 Claims. (Cl. 200—82)

The present invention relates to improvements in operating systems of circuit breakers of the pneumatic blow-out type having self-contained means for furnishing a blast of air for blowing out an arc occurring upon the opening of the circuit breaker. The term "circuit breaker" is herein used in a generic sense to include switches, relays, cutouts, etc. having contacts that can be opened and closed to open or close an electrical circuit.

When the interrupting capacity of a circuit breaker is moderate, it is possible by means of appropriate construction to improve its mechanical and pneumatic efficiency sufficiently that the power of the opening springs which must also actuate the blowing means remains within acceptable limits. Apparatus of this kind is described and claimed in my co-pending application, Serial No. 278,538, filed of even date which issued as Patent Number 2,706,758 on April 19, 1955. However, when the interrupting capacity of the circuit breaker has to be higher, the required power of the springs becomes so great that the circuit breaker cannot be closed by hand.

The present invention is directed to eliminating this difficulty by providing a circuit breaker operating system which functions without the use of strong springs. In accordance with the invention, the circuit breaker is operated by a hydraulic system which is particularly simple, rapid and effective and is of a known type, but especially adapted for circuit breakers of the air blast type which have self-contained blowing means so that no separate compressor is required. The hydraulic operating system preferably functions in both directions to open and close the circuit breaker and has a hydro-pneumatic accumulator of sufficient capacity to effect a plurality of successive operations without recharging. The hydraulic system is provided with control means which is interconnected with the moving parts of the circuit breaker so as to decelerate the moving parts as they approach the end of their movement, thereby cushioning the action of the circuit breaker.

Other objects, characteristics and advantages of the invention will appear from the following description and claims in conjunction with the accompanying drawings, in which:

Fig. 1 is a schematic illustration of a circuit breaker and operating system embodying the invention; and

Fig. 2 is a schematic illustration of another embodiment.

Fig. 1 shows the operating system of a circuit breaker having a stationary contact located in an interrupting chamber D supported by a hollow insulator *i* on a wall or other support W and a movable contact in the form of a rod T which is slidable in a fixed friction contact G supported by an insulator i_1. The elements D and G are connected with conductors A and B of a high tension circuit that is to be controlled by the circuit breaker. The chamber D is hollow, to receive the moving contact T and to permit air to be blown through the chamber D to blow out an arc resulting from the opening of the contact. The movable contact T is slidable longitudinally

in both directions by means of a piston P operating in a hydraulic cylinder C, the contact being connected to the piston through an insulator i_2. Fluid under pressure is supplied through a conduit *o* connected to one end of the cylinder to move the piston P in a direction to open the contacts of the circuit breaker. A second conduit *f* connected to the opposite end of the cylinder P supplies fluid under pressure to move the piston P in the opposite direction to close the contacts. Since the contacts are thus opened and also closed hydraulically, there is no need of having strong opening springs as in prior constructions.

Compressed air for extinguishing the arc when the circuit breaker opens is supplied by a blowing arrangement S which is shown by way of example in the form of a cylinder which is connected with the hollow insulator *i* by a passageway X and has a piston operatively connected with the piston P of the hydraulic cylinder C, for example by means of a pivoted lever *t*.

It will be seen that, to open the circuit breaker, pressure fluid is supplied to the hydraulic cylinder C through the opening conduit *o*, thereby moving the piston P and the movable contact T downwardly and—through the pivoted lever *t*—forcing the piston of the blower S upwardly to compress the air in the blower cylinder and force it through the passageway X, the hollow insulator *i* and the hollow contact D to blow out an arc resulting from the opening of the contact.

Hydraulic fluid, such as oil, is supplied to the cylinder C under high pressure from a hydraulic accumulator H which is shown as an accumulator of the conventional hydro-pneumatic type comprising an elastic balloon V filled with air inside of a closed vessel containing the hydraulic fluid. The hydraulic accumulator H is connected by a conduit *a* with a a valve or distributor *d* to which are also connected the above mentioned conducits *o* and *f* leading to opposite ends of the hydraulic cylinder C and also an exhaust line *e* leading to a reservoir E. A pump Po connected with the reservoir E and the accumulator H is provided for pumping hydraulic fluid from the reservoir into the accumulator where it is stored under pressure. The pump is shown as being hand-operated but may, alternatively, be actuated by a small electric motor.

The volume of the hydraulic accumulator H is preferably sufficiently large to supply hydraulic fluid to the cylinder C to operate the circuit breaker several times on a single charge so that the accumulator need be pumped up only infrequently. The applicant has found that, if the pressures employed are sufficiently high, for instance of the order of 300 kg./cm.^{2}, the volume of the hydraulic accumulator H and also the size of the hydraulic cylinder C can be made very small.

The distributor *d* is actuated by a control lever L which, in the position indicated by a broken line and designated O, connects the line *a* with the line *o* and the line *f* with the line *e* in such a way that pressure fluid is supplied to the upper end of the hydraulic cylinder C while discharging fluid from the lower end of the cylinder, thereby causing the piston P to move downwardly to open the circuit breaker and operate the blower S. With the control lever L in the position indicated by a broken line and designated F, the distributor *d* connects the pressure supply line *a* with the line *f* leading to the lower end of the cylinder and the line *o* with the discharge line *e* so that the piston P is moved upwardly to close the circuit breaker. In the intermediate position of the lever L, shown in solid lines in Fig. 1, all of the conduits connected with the distributor *d* are closed.

The control lever L is biased toward its contact-opening position O by a small spring R but is releasably retained in the intermediate position shown in the drawings by a tripping arrangement such as a pawl or catch *m* which may be released manually or by an overload relay or,

alternatively, by an electromagnetic coil n which is remotely controlled. The control lever L of the distributor d is also interconnected with the movable contact T so as to be actuated by the movement of said contact, as described below. As illustrated in the drawings, this connection is provided by a slotted link U which engages a pin on the lever L and is connected through the pivoted lever t and insulator i_2 with the movable contact T of the circuit breaker.

In the position shown in Fig. 1, the circuit breaker is open. In order to close it, the control lever L of the distributor d is moved to the position F either by hand or otherwise, as, for example, by a remotely controlled solenoid (not shown). With the control lever L maintained by the solenoid in the position F, oil under pressure from the hydraulic accumulator H passes through the lines a and f and moves immediately the piston P upwardly. Upward movement of the piston P slides the contact rod T upwardly toward the fixed contact in the chamber D. Oil from the upper part of the cylinder C is discharged through the lines o and e into the receptacle E. Near the end of the upward movement of the contact rod T, the end of the slot in the link U engages the pin on the lever L to move the control lever L back toward the intermediate position shown in solid lines in Fig. 1. The resulting progressive closing of the hydraulic lines produces an effective deceleration of the moving parts of the circuit breaker as they approach the end of their movement. The action of the circuit breaker is thereby effectively cushioned. To avoid retarding the closing movement, the blower cylinder S is provided with a suitable check or flap valve s to permit relatively free entry of air into the cylinder as the piston of the blower moves downwardly during the closing of the circuit breaker.

To open the circuit breaker, the trip m is released, for example by energizing the coil n. This coil may be controlled by a safety relay, a remote control or in any other desired manner. When the control lever L is thus released, it is moved in a counterclockwise direction by the light spring R to the contact-opening position O. With the control lever L in position O, pressure fluid is supplied from the hydraulic accumulator H through the lines a and o to the upper end of the hydraulic cylinder C while fluid from the lower end of the cylinder is discharged through the lines f and e into the receptacle E. This causes the piston P, and hence the movable contact T, to move downwardly, thereby opening the circuit breaker. As the circuit breaker opens, the piston of the blower S is moved upwardly by the connecting lever t to produce a strong air blast, as described above. Toward the end of the opening movement, the end of the slot in the link U engages the lever L to bring it back to the intermediate position shown in the drawings, thereby progressively closing the hydraulic lines and causing a progressive deceleration of the moving parts of the circuit breaker.

Another embodiment of the invention is shown in Fig. 2 wherein certain like parts are designated by the same reference characters. In the embodiment of Fig. 2, the circuit breaker is shown with a hollow, fixed, interrupting chamber D_1 mounted on an insulating tube I and having an interrupting resistance r and a pivotally mounted moving contact K which is movable from the closed position, shown in solid lines, to an open position K', shown in broken lines. In moving from the closed position to the position K', the contact K effects successively the interruption of the circuit A—B and its visible disconnection. Alternatively, the contact K may serve only for the visible disconnection of the circuit, the actual interruption of the circuit being effected in known manner by interior contacts of the chamber D_1 which are actuated pneumatically.

The circuit breaker is actuated by two driving pistons P_1 and P_2 which operate, respectively, in cylinders C_1 and C_2 and are connected with one another by a rack p which engages a pinion Q. The pinion Q is provided with a radially projecting arm g which is connected by an insulating link I_2 with a bellcrank lever k carrying the movable contact K. Thus, upward movement of the pistons P_1 and P_2 from the position shown causes the pinion Q to turn, and hence the associated arm g to swing in a counterclockwise direction, pulling downwardly on the link I_2 to open the switch. The closing of the switch is effected through the same mechanical connections by movement of the pistons P_1 and P_2 in the opposite direction.

Compressed air flow for extinguishing an arc resulting from the opening of the contacts is supplied by a blower S comprising a cylinder connected directly to the tubular insulator I and containing a piston which is fixed on an extension of the rack p so as to move with the driving pistons P_1 and P_2.

Fluid pressure for operating the pistons P_1 and P_2 is supplied by a hydraulic system comprising a hydropneumatic accumulator H connected by a pressure line a with a distributor d_2 which, in turn, is connected to the cylinder C_1 by a conduit f_1 and to the cylinder C_2 by a conduit o_1. A discharge line e extends from the distributor d_2 to a reservoir E from which the fluid is pumped back to the accumulator H through a conduit e_1 by means of a pump Po.

The distributor d_2 is of the slide-valve type with a reciprocable slide d_1. When the slide is in its lowermost position, pressure fluid is supplied through lines a and f_1 to the cylinder C_1 while fluid is exhausted from cylinder C_2 through lines o_1 and e. When the slide d_1 is in its uppermost position, pressure fluid is supplied to cylinder C_2 through line o_1 and fluid is exhausted from cylinder C_1 through lines f_1 and e. In an intermediate position of the slide, as shown in Fig. 2 of the drawings, the hydraulic lines a, f_1, o_1 and e are all closed.

The distributor d_2 is controlled by a pivoted control lever L which is connected by a link d_4 to the slide d_1 of the distributor. As in the embodiment of Fig. 1, a light spring R tends to move the control lever L to a position for opening the circuit breaker, the lever being held in intermediate position against the action of the spring R by means of a releasable trip or catch m which is retractable by a solenoid n to release the control lever. The operation of the control lever is substantially the same as described above in connection with Fig. 1.

On an extension of the slide d_1 of the distributor, there are provided two spaced abutments or stops d_3. These abutments are engageable by a projecting end portion of the aforementioned arm g which actuates the moving contact of the circuit breaker. The positioning and spacing of the discs d_3 is such that, with the slide in its lowermost—i. e. contact-closing—position, the arm g will engage the upper disc d_3 as the movable contact approaches the end of its closing movement so as to move the slide back to the intermediate position shown in the drawings. Conversely, with the slide in its uppermost—or contact-opening—position, the arm g engages the lower disc d_3 as the movable contact approaches its fully open position K' so as to move the slide back to its intermediate position in which the hydraulic lines are closed. Thus, as in Fig. 1, the rate of movement of the moving parts of the circuit breaker is attenuated as the parts reach the end of their movement.

It will be seen from Figs. 1 and 2 that, when the circuit breakers are in closed position, their control levers L are in the intermediate position shown in the drawings and the springs R are under tension, tending to move the control levers to contact-opening position. It is therefore sufficient to release the trip m to bring about the opening of the circuit breakers by the hydraulic operating means and control. This arrangement has numerous important advantages. The components of the hydraulic system are simple, rugged and of very small dimensions. The quantities of liquid to be displaced are minimal.

As the number and mass of moving parts are also small, very rapid movement is obtained without shock or vibration. Moreover, the absence of powerful opening springs, such as are generally used in circuit breakers, eliminates the high mechanical forces to which the parts are subjected and this, in turn, lightens the moving parts of the circuit breaker. Finally, the controls of the kind described make possible the elimination of sensitive catches, blowout valves and other expensive and delicate members of the usual pneumatic circuit breakers.

It is thus seen that, by virtue of a particular combination of circuit breakers and their controls providing for the special conditions which characterize the combined functioning of the apparatus, there is obtained an exceptional simplicity of assembly, rapidity and certainty of opening and closing movements, while at the same time avoiding sudden shocks, as well as great ruggedness of all the elements and a complete autonomy so that no separate compressors or other equipment are required.

Besides these advantages, the experiments conducted by the applicant show that a hydraulic accumulator of very small dimensions designed and used in accordance with the invention is able to furnish high, instantaneous driving forces which are amply sufficient for two or more operations of a circuit breaker of high interrupting capacity. These experiments also show that an oil pump driven by a fractional horse-power motor is sufficient to recharge the accumulator. Such a pumping installation is extremely simple, small and inexpensive and does not give rise to any of the complex problems, such as filtration, compression and expansion of air, elimination of moisture, etc., which are encountered in conventional air compressors of pneumatic circuit breakers. The invention thus makes possible the realization of pneumatic circuit breakers which are simple, inexpensive, relatively powerful and, at the same time, completely independent and, hence, applicable to any kind of installation.

It will be understood that the invention is in no way limited to the preferred embodiments shown by way of example in the drawings. The elements and features of these two embodiments are mutually interchangeable and still other modifications may be made within the scope of the invention.

What I claim and desire to secure by Letters Patent is:

1. In a circuit breaker of the pneumatic blowout type, cooperating contacts including a movable contact, pneumatic blowout means comprising an air chamber having a movable wall, an inlet communicating with the atmosphere and an outlet, said wall being movable to produce a blast of air from said outlet, conduit means connected with said outlet and directing air from said chamber to extinguish an arc between said contacts when opened and means for actuating said movable contact and blowout means comprising a high pressure hydro-pneumatic accumulator, a high pressure hydraulic motor of the reciprocating type operatively connected with said movable contact and with said movable wall for opening and closing the circuit breaker, and conduit means connecting said motor with said accumulator including distributing valve means for controlling automatically the flow of liquid from said accumulator to said motor, said valve means being biased to a position for opening the circuit breaker, and releasable trip means for holding said valve means against said bias.

2. In a circuit breaker of the pneumatic blowout type, cooperating contacts including a movable contact, pneumatic blowout means comprising an air chamber having a movable wall, an inlet communicating with the atmosphere and an outlet, said wall being movable to produce a blast of air from said outlet, conduit means connected with said outlet and directing air from said chamber to extinguish a resulting arc when the contacts are opened, operating means for opening and closing said contacts and for actuating said blowout means, said operating means comprising a hydraulic motor formed of at least one hydraulic cylinder and piston, operative connections between said hydraulic motor and said contacts and said blowout means, a hydro-pneumatic accumulator of sufficiently large capacity to operate the circuit breaker a plurality of times on a single charge, pumping means for recharging said accumulator, hydraulic connections between said accumulator and said motor to supply liquid under pressure to said cylinder to operate the circuit breaker, a hydraulic distributor interposed between the accumulator and motor to control the flow of liquid to said motor and thereby control the direction and rate of operation of said circuit breaker, and means for controlling said distributor including manual control means, electrical control means and automatic control means comprising means connecting said distributor with the movable contact to shut off the flow of hydraulic liquid to said motor progressively as said movable contact approaches the end of its movement.

3. In a circuit breaker of the pneumatic blowout type, cooperating contacts including a movable contact, pneumatic blowout means comprising an air chamber having a movable wall, an inlet communicating with the atmosphere and an outlet, said wall being movable to produce a blast of air from said outlet, conduit means connected with said outlet and directing air from said chamber to extinguish a resulting arc when the contacts are opened, a hydraulic operating system arranged for closing and opening said contacts and for actuating said blowout means concurrently with the opening of the contacts, said system comprising a hydraulic motor formed of at least one hydraulic cylinder and piston, operative connections between said hydraulic motor and said movable contact and blowout means, a hydro-pneumatic accumulator of sufficiently large capacity to operate the circuit breaker a plurality of times on a single charge, pumping means for recharging said accumulator, hydraulic connections between said accumulator and said motor to supply fluid under pressure to said motor to operate the circuit breaker, distributing valve means interposed in said connections between the accumulator and motor to control the flow of fluid to the motor, means for biasing said valve means to an open position for supplying fluid from the accumulator to the motor to open the contacts, releasable trip means for holding the valve means against said bias in a closed position, and means connecting said valve means with said movable contact to move said valve means progressively to closed position as said contact approaches the end of its movement, thereby cushioning the stopping of said contact.

4. In a circuit breaker of the pneumatic blowout type, cooperating contacts including a movable contact, pneumatic blowout means comprising an air chamber having a movable wall, an inlet communicating with the atmosphere and an outlet, said wall being movable to produce a blast of air from said outlet, conduit means connected with said outlet and directing air from said chamber to extinguish a resulting arc when the contacts are opened, an operating system for moving said movable contact alternately in both directions to open and close said contacts and for operating said blowout means concurrently with the opening of the contacts, said operating system comprising a hydraulic motor formed by at least one hydraulic cylinder and piston, operative connections between said hydraulic motor and said movable contact and blowout means, a hydro-pneumatic accumulator of sufficiently large capacity to operate the circuit breaker a plurality of times on a single charge, hydraulic connections between said accumulator and said motor to supply fluid under pressure to said motor to operate the circuit breaker, a hydraulic distributor interposed in the connections between the accumulator and motor and having a contact-opening position in which fluid is supplied to said motor to open the contacts, a contact-closing position in which

fluid is supplied to close the contacts and an intermediate position in which flow of fluid is shut off, means for biasing said distributor toward contact-opening position, trip means for releasably holding said distributor against the bias in said intermediate position, and mechanical means connecting said distributor with said movable contact to move said distributor progressively to said intermediate position as said contact approaches the end of its movement in each direction.

5. In a circuit breaker of the pneumatic blowout type, a fixed contact and a movable contact, a blower for supplying a blast of air to blow out a resulting arc when the contacts are opened, a hydraulic operating system arranged for moving said movable contact and operating said blower, said operating system comprising a hydraulic motor having at least one hydraulic cylinder, a piston reciprocable in said cylinder and operative linking means between said piston and the movable contact and blower, a hydropneumatic accumulator, hydraulic connections between said accumulator and said motor to supply fluid under pressure to said motor to move said piston alternately in opposite directions to open and close said contacts, a hydraulic distributor interposed in the connections between the accumulator and motor to control the supply of fluid to the motor and comprising a pivotal control lever having a contact-closing position in which fluid is supplied to the motor to close the contacts, a contact-opening position in which fluid is supplied to the motor to open the contacts and an intermediate position in which flow of fluid in the cylinder is shut off, a mechanical connection between the control lever and the movable contact to move the control element to intermediate position when the contacts are opened and when they are closed, said connection comprising a slotted link cooperating with said lever to provide a lost motion connection, a bias for moving said control lever to contact-opening position and releasable tripping means for holding the control lever in intermediate position against the action of said bias.

6. In an air-blast circuit breaker, a fixed contact, a movable contact, a blower, a hydraulic operating system for moving said movable contact and operating said blower, said operating means comprising a hydraulic motor formed of at least one hydraulic cylinder, a piston reciprocable in said cylinder and operative connections between said piston and the movable contact, a hydro-pneumatic accumulator, hydraulic connections between said accumulator and said motor to supply fluid under pressure to said motor to alternately open and close said contacts, a hydraulic distributor interposed in the connections between the accumulator and cylinder to control the supply of fluid to the motor and comprising a control lever having a contact-closing position in which fluid is supplied to the motor to close the contacts, a contact-opening position in which fluid is supplied to the motor to open the contacts and an intermediate position in which flow of fluid to the motor is shut off, a slidable rod interconnected with said lever and having spaced abutments thereon, a mechanical connection between the control lever and the movable contact comprising a movable finger engageable alternately with said abutments to move the control element to intermediate position when the contacts are opened and when they are closed, a bias for moving said control lever to contact-opening position and releasable tripping means for holding the control lever in intermediate position against the action of said bias.

References Cited in the file of this patent

UNITED STATES PATENTS

2,292,095	Thumim	Aug. 4, 1942
2,450,628	Boisseau et al.	Oct. 5, 1948
2,568,008	Jansson	Sept. 18, 1951
2,576,132	Marbury	Nov. 27, 1951
2,662,133	Burmeister	Dec. 8, 1953