(No Model.) 2 Sheets—Sheet 1.

E. SALTZKORN & L. NICOLAI.

MACHINE FOR CONNECTING THE CORNERS OF PASTEBOARD BOXES.

No. 456,639. Patented July 28, 1891.

Fig. 1.

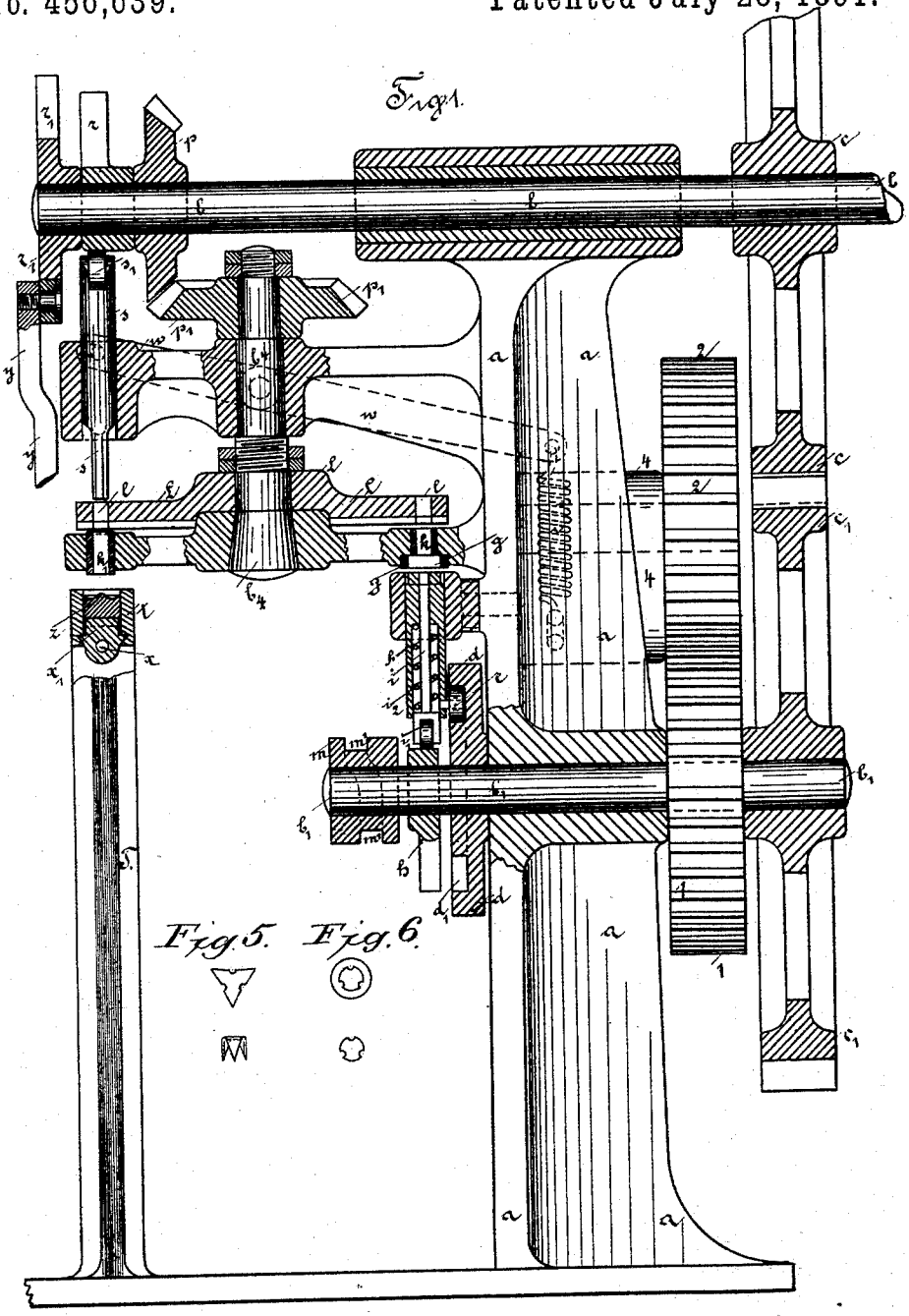

Fig. 5.

Fig. 6.

Witnesses
Thomas Durant
E. F. Smith

Inventors
Emil Saltzkorn and
Ludwig Nicolai
by Church & Church
their attorneys

THE NORRIS PETERS CO., PHOTO-LITHO., WASHINGTON, D. C.

(No Model.) 2 Sheets—Sheet 2.

E. SALTZKORN & L. NICOLAI.

MACHINE FOR CONNECTING THE CORNERS OF PASTEBOARD BOXES.

No. 456,639. Patented July 28, 1891.

Fig. 2.

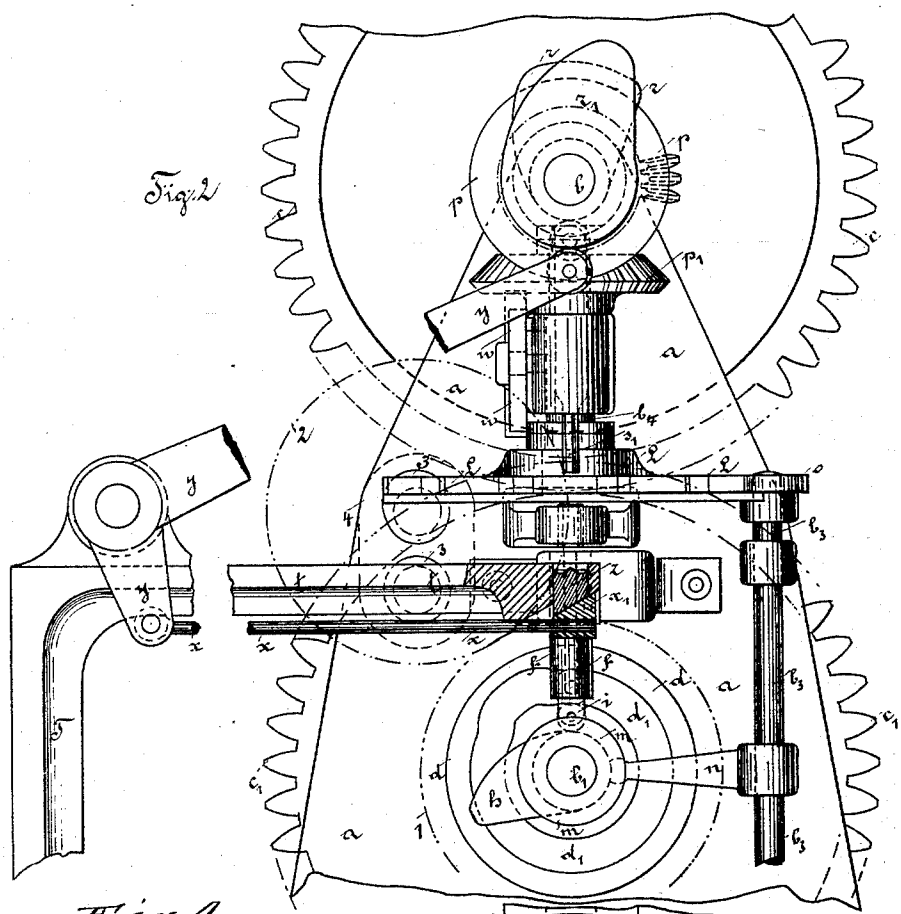

Fig. 4.

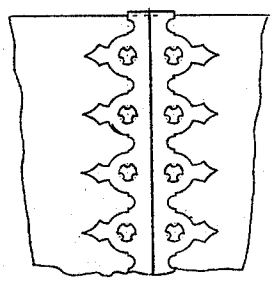

Fig. 3.

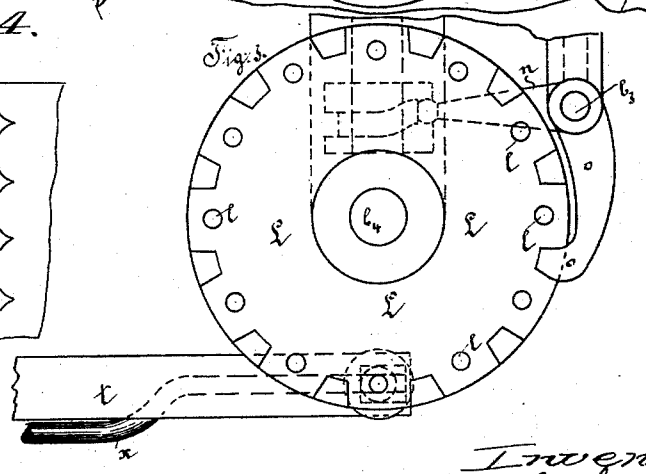

Witnesses
Thomas Durant
E. D. Smith

Inventors
Emil Saltzkorn and
Ludwig Nicolai
by Church & Church
their attorneys

THE NORRIS PETERS CO., PHOTO-LITHO., WASHINGTON, D. C.

UNITED STATES PATENT OFFICE.

EMIL SALTZKORN AND LUDWIG NICOLAI, OF DRESDEN, GERMANY.

MACHINE FOR CONNECTING THE CORNERS OF PASTEBOARD BOXES.

SPECIFICATION forming part of Letters Patent No. 456,639, dated July 28, 1891.

Application filed November 24, 1890. Serial No. 372,506. (No model.)

To all whom it may concern:

Be it known that we, EMIL SALTZKORN and LUDWIG NICOLAI, subjects of the King of Saxony, residing at Dresden, in the Kingdom of Saxony, German Empire, have invented certain new and useful Improvements in Machines for Connecting the Corners of Pasteboard Boxes, of which the following is a specification.

This invention relates to the connecting or fastening of the corners of pasteboard boxes and to a machine enabling such fastening to be carried out in practice.

According to this invention the walls of the box are connected by means of corner-pieces of any suitable material, such as card-board, leather, metal, or the like, which can be finished or decorated in any desired manner. The peculiarity of the fastening consists in fixing the said corner-pieces to the walls of the box by means of rivets provided with a number of points or teeth. Where rivets are at present used, the material has to be previously perforated. In employing the improved rivets with multiple teeth, however, this necessity is obviated. The points or teeth pass through the material and are bent down at the back in different directions, while the whole surface of the head of the rivet snugly adheres to the connected corner-surfaces. The head of the rivet preferably assumes the shape of a star formed of three or more points, so that the turned-down teeth provided around the periphery of the head are spread as widely as possible apart, and thereby prevent the perforated portions from being torn away. Owing to this construction too, each of the narrow teeth driven through the material forms of itself an independent fastening for the joint.

The machine adapted to carry out this invention in practice stamps the star-shaped blanks of rivets out of a metal band which is automatically fed to it, and converts them into rivets by forcing them into a channel, from which they are carried by the finishing die or stamp into a conveying arrangement, which in its turn directs them into the channel through which they are driven into the corners of the card-board box by another descending die, while a third or counter die moving upwardly flattens down the points on the opposite side. The operation is so timed that the rising of the cutting-out die coincides with the descent of the corner-fastening and that the rising of the finishing-die similarly coincides with the movement of the counter or flattening die, the motion of the conveying device taking place after all the dies have completed their return-stroke.

In the accompanying drawings, Figure 1 is a cross-section of the front end of the machine. Fig. 2 is a side view of the same, and Fig. 3 is a plan of the conveyer. Fig. 4 is a view of a box-corner fastened. Fig. 5 shows the shape of the rivets. Fig. 6 shows the end of the die or stamp s and the stationary channel k'.

The shafts b b', supported by the frame a, are connected by gearing c c' and receive a uniform rotary motion from any suitable source of motive power connected with the driving-shaft b. The other shaft b' rotates a cam d, in the irregular curve d' of which runs a roller e, connected with the hollow die f, which is thereby vertically reciprocated, and in so doing stamps the metal sheet fed between it and the matrix g to a desired shape. Another cam h, secured to the shaft b', raises the finishing-die i, provided at its foot with a roller i'. This die is arranged within the hollow die f and guided by the head thereof. When this takes place, the spiral spring i^2 is compressed, and when the die is relieved from pressure it forces it down into its original position again. The finishing-stamp i acts upon the central portion of the star cut out of the metal sheet, and for the purpose of forming the rivet forces it into the channel k, thus turning up the points or teeth. The finishing-die i conducts the rivet through the channel k up into another channel l, provided in the conveying-disk L, arranged above where it leaves the rivet, and itself moves back to its original place. Upon the shaft b' is also mounted a roller m, in the periphery of which a curve m' is cut out. In this curve is guided an arm n of the shaft b^3, whereby the latter is oscillated backward and forward, which oscillating motion is communicated to the pawl o, attached to the head of the said shaft b^3. This brings the pawl into and out of engagement with the rim of the conveying-disk L. The latter receives its rotary motion from the main shaft b by means of bevel-gear, the wheel p of which, mounted upon the shaft b, is pro-

vided with three closely-set teeth only, while the other wheel p', mounted upon the shaft b^4 of the conveying-disk L, carries thirty-six teeth. Owing to this arrangement the said conveying-disk is moved or rotated intermittingly. In this disk are provided a number of channels l, it being here assumed by way of example that there are twelve such channels. These alternately receive the rivets in course of formation and convey them underneath the corner-fastening die, there being at all times six channels occupied by rivets and six free channels.

Upon the shaft b is mounted a cam r, adapted to press down with its operative face the corner-fastening stamp s, provided with a roller s'. The rivet contained in the channel l, which is at the time situated underneath the die s, is then forced by the latter through the stationary channel k' into the card-board or material forming the corner of the box, which latter is placed for the purpose against the guide-rail t of the support T. The corners of the box being thus fastened or riveted, the stamp s is drawn up again through the expansion of a spiral spring v, attached to the frame a, and through the medium of a lever w.

The counter-stamp z, guided by the guide-rail t, and having for its object to turn and flatten down the points of the rivets after they have been driven through the card-board, is set in motion by the displacement of the bar x, supported by the said guide-rail t and connected with a lever y, which is depressed by a cam r', mounted upon the shaft b, when the bar x is drawn back. Owing to the inclines formed both on the lower surface of the counter-stamp z and on the head or projection x' of the bar x, the said counter-stamp rises whenever the bar x moves backwardly, while as the bar advances it sinks, owing to its own weight. The shaft b' is also provided with a gear-wheel 1, engaging with the teeth of a similar wheel 2, fixed upon a roller 3. This roller as well as a second lower roller, also numbered 3, are supported together in a bracket 4 of the frame, their object being to cause the metal sheet to be fed under the stamping-out device. For this purpose a shoulder is provided upon one of the rollers 3, which shoulder at a given moment comes into contact with the metal sheet lying upon the other roller and moves it one step. This shoulder is preferably formed by making the upper roller cam shape, as shown. While the upper or cam-shaped roller completes its revolution, no contact takes place between it and the lower roller, and therefore the metal sheet remains stationary until again grasped by the shoulder of the said upper roller.

We claim—

1. In a machine for forming and setting fasteners, the combination, with the conveyer having the bottomless receptacles and the setting-stamp working through said receptacles, of the bottomless matrix on one side of the conveyer, the cutter-die passing into the matrix to cut the fastener, and the forming-die passing through said first-mentioned die and into the conveyer-receptacles to form the fasteners and push the same into the said receptacles, substantially as described.

2. In a machine for forming and setting fasteners, the combination, with the rotary conveyer, the discharging and setting stamp working through said conveyer, and the guide and anvil below the same, of the stationary bottomless matrix below the conveyer, the cutting-die working into said die, and the forming-plunger passing through the cutting-die, through the matrix, and into the conveyer, whereby the fasteners are cut, formed, and pushed into the conveyer, substantially as described.

3. In a machine for setting fasteners, the combination, with the conveyer, the stationary guide, and the discharging and setting stamp working through said guide, of the movable anvil below the guide, and means, substantially as described, for raising the same as the plunger descends, substantially as described.

4. In a machine for setting fasteners, the combination, with the conveyer, the stationary guide below the conveyer, and the setting-stamp working through the guide, of the longitudinally-movable anvil, and the inclined surfaces up which said anvil rides, whereby the same is elevated into proximity to the guide, substantially as described.

5. In a machine such as herein described, the combination, with the driving mechanism, the oppositely-operating die and stamp driven thereby, and the conveyer passing from one to the other, of the stationary matrix and guide below the conveyer, the movable anvil below the guide, and connection between said anvil and driving mechanism, whereby the same is moved into proximity to the guide, substantially as described.

6. In a machine for forming and setting fasteners, the combination, with the two horizontal shafts geared together, the vertically-working die and stamp mounted in bearings above and below said shafts, respectively, and the cams on the shafts for operating the same, of the horizontal rotary conveyer having bottomless receptacles therein, connections between said conveyer and one shaft, whereby it is rotated intermittingly, a stationary matrix between die and conveyer, whereby a fastener is formed and pushed into the conveyer, and an anvil opposite the stamp, whereby the fastener may be discharged from the conveyer and its ends upset, substantially as described.

In testimony whereof we have hereunto set our hands in presence of two witnesses.

EMIL SALTZKORN.
LUDWIG NICOLAI.

Witnesses:
RUDOLF SCHMIT,
PAUL DRUCKMÜLLER.