United States Patent [19]

Johnshoy

[11] E **Patent Number: Re. 33,278**

[45] **Reissued Date of Patent: Jul. 31, 1990**

[54] **CONTINUOUSLY VARIABLE TRANSMISSION AND TORQUE RETAINING DIFFERENTIAL**

[76] Inventor: **Edward W. Johnshoy**, R.R. #1, Box 258A, Mentor, Minn. 56736

[21] Appl. No.: **295,289**

[22] Filed: **Dec. 30, 1988**

Related U.S. Patent Documents

Reissue of:

[64] Patent No.: **4,784,017**
Issued: **Nov. 15, 1988**
Appl. No.: **27,215**
Filed: **Mar. 17, 1987**

U.S. Applications:

[63] Continuation-in-part of Ser. No. 881,827, Jul. 3, 1986.

[51] **Int. Cl.**[5] **F16H 37/06**; F16H 1/40

[52] **U.S. Cl.** ..... **475/6**; 74/665 T; 475/5; 475/7; 475/9

[58] **Field of Search** ..... 74/665 A, 665 B, 665 C, 74/665 T, 715, 710, 713, 674, 675, 793

[56] **References Cited**

U.S. PATENT DOCUMENTS

633,234	9/1899	Catois	74/665 T
1,724,714	8/1929	Kersten	74/675
2,128,413	8/1938	Hejduk et al.	74/665 A
2,422,343	6/1947	Duer	74/675
2,780,299	9/1956	Egy	74/675
2,840,841	5/1958	Matson	74/713 X
2,847,876	8/1958	Willard	74/681 X
2,898,779	5/1958	Mickelson	74/715
3,013,452	12/1961	Hornbostel	75/675
3,220,284	11/1965	Horvath	74/674
3,364,789	1/1965	Whitfield	74/675
3,477,300	11/1969	Segerstad	74/675
3,788,165	1/1974	Klotsvog	74/665 C X
4,599,916	7/1986	Hirosawa	74/689
4,602,525	7/1986	Moroto et al.	74/689
4,608,885	9/1986	Koivunen	74/689
4,624,153	11/1986	Itoh et al.	74/689
4,627,308	12/1986	Moroto et al.	74/689
4,628,766	12/1986	de Brie Perry	74/691
4,630,504	12/1986	Smirl	74/689
4,633,736	1/1987	Sakakibara et al.	74/689
4,644,820	2/1987	Macey et al.	74/689
4,700,589	10/1987	Coronel	74/681 X

FOREIGN PATENT DOCUMENTS

567890	10/1957	Italy	74/675

OTHER PUBLICATIONS

Lamm, Michael; "Get Ready for a New Kind of Automatic Transmission," *Popular Mechanics*, Jun. 1984, pp. 70–71, 105–108.

Primary Examiner—Dirk Wright
Attorney, Agent, or Firm—Kinney & Lange

[57] **ABSTRACT**

A fully geared continuously variable transmission controls output ratios of differentiating gear sets by using a control gear set that is controlled as to rotation speed by a variable speed drive. The ratio gear sets can be bevel gear differentiating clusters or planetary gear sets. As disclosed, the transmission may have two sets of ratio control gears driving separate output shafts that are coupled to rotatable worms engaged with a worm gear to control differentiation between the output shafts which are used as drives for two wheel or four wheel drive vehicles at selected engine idle rpm the variable speed drive rotates the control gears at a selected speed and directs rpm, that holds the output shafts at 0 rpm. As engine rpm is increased to selected cruising final drive ratio the variable speed drive rpm is decreased proportionately to zero to change the output drive ratio continuously as a function of a selected parameter.

13 Claims, 13 Drawing Sheets

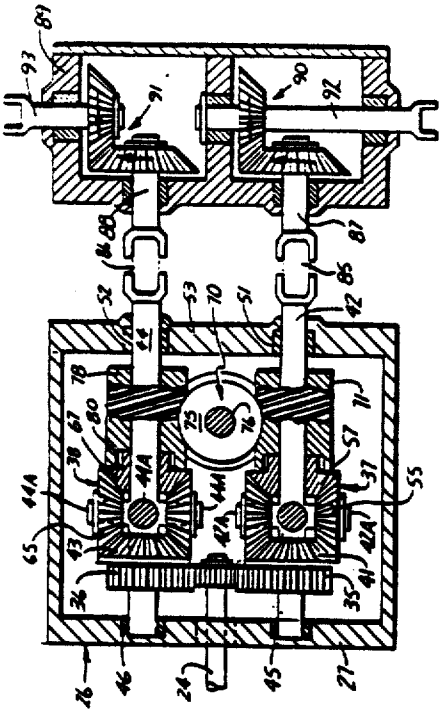

Fig. 2

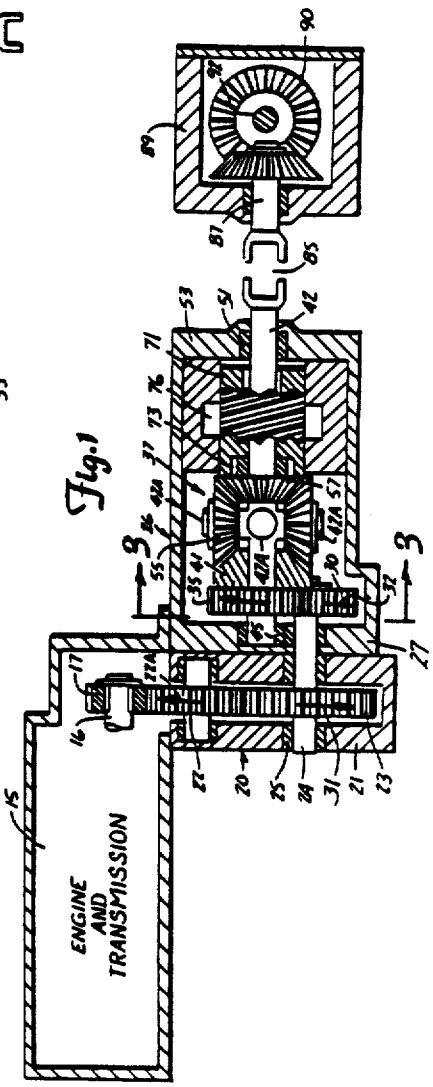

Fig. 1

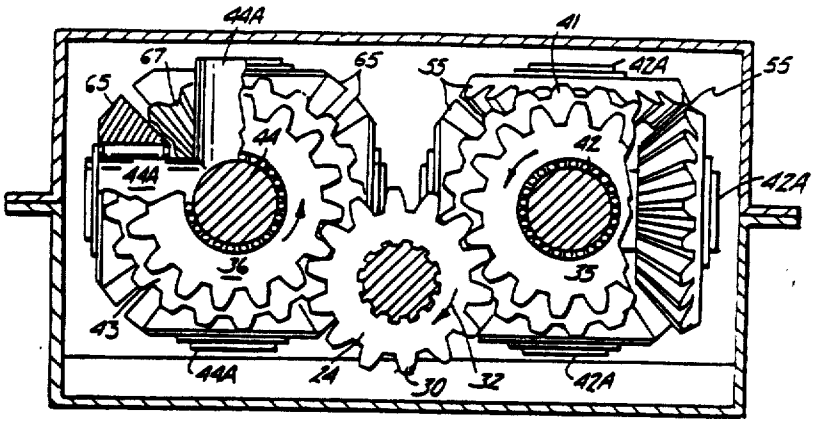
44A
41
67
65
55
42A
44
42
36
35
43
24
30
32

Fig.3

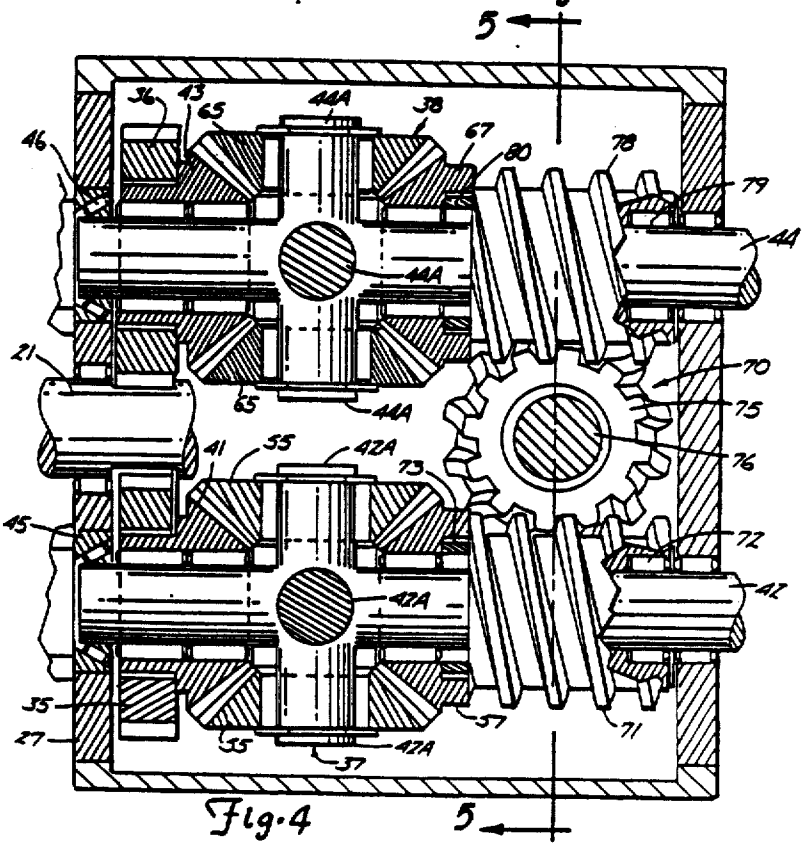
5
36
43
65
44A
38
67
80
78
79
46
21
70
75
76
41
55
42A
73
45
72
35
27
57
71
37

Fig.4

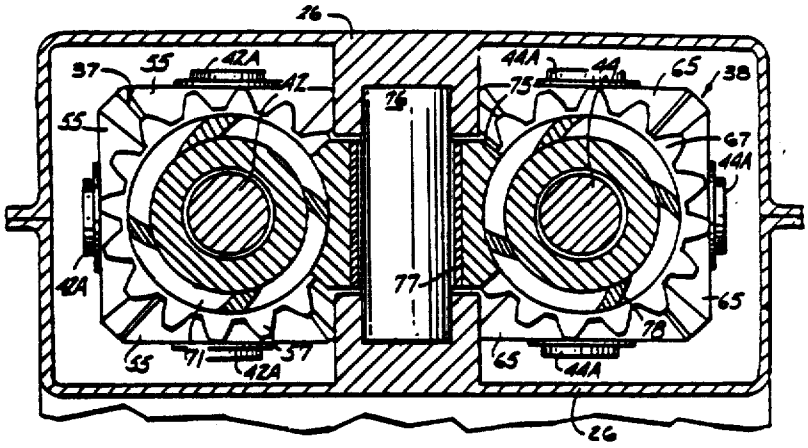
26
37
55
42A
42
44A
44
65
38
75
76
55
67
44A
42A
77
65
78
55
71
57
42A
65
44A
26

Fig.5

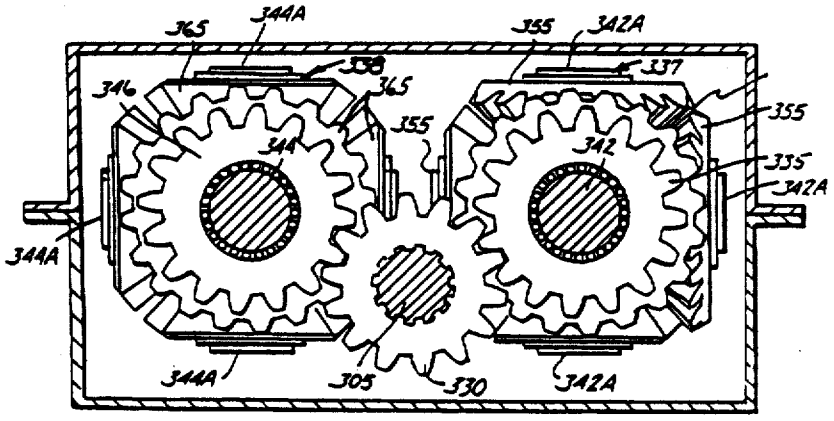
365
344A
355
342A
338
337
346
365
355
355
344
342
335
342A
344A
344A
305
330
342A

Fig. 11

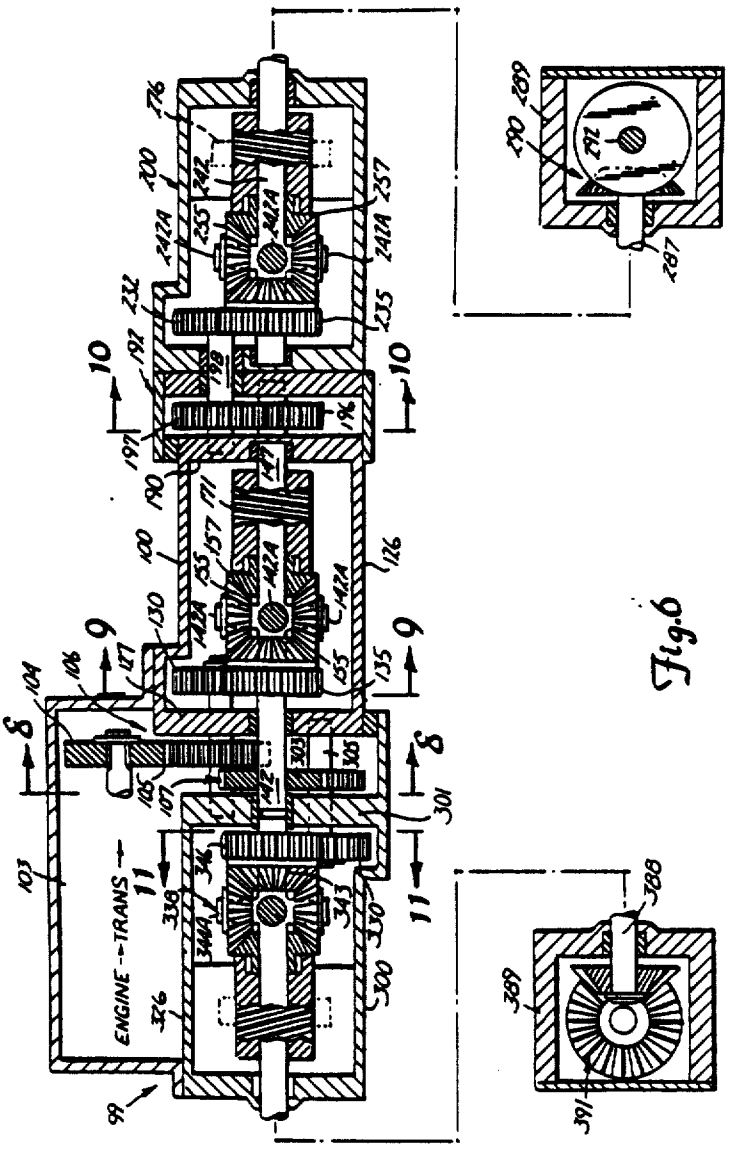

Fig.6

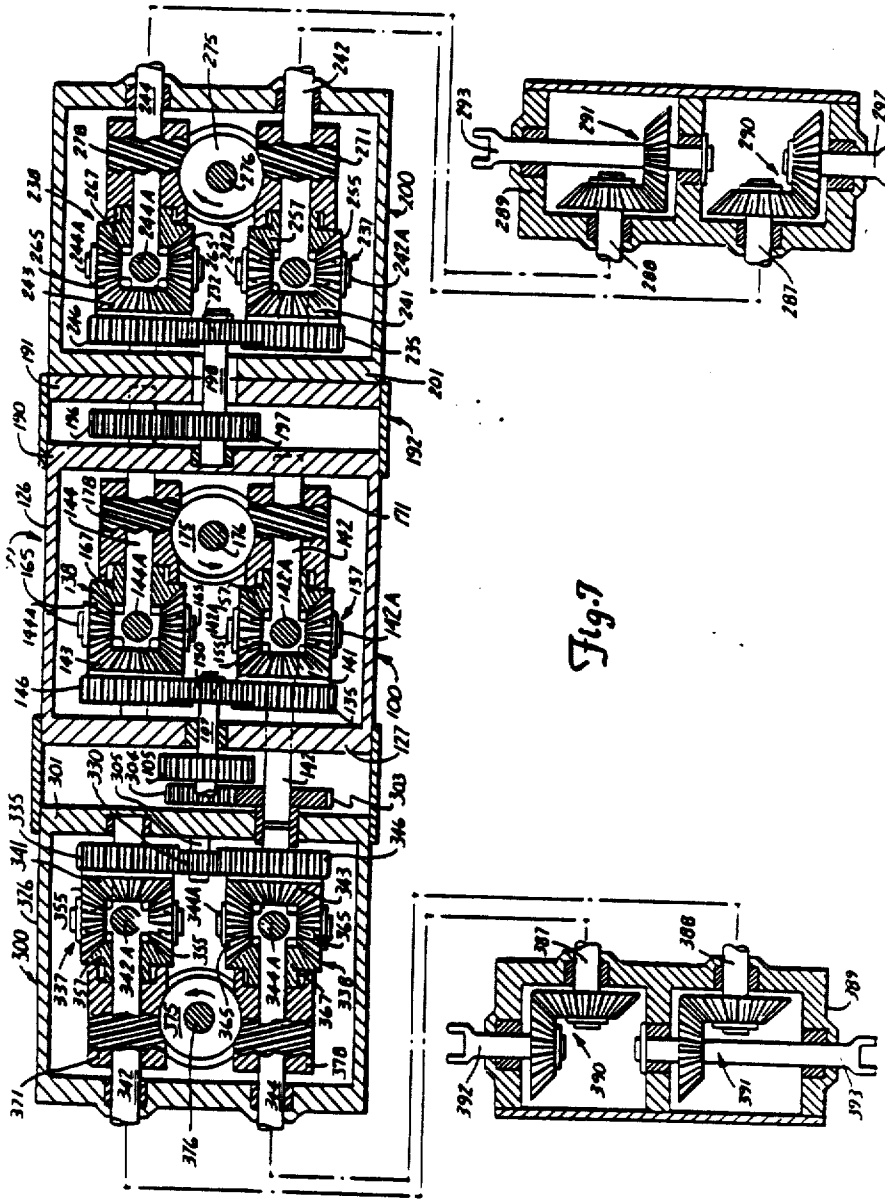

Fig.7

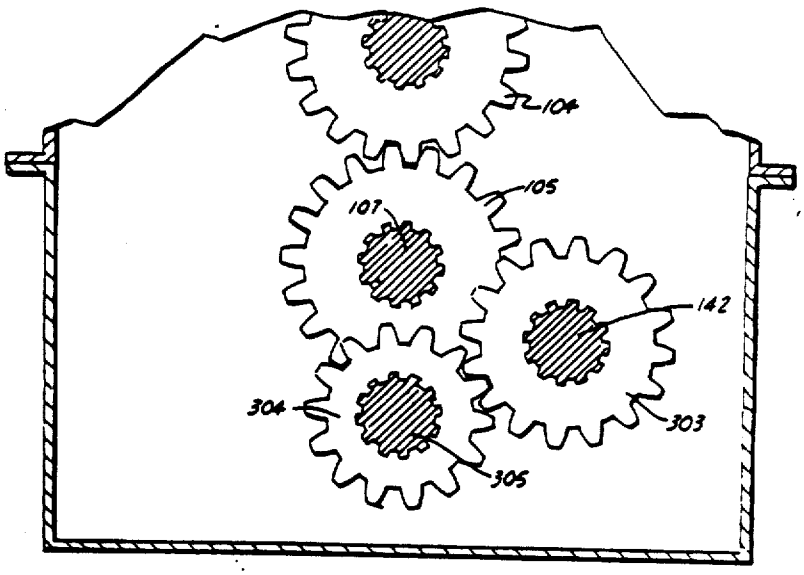
104
105
107
142
304
303
305

Fig.8

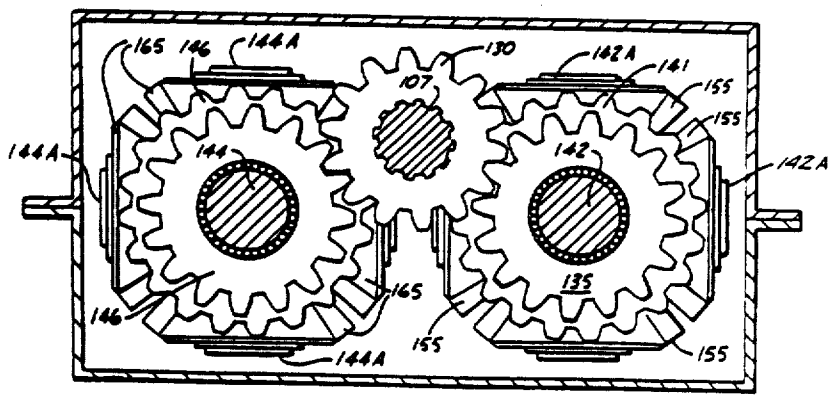
165
146
144A
130
142A
141
107
155
155
144A
144
142
142A
135
165
146
155
155
144A

Fig.9

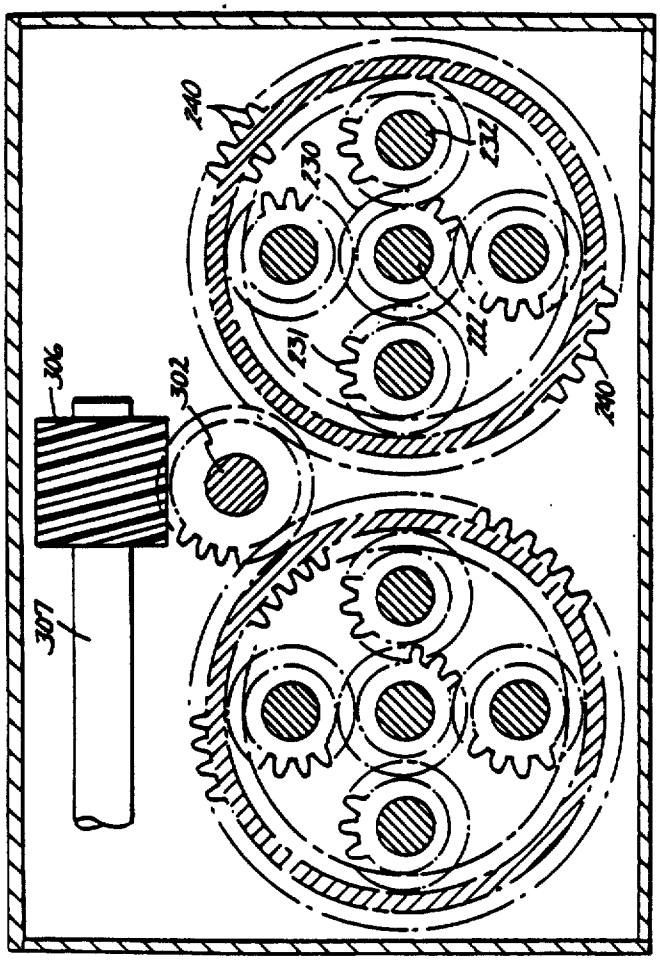

Fig.10

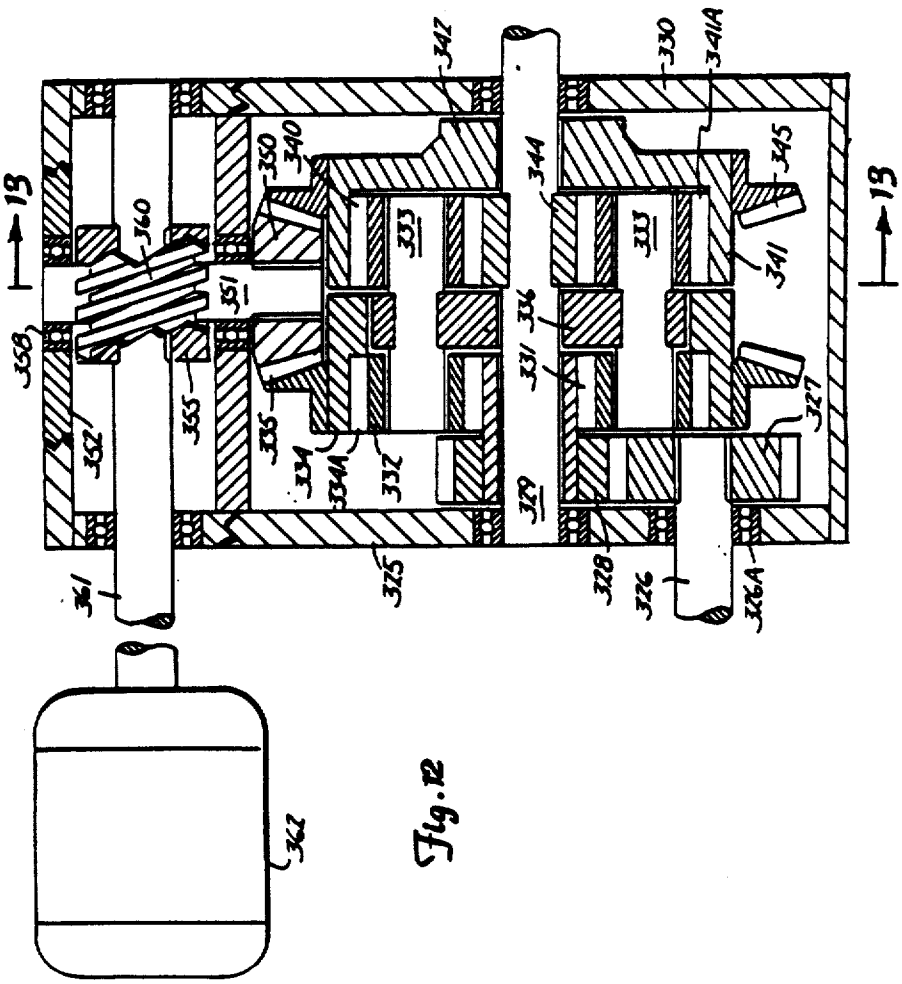
13
13
342
330
341A
350
340
344
345
360
333
333
341
351
336
358
331
355
327
352
335
334
334A
332
329
325
328
326
326A
361
362

Fig. 12

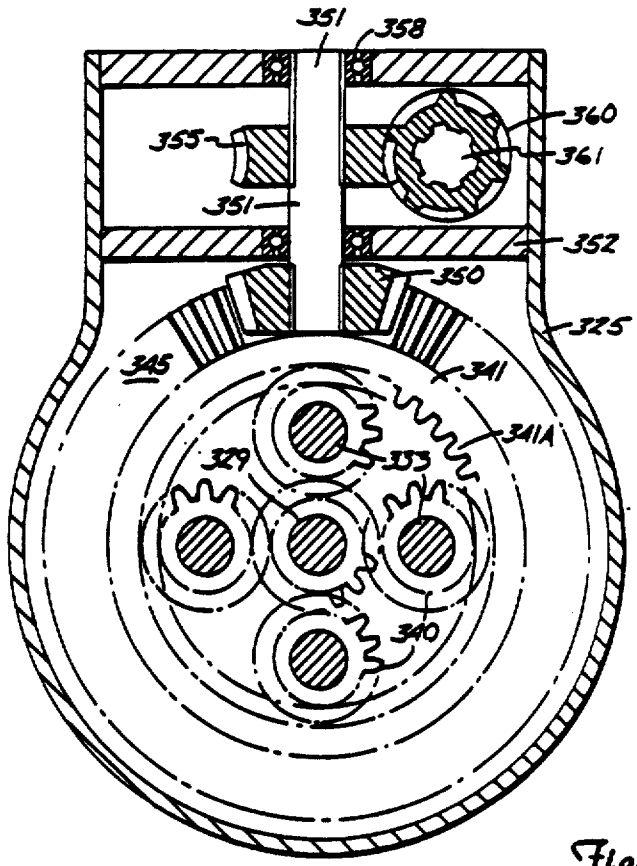

Fig. 13

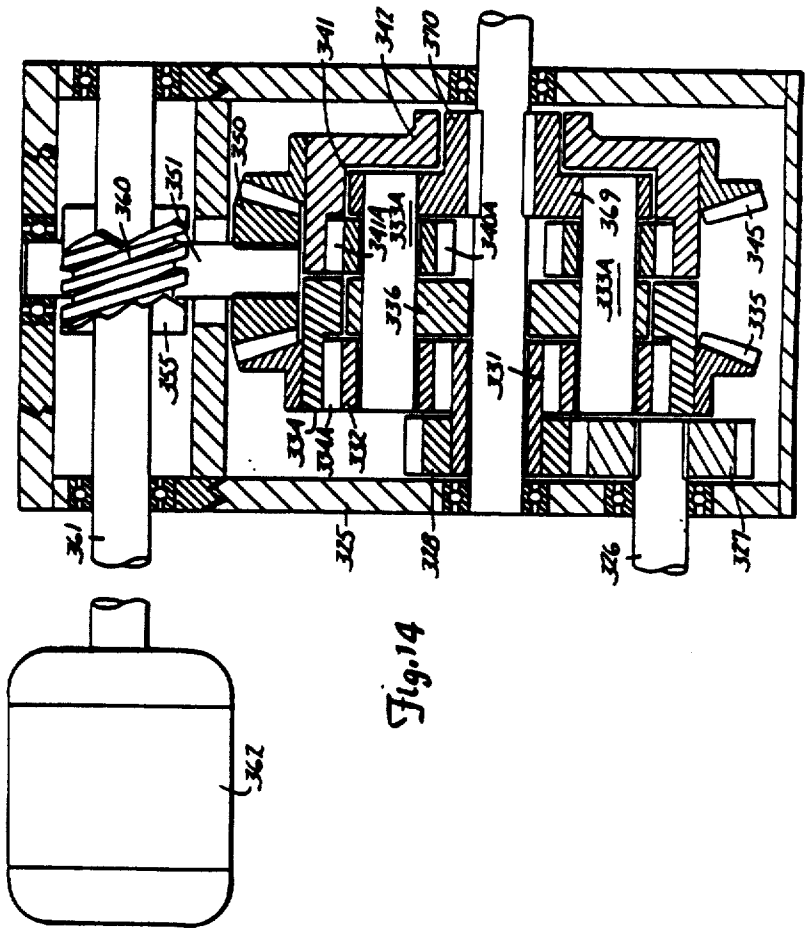
341
342
370
350
351
360
341A
333A
340A
369
345
336
333A
335
355
331
334
334A
332
361
325
328
326
327
362

Fig.14

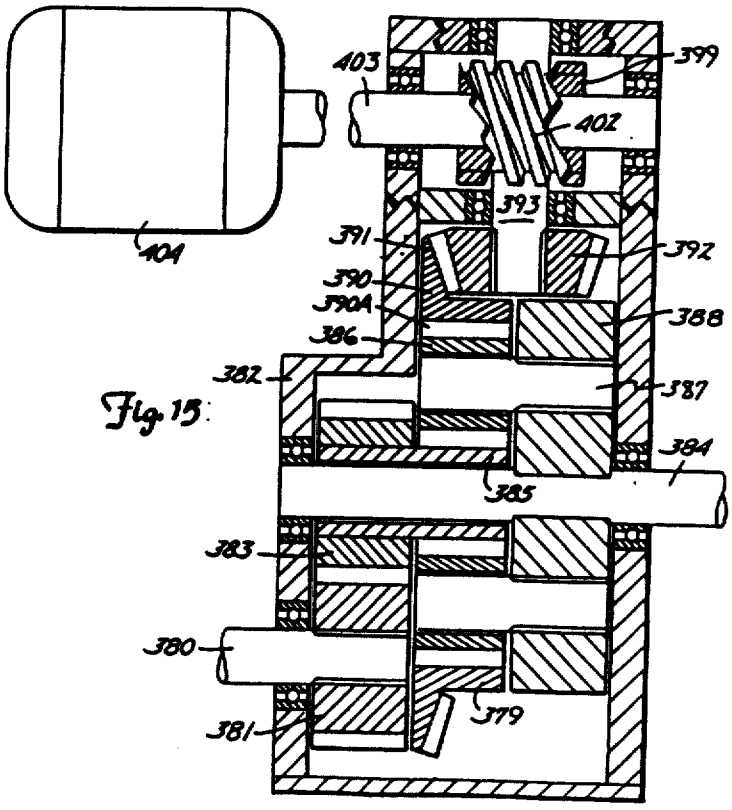
403
399
402
393
391
392
390
390A
388
386
382
387
384
385
383
380
379
381
404

Fig. 15

CONTINUOUSLY VARIABLE TRANSMISSION AND TORQUE RETAINING DIFFERENTIAL

Matter enclosed in heavy brackets [ ] appears in the original patent but forms no part of this reissue specification; matter printed in italics indicates the additions made by reissue.

CROSS REFERENCE TO RELATED APPLICATION

This application is a continuation-in-part of my co-pending application Ser. No. 881,827, still pending, filed July 3, 1986 for TORQUE RETAINING AND PROPORTIONING DIFFERENTIAL DRIVE ASSEMBLY.

BACKGROUND OF THE INVENTION

1. Field of the Invention.

The present invention relates to continuously variable drive trains especially useful with torque proportioning differential drives.

2. Description of the Prior Art.

Various work has been carried out on continuously variable transmissions that provide higher gas mileage, and better acceleration than conventional automatic transmissions, without any bumps or jerks when shifting. Many of the continuously variable transmissions (CVT) are now on sale, and in the June, 1984 issue of Popular Mechanics, in an article entitled "Get Ready For a New Kind of Automatic Transmission," by Lamm, pp. 70, 71, 105–108, a discussion of such transmissions is presented and a cutaway illustrative showing of a transmission used by Fiat is included. Further, the v-belt type transmission used by Volvo is illustrated in the article.

The desirability of torque retaining and proportioning differential drives also has been recognized, and combining continuously variable transmission with a torque retaining and proportioning differential drive assembly provides not only smooth operation, but insures that the torque that is transmitted through the continuously variable drive train will be proportioned to the appropriate wheels.

SUMMARY OF THE INVENTION

The present invention relates to a continuously variable transmission that utilized a simple controlled gear system for permitting varying the output drive ratio of differential or planetary gearing as a function of engine speed, load or even as a function of manual signals, in a relatively low-cost assembly. An external motor is used for controlling the final drive ratio, and actually controls the relationship of a final gear cluster housing that can be either a bevel gear cluster or a planetary gear cluster, so that instead of having a fixed final drive ratio, the ratio can be varied, depending upon the changes that are put in by the drive for the gear housing.

The concept of providing the continuously variable output drive train is applicable to a wide variety of output differentials but is particularly adapted for use with a torque proportioning differential drive. The continuously variable transmission can be applied to either a single intermediate differentiating gear assembly, or can be applied to a mid-differential when four-wheel drive operations are desired. The continuously variable transmission also can be used without a differential drive, as for a drive transmission for small vehicles such as motorcycles, ATV's or snowmobiles, if desired, and of course by varying the gear ratios of the drive gears, substantially any desired relationship can be arrived at for adequate torque carrying capacity and final drive ratio.

When used with the torque proportioning differential drive, as disclosed herein, the assembly is compact, provides very substantial control over the operation of the vehicle.

The gear drive eliminates the problems that are inherent in use of belt drives as in some of the other continuously variable transmissions, and yet gives the advantages of being simple, and easier to manufacture and to repair than conventional automatic transmissions which have become highly complex in recent years, especially the new models with lock-up torque converters, four speeds and overdrive gearing. The disclosed continuously variable transmission can be made very compact, so it takes up less space than today's typical automatic transaxle, and it is lighter weight because of its simplicity and compactness.

The continuously variable transmission can be stepless, so that no jerks are noticed as it moves through an infinity of gear drive ratios, and it can deliver better fuel mileage or economy than a conventional automatic transmission. It can carry a great span of gear ratios and can be operated or controlled by existing microprocessors now used on automobiles, and which also have a plurality of sensor inputs relating to sensed engine speed, load, torque and other operating factors.

The torque retaining and proportioning differential drive assembly with which the continuously variable transmission is disclosed as operable, utilizes a pair of output shafts from the gear train which are coupled through worms on each of the output shafts, which are joined or coupled through a single worm gear, which will control the differential rotation between the output shafts as a function of torque. The torque retaining and proportioning drive will prevent the torque thrust from one of the output drive shafts that has greater torque load from speeding up the power shaft on the poor traction or low torque output side during both differentiating and non-differentiating drive. Yet, it will permit differential drive needed during turning an automobile, and at the same time will provide the continuously variable gear ratio function for the output shafts.

The gear drive assemblies shown in this application can be made compact and use standard gear components, bearings and the like. The control motor can be a reversible high torque electric motor, such as that shown in the August, 1986 Popular Science at page 78, as being made by Unique Mobility of Denver, Colo. Additionally, hydraulic control motors can be used, as well.

BRIEF DESCRIPTION OF THE DRAWINGS

FIG. 1 is a side elevational view of a schematically shown engine and transmission, and showing a rear drive torque proportioning differential arrangement with parts in section and parts broken away;

FIG. 2 is a top part sectional view of the differential and rear drive of FIG. 1;

FIG. 3 is a sectional view taken along line 3—3 in FIG. 1;

FIG. 4 is an enlarged view of the differential portion of FIG. 2 with parts in section and parts broken away;

FIG. 5 is a sectional view taken on line 5—5 in FIG. 4;

FIG. 6 is a top plan sectional view of a modified differential such as that shown in FIG. 1 including a continuously variable transmission gear arrangement made according to the present invention, and;

FIG. 7 is a sectional view thereof taken as on generally a long line 7—7 of FIG. 6;

FIG. 8 is an isometric view of the device shown in FIG. 6;

FIG. 9 is a modified top plan sectional view of a second form of the continuous variable transmission utilizing planetary gearing for the gear set;

FIG. 10 is a sectional view thereof taken substantially on line 10—10 in FIG. 9;

FIG. 11 is an isometric view of the device of FIG. 9;

FIG. 12 is a side sectional view of a further modified form of the invention showing a split planetary drive for a single output shaft application;

FIG. 13 is a schematic front sectional view thereof taken substantially on line 13—13 of FIG. 12;

FIG. 14 is a side elevational view similar to that of FIG. 12, and showing a further modified planetary continuously variable transmission made according to the present invention; and

FIG. 15 is a still further modified form of the invention utilizing a single output shaft with a single planetary drive.

DETAILED DESCRIPTION OF THE PREFERRED EMBODIMENTS

The torque proportioning differential drive shown in a simplified, two-wheel drive embodiment is illustrated in FIGS. 1-5.

The torque proportioning differential drive as will be shown uses parallel, independent output shafts which drive the rear or front wheels independently, so that there are parallel power paths where the power is divided for the final drive. In an embodiment used in connection with four wheel drive vehicles the torque proportioning differential is used in a mid-differential drive for driving forward and rear differentials that then drive the axles to the drive wheels. As shown in FIG. 1, an engine and transmission indicated schematically at 15 has a transmission output shaft 16 that is a normal drive output shaft from a transmission having suitable gear ratios. The engine and transmission can be conventional, either manual shift or automatic, and the output shaft 16 has a spur gear 17 drivably mounted thereon, which in turn will drive the output drive components. In the embodiment shown in FIG. 1, it is to be understood that the intermediate gear assemblies can be modified to obtain the desired gear ratios, and may not even be used if desired so that a direct drive to the differential components can be made from the transmission output shaft. Intermediate gear cases may be used, if desired, as well.

However, as shown, a spur gear drive, which can have interchangeable size gears, is shown generally at 20 and it is fixed to the transmission housing. The term spur gear is intended to include gears with angled teeth or actual helical teeth on the gears, but with parallel mounting shaft axes, as gears are now made for noise reduction. The gear drive 20 has an outer housing 21 that mounts a first idler gear 22 that meshes with gear 17 and rotates on its outer periphery as shown in FIG. 1 in direction of the arrow 22A. This gear is suitably mounted on a shaft that rotates in bearings in the housing 20 in a conventional manner.

Gear 22 in turn drives a spur gear 23 that is drivably mounted onto a drive shaft 24. The drive shaft 24 is mounted on suitable bearings 25 in the gear case 21, and also passes through the rear wall of this gear case 21 and through a forward wall 27 of a differential drive gear case indicated generally at 26. The forward wall 27 of the gear case 26 has suitable bearings for mounting the shaft 24, and as stated the gear 23 drives the shaft 24 which in turn is driven through a spline or suitable member to drive a spur gear 30 (see also FIG. 3) that is mounted inside the differential housing 26. The spur gear 30 as shown in this form of the invention is at the lower side of the differential housing 26. Gear 23 is rotated in direction that is indicated by the arrow 31 (FIG. 1), and gear 30 thus also rotates in this same direction as indicated by the arrow 32. Arrow 32 is also shown in FIG. 3.

The gear 30 as shown in FIG. 3 drives a pair of power dividing spur gears 35 and 36, respectively. The spur gears 35 and 36 comprise power input gears to a pair of differential bevel gear drive clusters indicated generally at 37 and 38 (FIG. 2), respectively. These drive clusters 37 and 38 are identically constructed, as are the differential drive gear clusters in other forms of the invention, but in this form of the invention the gears will be separately numbered, even though they operate in precisely the same manner for the output drive.

The first input drive spur gear 35 is splined onto, or otherwise drivably attached to a first bevel gear 41 forming a portion of the differential drive cluster 37. The bevel gear 41 and its spur gear 35 are rotatably mounted onto a first output shaft 42 which is of a pair of parallel drive shafts. The shaft 42 comprises one of the parallel power paths that is used with the torque proportioning differential drive.

The gear 36 in turn is splined or otherwise drivably attached to a bevel gear 43 (FIG. 2). The spur gear 36 and bevel gear 43 are both rotatably mounted onto a second of the parallel drive shafts indicated at 44. The output drive shafts 42 and 44 are identically constructed as well.

The rotatable mounting of the spur gear and bevel gear set 35 and 41 for the cluster 37 on shaft 42 and the spur and bevel gear set 36 and 43 for the cluster 38 on shaft 44 shows there is no drive directly from these gears to the parallel output shafts 42 and 44.

The shafts 42 and 44 have first end portions rotatably mounted on suitable bearings 45 and 46 in the front wall 27 of the differential housing or case 26. The bearings 45 and 46 preferrably are tapered roller bearings that take both end thrust and radial loads, although the bearings are shown only schematically. The shafts 42 and 44 have output end portions rotatably mounted in suitable bearings 51 and 52, respectively at the rear wall 53 of the differential case. These bearings also can be taper roller or similar bearings that carry both thrust and radial load.

The shafts 42 and 44 each include spiders of four radial shafts or cross shafts fixed to shafts 42 and 44 to rotatably support spider bevel gears, as perhaps best seen in FIG. 2. The radial shafts or cross shafts on shaft 42 are shown at 42A and each are 90° from adjacent shafts. The parallel output shaft 44 has radial shafts or cross shafts 44A thereon.

FIGS. 3 and 4 show the details of the gear clusters 37 and 38, and the positioning of the radial or cross shafts

holding the differential drive orbiting spider bevel gears.

In the gear cluster **37**, four orbit spider bevel gears **55** are mounted onto the respective cross shafts **42A** on suitable bearings, so that the bevel gears are freely rotatable on the cross shafts **42A**. These bevel gears **55** are held in place with suitable snap rings on the cross shafts, and engage the bevel gear **41**. Further, the gear cluster **37** includes a control bevel gear **57** rotatably mounted on the shaft **42** on an opposite side of the cross shafts from gear **41** and engaging the bevel gears **55**. This control bevel gear **57** is controlled to be nonrotatable except when differential speeds are required. Thus, normally as the bevel gear **41** is rotated, the gears **55** are driven to orbit around the gear **57** and thus drive the shaft **42** through the radial shafts or cross shafts **42A**. The shaft **42** is thus rotated at a different speed from the input bevel gear **41** determined by the rotation of the control bevel gear **57**. The gear cluster **37** provides a gear ratio of 2:1, that is the output shaft **42** rotates at one-half of the rotational speed of the gear **41** where gear **57** is held.

It can therefore be seen that by controlling the gear **57** so that it is held or rotates at a controlled rate, and in a selected direction relative to the direction of rotation of gear **41** the output speed of the shaft **42** can be likewise controlled and changed.

The gear cluster **38** operates in the same way as explained for the gear cluster **37**, and includes orbiting spider bevel gears **65** mounted onto the cross shafts **44A**, and a control bevel gear **67** that is rotatably mounted on the output portion of the shaft **44**. The control bevel gear **67** is normally held from rotation until differential output speeds of shafts **42** and **44** are required. The gear **67** is controlled in the same way as gear **57**.

The control bevel gears **57** and **67** are controlled through the use of a worm and worm gear assembly indicated generally at **70** that provides proportioning of torque between the parallel power paths including the shafts **42** and **44** and as controlled by the differentiating gear clusters **37** and **38**.

Reference is made specifically to FIGS. **4** and **5**, wherein the worm gear assembly **70** includes a worm (a spiral gear) **71** that is rotatably mounted on suitable bearings **72** on the shaft **42**, and which in turn is splined as at **73** to the hub of the control gear **57**. Thus, worm **71** becomes a member that is drivably coupled to the control gear **57** and controls rotation of the gear **57**. The worm **71** engages a worm gear **75** which is rotatably mounted on a shaft **76** that is suitably supported in the differential housing **26**, as shown in FIG. **5**. The worm gear **75** is mounted on a suitable bushing **77**, and the axis of the shaft **76** is perpendicular to the axes of shafts **42** and **44**.

A second worm **78** is rotatably mounted on the shaft **44** on suitable bearings **79**, and is splined as at **80** to the hub of the control gear **67** for the second gear cluster **38**. The worm **78** also engages the worm gear **75**, on a diametrically opposite side of the worm gear from worm **71**.

The torque proportioning feature involves the worm gear **75** operating in the gear assembly **70** to engage the two worms **71** and **78**. The differential drive operates on the principle that the worm gear cannot drive a worm, but worms can drive a worm gear. Thus it is immediately apparent that the first worm **71** will be prevented from rotation by the worm gear **75** unless the worm **78** is rotating in an opposite direction, and vice versa. That is, the worm **78** will be prevented from rotating unless the worm **71** is rotating in an opposite direction so that the worm gear **75** can rotate on the shaft **76**.

The helical angle of the worm can be in the range of 12 to 30 degrees, with the angle of the worm gear being the complement of this angle. The selection of the helix angle is well within the skill of the art and can be based on engineering design decisions.

The output power in the two parallel power paths defined by shafts **42** and **44** is transmitted by the shafts **42** and **44** through suitable universal or constant velocity joint assemblies shown at **85** and **86**, respectively, to input shafts **87** and **88** of a final rear axle drive housing **89** (as shown in FIGS. **1** and **2**). Two separate bevel gear sets **90** and **91** are mounted in the housing **89**, to in turn drive the output axles **92** and **93** in a conventional manner.

The axle shafts **92** and **93** are connected to lateral axle shafts that in turn drive the wheels of a vehicle (not shown) in a normal way.

It can be seen that under normal conditions, one of the axle shafts **92** or **93** cannot turn independently of the other, because they come from a common drive and the control gears **57** and **67** are normally held, and only when the worms **71** and **78** are rotating in opposite direction so that the worm gear **75** can rotate, will differential rotational speed of the output shafts be possible.

In FIG. **6**, a modified differential drive apparatus is illustrated, and the operation is substantially the same as that insofar as the differentiating and torque proportioning of the output shafts is concerned, but in this form of the invention, a variation is made in that it is formed as a mid-differential for four-wheel drive unit, and includes one output shaft that drives rearwardly and another output shaft that drives forwardly for front-wheel drive. In this form of the invention, torque proportioning differential is operationally identical with that shown in FIGS. **1-5** and would be connected to the respective output shafts, one for front-wheel drive and one for rear-wheel drive, and each driving an output differential which would have two output shafts to drive the respective axles. This arrangement is only schematically shown in FIG. **6**. However, the concept of the arrangements for front and rear-wheel drives is shown in the previously mentioned application of which this is a continuation-in-part. It is to be understood that the continuously variable ratio transmission construction can be used with any type of differential drive, if desired, but that it is particularly useful with the torque proportioning output differentials for two or four-wheel drive vehicles.

In this form of the invention, an engine indicated schematically at **95** drives a lock-up torque converter **97** which has an output shaft **96** that drives a planetary control gear set **94** of conventional design to provide neutral, drive, reverse and park functions. The planetary control **94** drives an input shaft **98** for the disclosed continuously variable ratio transmission and mid-differential having a case or housing **106**.

The input shaft **98** is at the lower portion of the case or housing **106**, and has a spur gear **110** drivably mounted thereon that drives a pair of power dividing spur gears **115** and **116**, respectively. Gear **110** is splined or otherwise driven by the shaft **98**, for example, with Woodruff keys or the like. The drive between the shafts and gears shown herein are conventional, and if not

specifically mentioned may be splines or keys. Spur gears **115** and **116** comprise power input gears to a pair of drive control gear sets or clusters, indicated generally at **117** and **118**, respectively. The gear sets or clusters **117** and **117** are bevel gear sets and are constructed similarly to the sets shown in FIGS. **1–5**, except that in this form of the invention the continuously variable transmission features are added to a following gear cluster arrangement. However, in this form of the invention, the input drive spur gear **115** is splined onto or otherwise drivably attached to a first bevel gear **121** which is rotatably mounted onto a first output shaft **122**. This output shaft **122** extends forwardly in this form of the invention, through a front wall **107** of the case **106**, and shaft **122** is one of a pair of parallel output or drive shafts. This is one of the parallel power paths that is used with the torque proportioning differential drive, and with the disclosed continuously variable transmission. The gear **116** is splined or otherwise drivable attached onto a bevel gear **123**, and the gear **116** and bevel gear **123** are both rotatably mounted onto a second of the parallel output or drive shafts **124**.

The drive shafts **122** and **124** each are suitably mounted on bearings **125** and **126**, respectively, in the front wall **107** of the case **106**, and bearings **131** and **132** at the rear wall **133** of the case. As can be seen, the bearing **126** supports an end of the shaft **124**, and the bearing **131** supports an end of the shaft **122**, and the shafts extend in opposite directions out of the case **106**.

The shafts **122** and **124** each include spiders comprising four radial shafts or cross shafts fixed to the respective shafts **122** and **124** to rotatably support spider bevel gears, similar to that shown in FIG. **2**, and as also can be seen schematically in FIG. **8**. The four spider or cross shafts on the shaft **122** are indicated at **122A**, and each are 90° from the other. The shaft **124**, which is for the rear torque proportioning differential drive, has radial shafts or cross shafts **124A** thereon. In the bevel gear cluster or set **117** that comprises a drive control gear set, there are four orbit or spider bevel gears **135** mounted onto the shafts **122A** on suitable bearings. The bevel gears **135** are freely rotatable on the cross shafts **122A**. These bevel gears **135** are held in place with suitable snap rings on the cross shafts and engage the bevel gear **121**.

The drive gear set or cluster **117** also includes a control bevel gear **137** which is a double-faced bevel gear, having gear teeth **137A** and **137B**, so the gear **137** is common to the cluster **117** and a second ratio control gear set that will be explained. The bevel gear **137** is rotatably mounted on the shaft **122**, on suitable bearings or bushings.

The bevel gear set or cluster **118** includes orbiting spider bevel gears **145** rotatably mounted on the cross shafts **124A**, and includes a control bevel gear **147** which also is a double-ended or common bevel gear having teeth **147A** engaging gears **145** and teeth **147B** engaging a second control gear cluster mounted in series with the first cluster **118**. Gear **147** is rotatably mounted on the shaft **124**.

The rotation of the gears **137** and **147**, when controlled, either for proportioning torque through a torque proportioning worm gear assembly similar to that shown in FIGS. **1–5**, or when being controlled to provide a continuously variable gear ratio, determines the output drive ratio between the input bevel gears **121** and **123** and the output shafts **122** and **124**. The control bevel gears **137** and **147** comprise side gears for second gear ratio control gear sets or clusters **157** and **158**, respectively. These second gear clusters are also differentiating bevel gear sets, but operate in a different manner to provide for continuously varying the output gear ratio between the input side bevel gears **121** and **123** and the output shafts **122** and **124**. This ratio control is done through two separate controls, one for differential drive and the other for a variable output drive ratio.

As can be seen the gear cluster **157** includes a control gear housing assembly **159**, that comprises a central hub or spider **160** that is rotatably mounted on shaft **122** with suitable bearings. The spider hub **160** has spider shafts **170A** positioned at 90° from each other and extending radially outwardly therefrom. The spider shafts **170A** in turn mount bevel spider or orbit gears **165** thereon that engage the second section or gear teeth **137B** of the side gear **137** and which are rotatably mounted onto the spider shafts **170A**. The spider shafts **170A** have outer end tongues or lugs **170B** that have parallel sides and over which a ratio control gear drive housing section **163** is drivably mounted. The drive housing section **163** is an annular ring type housing that surrounds the spider hub **160** and shafts **170A**, and which has a central opening that is of size to fit over the spider gears **165**.

The outer surface of the gear housing section **163** is provided with spur gear teeth **164**, that extend all the way around the housing.

Additionally, the ratio control gear cluster **157** includes a differential control bevel gear **167** that operates in substantially the same manner as the control bevel gear **57** shown in FIGS. **1–5**. The control bevel gear **167** is normally held stationary, as was previously explained, except during torque proportioning or differentiating drive that can occur through the control for the bevel gear **167** to permit differential movement between the shafts **122** and **124**.

The ratio control gear cluster **150** includes a central spider hub **170** that has spider shafts **170A**, which together make a spider assembly **171** that is rotatably mounted onto the shaft **124** through a suitable bushing or bearing. The spider shafts **170A** have spider or orbit bevel gears **175** rotatably mounted thereon which are adapted to engage the gear portion **147B** of the side or control gear **147**. The spider gears **175** will rotate on the spider shafts **170A** whenever necessary because of the loads and control functions required.

The spider shafts **170A** have tongues or lugs **170B** which receive slots on the interior opening of a gear drive housing **173** that surrounds the spider assembly **171**, and which can be used for controlling motion of the spider assembly about the shaft **124**. The outer periphery of the control gear housing **173** has spur gear teeth **174** thereon.

The gear set or cluster **158** has a control bevel gear **177** on the output side thereof which drivably engages the gears **175**, and which is also rotatably mounted on the shaft **124**. Gear **177** is normally non-rotatable except in differential movements that will permit differences in rotational speed between shafts **122** and **124**, as was previously explained in connection with the worm and gear drive in FIGS. **1–5**.

The ratio control gear housing sections **163** and **173** are controlled to permit changes in rotational speed of the control gears **173** and **147**, relative to the bevel gears **167** and **177** permits providing a continuously variable ratio transmission. The control permits continuously varying the output speed of shafts **122** and **124** relative to the speed of the input shaft **98**. The rotation of the

gear housing sections **163** and **173** are controlled and adjusted through the use of a transmission control gear and motor. As can be seen in FIGS. **6**, **7** and **8**, a support shaft **180** is rotatably mounted in the transmission case generally parallel to the shaft **98**. The shaft **180** is above the gear sets **157**,**158**, while the input shaft **98** is on the lower side of the input gear sets or clusters, as shown in FIG. **3**. The shaft **180** has a transmission ratio control gear set **181** rotatably mounted thereon. The transmission control gear set includes a spur gear **162** that drivably engages both of the gears **164** and **174** formed on the outside of the gear housing sections **163** and **173**. The gear housing sections **163** and **173** are thus ring type gears of the drive control gear sets or clusters **157** and **158**. The ratio control gear housing sections **163** and **173** cannot rotate unless the gear **162** permits such movement and also rotates.

The gear **182** can control rotation of both of the drive ratio control gear housing sections simultaneously. The gear set **181** has a worm gear **183** splined to the hub thereof, or integrally formed therewith, and this worm gear **183** is drivably associated with a worm **185** that in turn is driven by the output shaft of a variable speed, reversible motor **186** that can be either a high torque electric motor, or if desired can be a hydraulic motor that is suitably controlled. The motor **186**, of course, will be mounted in a suitable bracket shown schematically at **187** to the case **106** in a conventional manner, and the output shaft of the motor can be as long as necessary to provide the necessary clearance for the various parts.

However, the variable gear ratio of the transmission can be controlled positively by operating the motor **186** and gear **182** to permit the drive ratio control gear housing sections **163** and **173** to be rotated and thus control the output drive ratio through the control gears or side gears **137** and **147**. The ratio of drive to shafts **122** and **124** through the associate spider gears and shaft changes if the ratio control gears are permitted to rotate at different speeds. The rotation of the output shafts **122** and **124** thus can be varied in relation to the speed of rotation of the gears **121** and **123** by controlling the speed of rotation of gears **137** and **147**, respectively.

The torque proportioning function between the parallel power shafts **122** and **124**, which as shown are for front and rear wheel drives, respectively, is accomplished by the use of a worm and worm gear assembly **190** which operates in exactly the same way as the worm gear assembly indicated at **70** in FIGS. **1–5**.

The differential control gear **167** of the drive ratio control cluster **157** as shown has a worm **191** that is shown only schematically in section. The worm **191** is rotatably mounted on the shaft **122** on suitable bearings or bushings, and is splined as at **193** to the differential control gear **167**. The worm lead (right or left hand) can be selected for directing the thrust in optimum direction for good engineering design. The worm **191** engages a worm gear **195** that is rotatably mounted on a shaft **196**, which is suitably mounted in the gear case. Because shaft **180** is positioned above the shaft **196**, the support for shaft **196** will come in underneath shaft **180** from the rear wall of the case, or will be made so that the shaft **180** will pass through the support.

A second worm **198** is rotatably mounted on the shaft **124** and is splined as at **200** to the control gear **177** for the second drive ratio control gear cluster **158**. The worm **198** also engages the worm gear **195** on a diametrically opposite side of the worm gear **195** from the worm **191**.

These worms and worm gear provide the torque proportioning and differential drive feature, operating through assembly **190**. The differential drive operates on the principle that a worm gear cannot drive a worm, but worms can drive worm gears. Thus, it is apparent that the first worm **191** will be prevented from rotation by the worm gear **195** unless the worm **198** is rotating in an opposite direction. This works in the inverse, as well. The torque differential caused by a tendency of one driven wheel to spin will be resisted and drive torque will be proportioned.

As previously stated in relation to FIGS. **1–5**, the helical angle of the worms can be in the range of 12°–30°, with the angle of the worm gear being the complement of the worm angle. The selection of the helix angle desired is within skill of the art, that is, it is an engineering decision.

The torque proportioning control will thus operate so that there can be torque proportioning between the shafts **122** and **124**. A rear drive torque proportioning differential indicated at **202** is connected to the shaft **124** for the rear wheel drive. The differential **202** can be the same as that shown in FIGS. **1–5**. The differential **202** will drive an axle assembly indicated at **203** that is also identical to that shown in FIGS. **1–5**.

Additionally, the output shaft **122** drives a torque proportioning differential **205** that would be the same as that shown in FIGS. **1–5** of the present invention except the direction of rotation would be selected to be appropriate for front-wheel drive, and the lead angle of the torque proportioning control worms could be changed to direct thrust from the worms in proper direction, which in turn will drive a front axle **206** that can be constructed to have steering and constant velocity joints connected to the individual wheels of the vehicle to permit the vehicle to be steered.

The transmission ratio control motor **186** is controlled by suitable controls **210** that can be microprocessor on, off, directional and speed adjustment controls responsive to input sensors such as rpm or speed sensors **211**, sensing the engine speed. The control **210** provides signals to drive the motor **186** in either direction of rotation and to vary the speed as desired, so that the output drive ratio can be changed. It can immediately be seen that by varying the rates of rotation of the drive ratio control gear housing sections for the drive ratio gear sets, the variation in the drive ratio between the input rpm of shaft **98**, and the output rpm's of shafts **122** and **124**, which comprise the parallel output power shafts, can be changed as desired, and by suitable sensors a smooth change in drive ratio can be achieved from a low gear effect to a straight through or overdrive effect.

In the form shown, with the motor **126** stopped to hold stationary the ratio control gear housing sections through the worm-worm gear arrangement, the output drive ratio is two-to-one, that is, the output shafts **122** and **124** will be rotating at one-half of the speed of the input shaft.

In a specific embodiment that may aid in understanding the operation, the input spur gear, namely the gears **110**, and also **115** and **116** are each 27-tooth 2.25 pitch diameter spur gears. The drive ratio control housing section spur gears **164** and **174** have 38 teeth, and the ratio control spur gear **182** for the drive ratio control has 22 teeth.

The side bevel gears **135, 145, 137, 147,** and **167, 177** all have 27 teeth, and the orbit or spider bevel gears **135, 145, 165** and **175** all have 18 teeth.

The drive ratio control worm gear **183** has 12 teeth, and the drive ratio control worm **185** on motor **186** is a quadruple thread 180° and 26′ helix. Both the worm gear and worm have one-inch pitch diameter and provide a six-to-one gear ratio.

The torque proportioning worm gear **195** has 18 teeth with a two-inch pitch diameter, and the worms **191** and **198** are 1.5 pitch diameter, sextuple thread worms with a 26°, 34′ helix. A chart of the gear ratios follows as Chart I:

CHART I

Gear	No-Teeth	Pitch Diameter (inches)
	Spur Gears	
110	27	2.25
115	27	2.25
116	27	2.25
164	38	3.167
174	38	3.167
182	22	1.833
	BEVEL GEARS	
121, 123, 137 147, 167, 177	27	2.25
135, 145, 165, 175	18	1.5
	DRIVE RATIO CONTROL	
183	12	1

The continuously variable transmission which is shown also is a mid-differential assembly in FIGS. **6, 7** and **8** and has a drive ratio of two-to-one. It is called a mid-differential assembly because it provides differential control between front and rear wheel drive differentials. Assuming, for example, that the torque proportioning differential **202** also has a drive ratio of two-to-one (or the front wheel drive differential also does) in an illustrative progression of the variable ratios, as shown in Chart II below. The engine input rpm at idle is assumed to be 600 rpm, and typical engine speeds are illustrated.

The ratio control worm rpm is the same as the output speed of the transmission ratio control motor **186**, which speed can be controlled by sensing the engine rpm, for example (or even manually controlled), and this, of course, can allow infinite variations in ratio including manual selection of mid-range drive ratios, and selection of higher or lower engine rpms at which the final drive ratio for cruising is reached. The drive axle rpm listed is the speed of the output drive axle, either front or rear, the two differentials each having two-to-one reduction ratio, provide a four-to-one ratio to the axles so that the output shaft driving axle assembly **203** or **206** would be one-fourth of the input rpm of the shaft **98**. The ratio between the worm and worm gear for the transmission ratio control is six-to-one, so that the ratio control gear **182** (called a pinion in Chart II) rotates at one-sixth of the worm rotation, and that also is one-sixth of the rpm of the ratio control motor **186**.

CHART II

Engine Input RPM:	Ratio Control Gear Housing RPM: (164, 174)	Ratio Control Pinion RPM: (182)	Ratio Worm RPM: (185)	Drive Axle RPM:	Final Drive Ratio:
600	300	518	3108	0	Infinite
700	285	492.1	2952.6	32.5	21.5
800	270	466.2	2797.2	65	12.3
900	255	440.3	2641.8	97.5	9.2
1000	240	414.4	2486.4	130	7.7
1200	210	362.6	2175.6	195	6.2
1400	180	310.8	1864.8	260	5.4
1600	150	259	1554.0	325	4.9
1800	120	207.2	1243.2	390	4.6
2000	90	155.4	932.4	455	4.4
2200	60	103.6	621.6	520	4.23
2400	30	51.8	310.8	585	4.1
2600	0	0	0	650	4.0
3000				750	4.0

The ground speed of the vehicle, assuming a 26 inch wheel diameter, varies, for example, from about 10 mph at 1000 rpm and the 2600 rpm ratio given would be approximately a 50 mph speed. A 300 rpm speed would be approximately 57.9 mph.

It also is apparent that the ratio control worm can be replaced with a non-slip variable speed pulley and belt, that is non-slip, by either directly driving a worm with the belt, or replacing the worm and worm gear with the belt and pulley arrangement. Belts also could be used to drive ratio control housing section **167** and **174**.

Again, the ratios in Chart II assume that both of the shafts **122** and **124** are rotating at the same speed and differentiation is not required. Differential drive is an added feature.

In a modified form of the invention which illustrates the interchangeability of the continuously variable transmission concept with or without the torque proportioning, using a gear set or cluster comprising a planet gear assembly is shown in FIGS. **9, 10** and **11**.

In FIG. **9**, an outer case **216** comprises a differential-torque proportioning continuously variable transmission assembly that has a forward wall **217** that supports an input drive shaft **213**, that includes an input drive spur gear **214**, which in turn drives input spur gears **219** and **220** which are rotatably mounted with respect to the respective output shafts **222** and **224**. The gears **219** and **220**, respectively, comprise input gears which drive through planetary type gear sets, including a drive ratio control section **225** that is associated with the output shaft **222**, and a drive ratio control section **226** that is associated with the output shaft **224**. These sections are for controlling the ratio in the continuously variable transmission arrangement shown in FIGS. **9–11**. A control gear set or section indicated at **227** is associated with the control for proportioning torque and for differentiation and is arranged with shaft **222**. A drive control gear set or section **228** is associated with the shaft **224** for controlling the differential and torque proportioning features.

The ratio control gear sets, as stated, comprise planetary gear sets with planet gears, sun gears and planet carriers that also comprise gear housing sections. The ratio control section **225** includes a sun gear **230** that is drivably coupled, either by splining or making a unit, to the spur gear **219**, and is rotatably mounted relative to the shaft **222**.

The sun gear **230** engages multiple planet gears (four spur gears as shown) indicated at **231** which are rotatably mounted onto planet shafts **232**, which shafts in turn are fixedly mounted in a planet shaft carrier **233**. The shaft carrier **233** is rotatably mounted onto the shaft **222**.

The planet gears **231** also drivably engage an interior gear **235A** having spur gear teeth formed on the interior of a ratio control planetary gear carrier housing or ring **235**. An output set of planet gears **237** are rotatably mounted on the outer ends of shafts **232** from planet gears **231**.

Additionally, the gear housing **235** for the set of planet gears has an external spur gear **240** thereon for drive ratio control purposes, for providing the continuously variable ratio control.

The planet gears **237** drivably engage a control gear **245** (a sun gear) that in turn is drivably mounted (keyed) on the shaft **222** as at **247**. Gear **248** has internal teeth **249** which are drivably engaged by planet gears **237**, as well. The control gear **248** and its internal teeth **249** comprise a part of the drive control section **227**. The control gear **248** has a hub **250** that is rotatably mounted on shaft **222** and is drivably coupled to the torque proportioning worm and worm gear differential control. The drive, when gear **248** is held from rotation, goes from gear **219** to sun gear **230**, to planet gears **231** and, if gear housing **235** is held from rotation, through shafts **232** and carrier **233** (which must rotate about shaft **222**), and then through gears **237** that react with gear **245** to drive sun gear **245** and shaft **222**.

A second ratio control section **226** is identically constructed to the section **225**, and it rotates in the same direction and is associated with the shaft **224**. It includes a sun gear **260** that is drivably connected to the input spur gear **220**, and rotatably mounted on the shaft **224**. The sun gear **260** drives multiple planet gears **261** that are rotatably mounted on planet shafts **262** that in turn are fixedly carried by a planet shaft carrier **263** that is rotatably mounted on the shaft **224** in suitable bushings or bearings. The planet gears **261** also drivably engage an internal gear **265A** formed in the interior of a gear housing **265**. An output set of planet gears **267** are rotatably mounted on the shafts **262** at opposite ends from the gears **261**.

An external ratio control spur gear is formed as shown at **270** on the exterior of the housing **265**.

The planet gears **267** drivably engage a sun gear **275** which is drivably mounted on shaft **224**. This sun gear **275** drives shaft **224** and comprises an output gear. A drive control gear **278** has internal teeth **279** which are drivably engaged by planet gears **267**. The gear **278** comprises a part of the drive control section **224**. The gear **278** has a hub **280** that is drivably mounted (splined) on the output torque proportioning and differential control worm for the shaft **224**.

The torque proportioning and differential control is shown generally at **290** and comprises a first worm **291** that is drivably mounted onto the hub **251** of the gear **248** for the drive control section **227**. The worm **291** is rotatably mounted with respect to the shaft **222**, which comprises an output shaft for a forward differential when used with a four-wheel drive unit. A suitable spacer or thrust washer **292** can be provided between the rear walls of the case **216** and the worm **291**, if desired.

Torque proportioning control for the shaft **224** comprises a worm **296** that is rotatably mounted on the shaft **224** and is splined with respect to the hub **280** of the gear **278** for the drive control section **228** that is associated with the shaft **224**. This worm **296** is spaced from the rear wall of the case **216** with a suitable thrust washer of spacer **298**.

A worm gear **299** is rotatably mounted on a shaft **300** that is suitably supported in the gear case **216**, and engages both of the worms **296** and **291**, to control differentiation or rotational movement between shafts **224** and **222** as previously explained, and also to permit drive and control proportioning of torque between the two output shafts as previously explained.

The continuously variable transmission aspects of the present invention are obtained by controlling the speeds of rotation of the ratio control gear housing sections **235** and **265**. This is done by mounting a shaft **302** above the gear housings, in suitable bearings (not shown) and including a ratio control drive gear assembly indicated generally at **303** that is rotatably mounted on the shaft **302** (the shaft **302** is mounted as shown in FIG. **6**, for example). The ratio control gear **303** includes a spur gear section **304**, and a drivably coupled worm gear **305** that either can be splined to the gear **303** or formed as a unit. The rotation of the worm gear is controlled by a worm **306** that is drivably mounted onto a shaft **307** that comprises the output shaft of a reversible, variable speed motor **308** of suitable design as previously explained. The motor **308** is positioned laterally of the case **216** and powered in a suitable manner, and by regulating the speed of rotation of the motor **308**, various drive ratios can be obtained through the planetary gear sets or clusters that can be varied in ratio as to the input and output shaft speeds.

In the specific embodiment of FIGS. **9–11**, in understanding the operation, the input spur gears, namely the gears **214, 217** and **220**, are each 27-tooth 2.5 pitch diameter spur gears. The drive ratio control housing section spur gears **240** and **270** have 44 teeth, and the variable ratio control spur gear or pinion **303** for the drive ratio control has 21 teeth.

The sun gears and planet gears **230, 231, 237, 245, 260, 261, 267** and **275** all have 12 teeth, and the internal gears **235A, 265A** in the gear housings and control gears **249** and **279** have 36 teeth.

The drive ratio control worm gear **305** has 15 teeth, and the drive ratio control worm **306** driven by motor **308** is a quadruple thread 18° and 26′ helix. The worm gear **305** has a one and one-fourth pitch diameter and worm **306** has a one-inch pitch diameter to provide a seven and one-half to one gear ratio.

The torque proportioning worm gear **299** has 21 teeth with a 2.5 inch pitch diameter, and the worms **291** and **296** are 1.5 inch pitch diameter, sextuple thread worms with a 26°, 34′ helix. A chart of the gear ratios follows as Chart III.

CHART III

Gear	No-Teeth	Pitch Diameter (inches)
	Spur Gears	
214	30	2.5
220, 219	30	2.5
230, 260	12	1.0
231, 261	12	1.0
245, 275	12	1.0
237, 267	12	1.0
235A, 265A	36	3.0
249, 279	36	3.0
240, 270	44	3.66
303	21	1.75

CHART III-continued

Gear	No-Teeth	Pitch Diameter (inches)
	WORM GEARS	
305	15	1.25
299	20	2.5
	WORMS	
306	quad-thread 18°, 26' helix	1.0
291, 296	sex. thread 26°, 34' helix	1.5

A typical progression indicating the input rpm and the rpm of the ratio control gears as well as the control electric motor rpm is reproduced Chart IV that follows. Again, electronic sensing of enginer rpm and control of the control motor rpm in other ways can allow a large variety of variations. Gear ratios shown in FIGS. **9**, **10** and **11** are set forth in Chart III, and the information of Chart IV shows the final drive ratio.

Using the continuously variabe transmission and differential shown in FIGS. **9–11** as a mid-differential, with a ratio of 1:1 using the gear sizes shown, and a front and rear differential ratio of three-to-one so that the output drive axles rotate at one-third the speed of output shafts **222** and **224**, a wide final drive ratio can be obtained by controlling motor **308** and then the ratio of the continuously variable transmission.

As shown, each ratio control gear housing (gears **240**, **270**) has 44 teeth, and ratio control pinion (spur gear **303**) has 21 teeth to give a 2.09:1 ratio. The ratio control worm (**306**) to worm gear (**305**) ratio is 7.5:1.

CHART IV

Engine Input RPM:	Ratio Control Gear Housing RPM: (240, 270)	Ratio Control Pinion RPM:(303)	Ratio Worm RPM: (306)	Drive Axle RPM:	Final Drive Ratio	Speed MPH:
600	200	418	3135	0	Infinite	0
700	186.66	390.38	2928	46.67	15.0:1	3.6
800	173.33	362.5	2719	93.34	8.57	7.2
900	160	334.6	2510	140	6.43	10.8
1000	146.66	306.7	2300	186.67	5.36	14.4
1100	133.33	278.8	2091	233.34	4.71	18.0
1200	120	250.9	1882	280	4.29	21.6
1300	106.65	223.1	1673	326.7	4.0	25.2
1400	93.33	195.2	1464	373.34	3.75	28.9
1500	80	167.3	1254	420	3.57	32.5
1600	66.66	139.4	1045	466.67	3.43	36.1
1700	53.33	111.5	836	513.34	3.31	39.7
1800	40	83.6	627	560	3.21	43.3
1900	26.66	55.75	418	606.66	3.13	46.9
2000	13.33	27.86	209	653.34	3.06	50.5
2100	0	0	0	700	3.0:1	54.1

Ground speeds can be calculated, and again using a wheel diameter of 26 inches on the vehicle, at 700 engine rpm, the speed would be approximately 3.6 mph, and at 2000 rpm, the speed would again be at approximately 50 mph.

Obtaining a higher output rpm at a lower engine rpm can be accomodated easily, by changing the ratios as desired. Again, in this form of the invention the ratio control gear arrangement can be replaced with variable pulley and belt control to eliminate the electric motor if desired.

Additionally, the continuously variable transmission can be used for a single-ended output shaft, that then could be used for driving either a front or rear differential, or this type of transmission could be used without torque proportioning, and thus could be suitable for a wide variety of vehicles including all terrain vehicles, motorcycles and the like.

FIG. **12** illustrates a first form of the single output continuously variable transmission, and includes an outer housing **325**, which has an input shaft **326** leading from a power source that drives a spur gear **327** in a normal manner. This is mounted in a suitable bearing **326A** in the front wall of the case **325**, and the spur gear **327** in turn drives a second spur gear **32b** that is rotatably mounted on a shaft **329** that extends all the way through the case and out the rear wall shown at **330**. The spur gear **328** in turn is drivably connected to a sun gear **331** that is rotatably mounted with gear **328** on the shaft **329**, and the sun gear **331** drives multiple planet gears **332** that are rotatably mounted onto planet gear shaft **333**. The gears **332** drivably engage an internal gear shown at **334A** of an outer gear housing for the gear clusters, which housing is shown at **334** and provides a housing for the gear clusters that can be controlled as to rotation for varying the output ratio between the input shaft and the output shaft. The gear housing **334** is a ratio control gear housing, or section, and has an outer large bevel gear **335** around the periphery thereof. Additionally, the planet shafts **333** are mounted fixedly in a planet shaft carrier **336** that comprises a type of spider. The carrier or spider **336** is rotatably mounted on the shaft **329** on suitable bearings or bushings. The planet shafts extend parallel to the output shaft **329**, and at the rear end thereof, that is, the end opposite from the planet gears **332**, there are second output planet gears **340** rotatably mounted on the shafts **333**. The output planet gears **340** drivably engage an internal gear indicated at **341A** of a gear housing **341** that comprises a portion of the ratio control housing, and this housing **341** is rotatably mounted on the shaft **329**, through a hub **342**. Additionally, the planet gears **340** drivably engage a sun gear or central gear **344** that is keyed to or otherwise drivably mounted on the shaft **329**. Shaft **329** then extends outwardly from the case through the rear wall **330** as previously mentioned. Of course, the various shafts have suitable taper roller bearings on them, generally.

The gear housing **341** has an outer bevel gear **345**, fixedly mounted thereon, and facing the gear **335**. The gears **335** and **345** are spaced apart so that a ratio control pinion **350** can engage both of these gears, and the pinion is mounted onto a ratio control shaft **351** that, as can be seen in FIG. **13**, for example, is suitably supported in cross members **352** of the gear housing **325**, and has a worm gear **355** drivably mounted thereon as well. The worm gear is spaced axially along the shaft **351** from the pinion **350**.

Suitable bearings shown at **358** can be used for mounting the shaft **351** in the cross members **352**. The worm gear **355** is controlled by a worm **360** that is drivably mounted onto a shaft **361** that comprises the output shaft of a ratio control motor **362**.

In this form of the invention, the drive ratios can be varied by controlling and driving the motor **362**, to turn the pinion **350** and permit the outer ratio control gear casings or housings **334** and **341** to rotate and thereby control the output ratio between the input shaft **326** and the output shaft **339**.

Using the same size sun gear and planet gears, as well as the same size spur gears **327** and **328**, a one-to-one ratio will be achieved if the outer housings **334** and **341**

are held from rotation. To bring the output shaft back to zero rpm when the engine is idling, would require a slower speed of the pinion **350** than that of a pinion **392** shown in FIG. **15**, for instance, because the two gear housings **334** and **341**, which comprise the ratio control gear housings, would be rotating in opposite directions. Thus the ratio can be changed more readily with less speed of the control motor **362**. Varying the speed of control motor **362** in response to the engine speed, which would be the speed of rotation of shaft **326**, can provide an infinite gear ratio.

FIG. **14** shows an alternative arrangement, wherein the planetary shafts shown at **333A** (the input spur gears and planet gears are identically numbered with the form shown in FIG. **12**) are carried in a second planet shaft carrier **369**, as well as carrier **336**. The carrier **369** and its hub **370** are fixedly mounted to the output shaft **329**. Gear housing **341** that has a hub **342** that is rotatably mounted on the hub **370** of the planet shaft carrier **369**.

The planet gears **340A** are merely engaged with the internal gear **341A** of the gear housing **341**, and do not engage any sun gear. Other than that, the arrangement is identical including the use of the control motor, and a ratio control pinion **350**.

In the embodiment shown in FIG. **14**, the same arrangement of the gears is as shown in FIG. **13**, and has the same size sun gears and planet gears, the resistance to rotation is provided by the pinion **350**, and the antireverse characteristics of worm gear drives, so that when the control motor is not running, the outer gear rings and gear housings will be held.

If desired, the gear housing **341** could be attached to the case, and disengaged from the pinion **350**, so there would not be any gear drive there. The arrangement shown in FIG. **14** gives an alternative or different output ratio from the form shown in FIGS. **12** and **13**. With a sun gear to annular gears (**334A**, **341A**) ratio of three-to-one, the output shaft **329** to input shaft **326** ratio is three-to-one, as well. A one-to-one ratio is obtained with the FIG. **12** form.

In FIG. **15**, a simpler version of a continuously variable ratio transmission made according to the present invention is shown. This device uses the same type of planetary gear arrangement, as shown in FIG. **13**, but has an input shaft **380** that drives a spur gear **381** on the interior of a gear case **382**. The spur gear **381** drives a second gear **383** that is rotatably mounted on an output shaft **384**. Gear **383** has a sun gear **385** drivably associated therewith for rotation with the gear **383**, relative to the output shaft **384**, and the sun gear **385** in turn drives a plurality of planet gears **386**.

The planet gears **386** are rotatably mounted on planet shafts **387** that are fixedly mounted in a planet shaft spider or hub **388** that in turn is drivably mounted on the output shaft **384**. The planet gears **386** also drivably engage sun gear **385**. The planet gears **386** also drivably engage an internal gear **390A** of ratio control gear housing **390** that has an outer bevel gear **391** thereon. Control for continuously varying the output ratio is achieved with a pinion **392** drivably mounted onto a ratio control shaft **393** that is rotatably mounted in suitable bearings on cross members in the case **382**. The shaft **393** is arranged as shown in FIG. **13**, and has a worm gear **394** drivably mounted on the shaft **393**. A worm **402** is drivably mounted onto an output shaft **403** of a control motor **404** that is the same type of motor as previously described.

By varying the speed of the control motor, the rotation of the ratio control gear housing **390** that controls the cluster gears for the planetary action through the ratio control section **379** is all that is necessary for controlling the output ratio between the input and output shafts. This version shown in FIG. **15** is simplified by reducing the number of gears, and provides for a compact continuously variable transmission that would find adaption in small vechicles such as garden tractors, all terrain vehicles, or even motorcycles. In this instance, however, in order to obtain zero output speed of the output shaft **384** when the input shaft **380** was at idling engine speed, the shaft **403** would have to rotate faster than that shown in FIG. **12**.

In this form of the invention also, the output ratio is three-to-one if the sun gear to annular gear (**390A**) ratio is three-to-one. The forms of the invention in FIGS. **14** and **15** are especially useful in motorcycle application and provide infinitly variable ratio transmission as well as a desired final drive ratio in one small package.

All forms of the invention provide an easily controlled continuously variable ratio transmission that can be adapted to a wide range of applications for motorcycles, three-wheeled vehicles and four-wheel drives, and with or without the torque proportioning features.

Although the present invention has been described with reference to preferred embodiments, workers skilled in the art will recognize that changes may be made in form and detail without departing from the spirit and scope of the invention.

While deviation from the wording of descriptions and the presentation and proportions shown in the initial informal drawings will occur as the invention is designed for specific applications, the drawings and descriptions herein are held to encompass the same and to be by way of explanation rather than limitation. Obviously, innumerable departures are possible, such as: dimensions of axles and drive shafts, shaft center distance, diametral pitch and pitch diameter of gears, helix angle of worms and worm gears, design of the outer case and assembly features; spacing, shimming, and friction reducing components; and type and number of bearings, materials, and lubrication mediums and methods. For instance, such specifics as the use of different worm and worm gear helix angles for the differentiated arrangement, with intention of enhancing differentiation under some circumstances while not interfering with retainment of torque, is an engineering design decision encompased in the claimed inventive concepts depicted and described.

What is claimed is:

1. A variable ratio transmission comprising:

first and second gear clusters;

means to rotatably mount the gear clusters about separate, parallel mounting axes for independent rotation relative to each other;

each of said gear clusters comprising a plurality of rotatable gears including an input gear rotatable about an axis coincident with its respective mounting axis, an output shaft, output gear means for driving the output shaft, and control gear means to effect a driving connection between the input gear and the output shaft through the output gear means;

means for simultaneously driving the input gears of both gear clusters; and

means for selectively and simultaneously controlling rotation of both of the gear clusters to simulta-

neously vary the effective ratio of rotation between the input gear and output shafts of both clusters through the output gear means of the clusters.

2. The transmission of claim 1 wherein said means for selectively controlling rotation of the gear clusters comprises variable speed motor means.

3. The transmission of claim 1 wherein the output shaft, the output gear means and the input gears of each cluster are coaxial.

4. The transmission of claim 1 wherein the input gear and output gear means of both clusters comprise bevel gears, said output gear means of both clusters comprising spider gears mounted on radial shafts fixed to the respective output shaft.

5. The transmission of claim 2 wherein said gear clusters both comprise planetary gear clusters, the control gear means carried on the respective clusters comprising gear teeth that engage a further gear to control rotation of the respective gear cluster [s] and vary the ratio between the input gear and the output gear means of that cluster.

6. The apparatus as specified in claim 3 wherein said input gear, said output gear means and said control gear means of both clusters comprises spur gears that are mounted on the same axis as the respective output shaft.

7. The apparatus as specified in claim 1 wherein said means for controlling rotation of the gear clusters comprises gear tooth means on the clusters and a separate control gear engaged with said gear tooth means of both clusters and independently driven by a variable speed motor.

8. A variable ratio transmission having a torque proportioning output comprising a common power input shaft driving a pair of substantially identical variable ratio transmissions and a pair of output shafts, a separate output shaft driven by each of the transmissions, each of said transmissions comprising:

a gear cluster [,] ;

means to rotatably mount the gear cluster about a separate first axis generally parallel to the first axis of the other transmission [,] ;

a plurality of rotatable gears *supported on a gear housing* including an input gear rotatable about an axis coincident with the first axis, output gear means for driving one output shaft, and first control gear means carried on the gear housing to effect a driving connection between the input gear and output shaft through the output gear means [,] ;

means for selectively controlling rotation of the gear housing to vary the effective ratio of rotation between the input gear and output shaft through the output gear means [,] ;

second control gear means mounted for rotation with respect to the output shaft, said second control gear means controlling the final ratio to the output gear means and the output shaft with respect to the speed of the input gear; and

means for simultaneously controlling rotation of each of the second control gear means comprising a pair of worms, one driving each of said second control gear means, and a worm gear common to and engaged by both of said worms, whereby each of the worms will rotate only when the other worm rotates in an opposite direction, said worms and worm gear cooperating to permit rotation of one of the second control gear means as a function of the rotation of the other second control gear means to control differential rotation of said output shafts.

9. The variable ratio transmission and torque proportioning drive of claim 8 wherein said worms are each rotatably mounted on one of said output shafts, respectively.

10. The variable ratio transmission of claim 8 wherein said means for selectively controlling rotation of each of said gear [housings] *clusters* comprises a common variable speed motor means.

11. The apparatus as specified in claim 8 wherein said variable ratio transmission comprise spur gear sets arranged as planetary transmissions, said gear housing having gear teeth therein which engage planet gears to control rotation of the planet gears relative to the output shaft.

12. The apparatus as specified in claim 8 wherein said variable ratio transmission comprises bevel gear means, said output gear means comprising spider gears mounted onto a spider fixed to said output shaft, and a gear housing carrying a plurality of second spider gears coupled to said first mentioned spider gears through a common side bevel gear engaging both sets of spider gears, and said second control gear means comprising a further side bevel gear engaging the second set of spider gears.

13. A variable ratio transmission having an output shaft and comprising:

a gear cluster;

means to rotatably mount the gear cluster about a first axis;

a plurality of rotatable gears including a bevel gear comprising an input gear rotatable about an axis coincident with the first axis, output gear means comprising beveled gears arranged as spider gears mounted on radial shafts fixed to the output shaft for driving the output shaft, and control [s] gear means carried on the gear cluster *to* effect a driving connection between the input gear and output shaft through the output gear means;

a second set of bevel gears carried by a gear housing which controls the ratio of drive between the input gear and output gear means, said second set of bevel gears being rotatably mounted on the gear housing on axes radially extending with respect to the output shaft and said gear housing surrounding [the] *a* second set of bevel gears; and

means for selectively controlling rotation of the gear housing to vary the effective ratio of rotation between the input gear and output shaft through the output gear means.

* * * * *

UNITED STATES PATENT AND TRADEMARK OFFICE

CERTIFICATE OF CORRECTION

PATENT NO. : Re. 33,278

DATED : July 31, 1990

INVENTOR(S) : Edward W. Johnshoy

It is certified that error appears in the above-identified patent and that said Letters Patent is hereby corrected as shown below:

The title page showing the illustrative figure should be deleted to appear as per attached title page.

The sheets of drawings should be deleted to be replaced with the thirteen (13) sheets of drawings as shown on the attached sheets.

Signed and Sealed this

Twenty-ninth Day of January, 1991

Attest:

Attesting Officer

HARRY F. MANBECK, JR.

Commissioner of Patents and Trademarks

United States Patent [19]

Johnshoy

[11] E **Patent Number: Re. 33,278**

[45] **Reissued Date of Patent: Jul. 31, 1990**

[54] **CONTINUOUSLY VARIABLE TRANSMISSION AND TORQUE RETAINING DIFFERENTIAL**

[76] Inventor: **Edward W. Johnshoy, R.R. #1, Box 258A, Mentor, Minn. 56736**

[21] Appl. No.: **295,289**

[22] Filed: **Dec. 30, 1988**

Related U.S. Patent Documents

Reissue of:

[64] Patent No.: **4,784,017**
Issued: **Nov. 15, 1988**
Appl. No.: **27,215**
Filed: **Mar. 17, 1987**

U.S. Applications:

[63] Continuation-in-part of Ser. No. 881,827, Jul. 3, 1986.

[51] Int. Cl.[5] **F16H 37/06; F16H 1/40**

[52] U.S. Cl. ..... **475/6; 74/665 T; 475/5; 475/7; 475/9**

[58] Field of Search ..... 74/665 A, 665 B, 665 C, 74/665 T, 715, 710, 713, 674, 675, 793

[56] **References Cited**

U.S. PATENT DOCUMENTS

633,234	9/1899	Catois	74/665 T
1,724,714	8/1929	Kersten	74/675
2,128,413	8/1938	Hejduk et al.	74/665 A
2,422,343	6/1947	Duer	74/675
2,780,299	9/1956	Egy	74/675
2,840,841	5/1958	Matson	74/713 X
2,847,876	8/1958	Willard	74/681 X
2,898,779	5/1958	Mickelson	74/715
3,013,452	12/1961	Hornbostel	75/675
3,220,284	11/1965	Horvath	74/674
3,364,789	1/1965	Whitfield	74/675
3,477,300	11/1969	Segerstad	74/675
3,788,165	1/1974	Klotsvog	74/665 C X
4,599,916	7/1986	Hirosawa	74/689
4,602,525	7/1986	Moroto et al.	74/689
4,608,885	9/1986	Koivunen	74/689
4,624,153	11/1986	Itoh et al.	74/689
4,627,308	12/1986	Moroto et al.	74/689
4,628,766	12/1986	de Brie Perry	74/691
4,630,504	12/1986	Smirl	74/689
4,633,736	1/1987	Sakakibara et al.	74/689
4,644,820	2/1987	Macey et al.	74/689
4,700,589	10/1987	Coronel	74/681 X

FOREIGN PATENT DOCUMENTS

567890	10/1957	Italy	74/675

OTHER PUBLICATIONS

Lamm, Michael; "Get Ready for a New Kind of Automatic Transmission," *Popular Mechanics*, Jun. 1984, pp. 70–71, 105–108.

Primary Examiner—Dirk Wright
Attorney, Agent, or Firm—Kinney & Lange

[57] **ABSTRACT**

A fully geared continuously variable transmission controls output ratios of differentiating gear sets by using a control gear set that is controlled as to rotation speed by a variable speed drive. The ratio gear sets can be bevel gear differentiating clusters or planetary gear sets. As disclosed, the transmission may have two sets of ratio control gears driving separate output shafts that are coupled to rotatable worms engaged with a worm gear to control differentiation between the output shafts which are used as drives for two wheel or four wheel drive vehicles at selected engine idle rpm the variable speed drive rotates the control gears at a selected speed and directs rpm, that holds the output shafts at 0 rpm. As engine rpm is increased to selected cruising final drive ratio the variable speed drive rpm is decreased proportionately to zero to change the output drive ratio continuously as a function of a selected parameter.

13 Claims, 13 Drawing Sheets

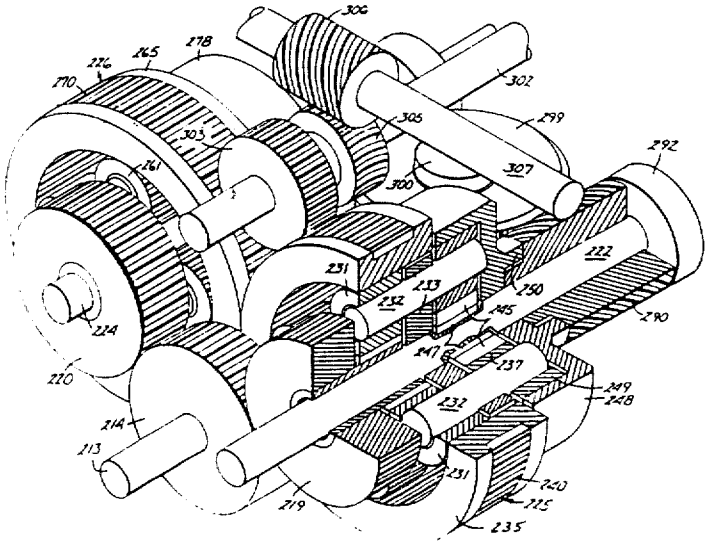

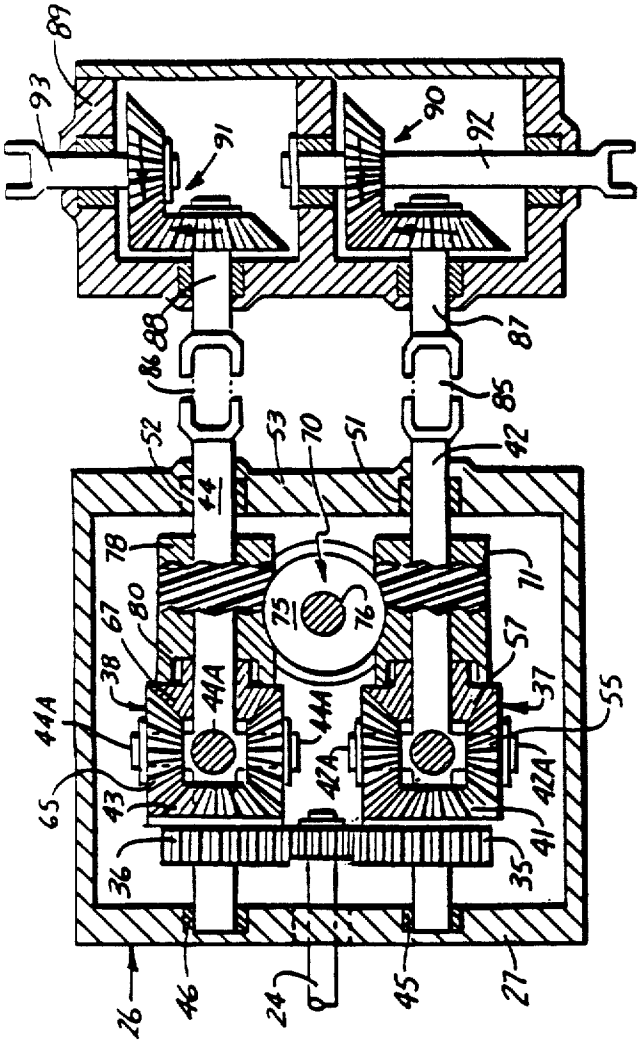

Fig.2

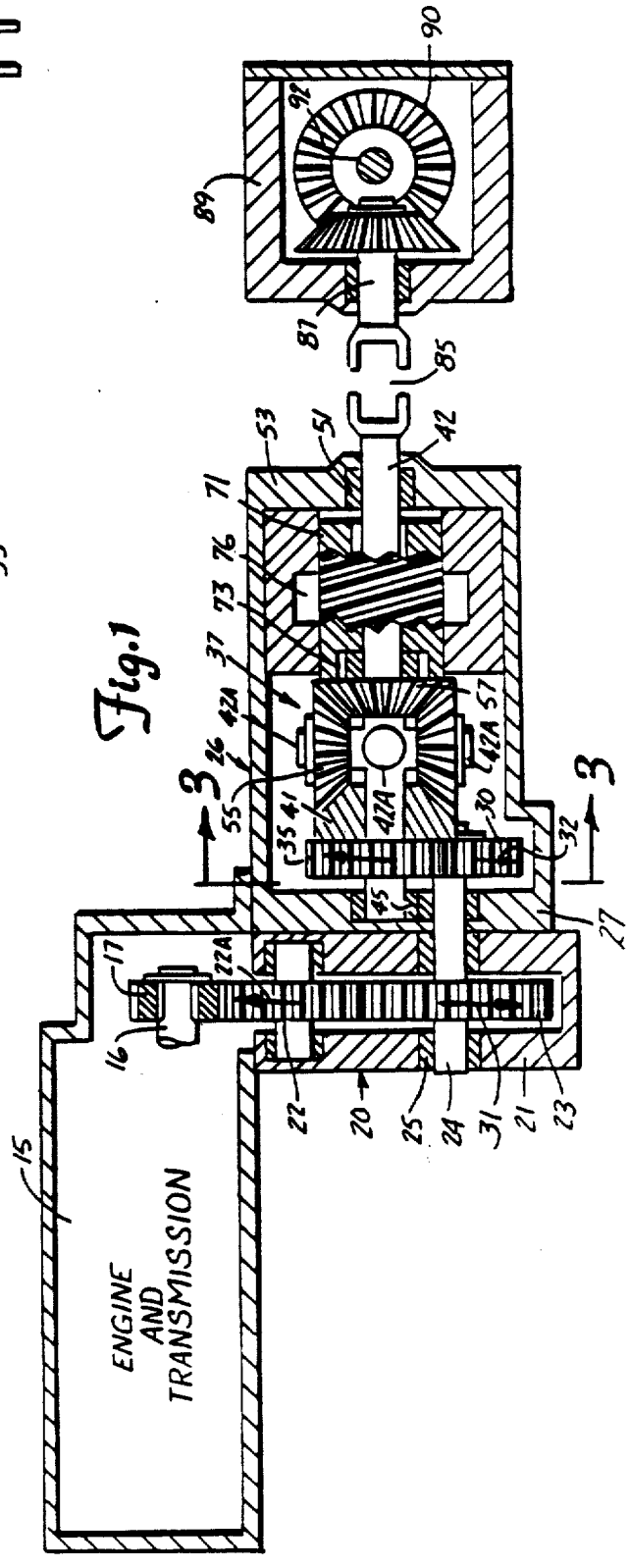

Fig.1

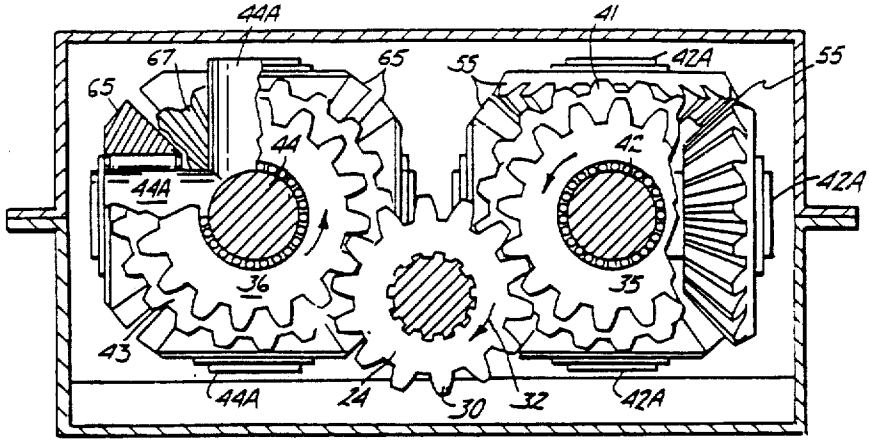
44A
41
67
65
65
55
42A
55
65
44
42
44A
42A
36
35
43
44A
24
30
32
42A

Fig.3

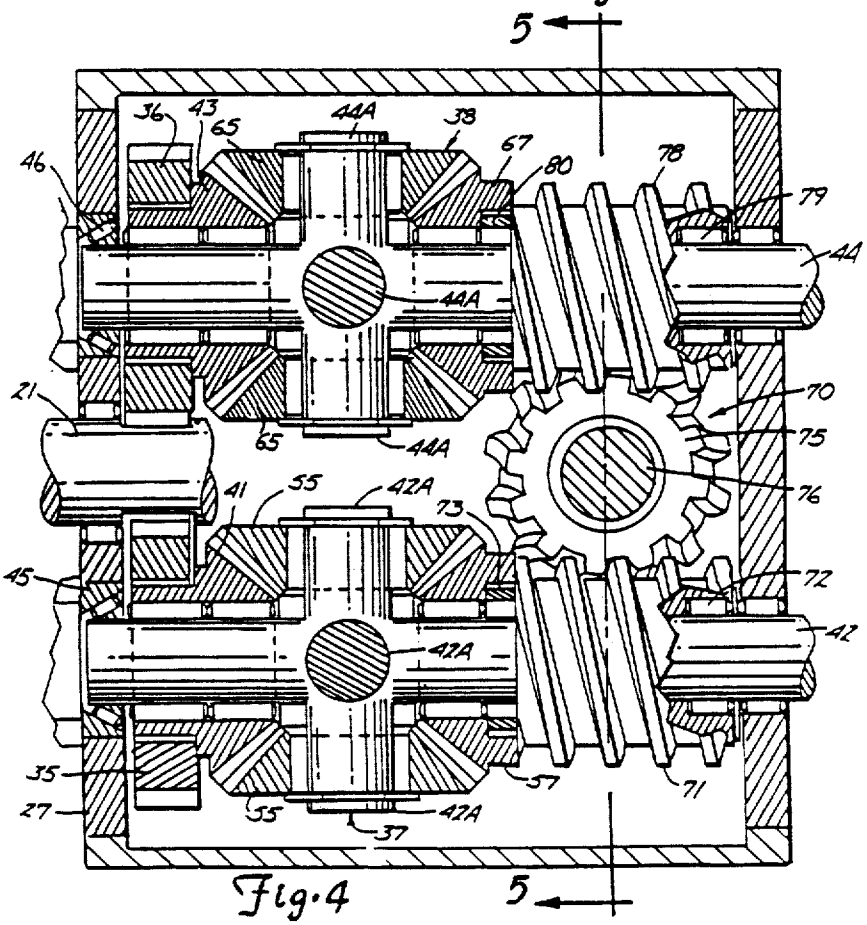
5
36
43
65
44A
38
67
80
78
79
46
44A
44A
21
70
65
44A
75
41
55
42A
73
76
45
72
42A
42
35
57
71
27
55
42A
37
5

Fig.4

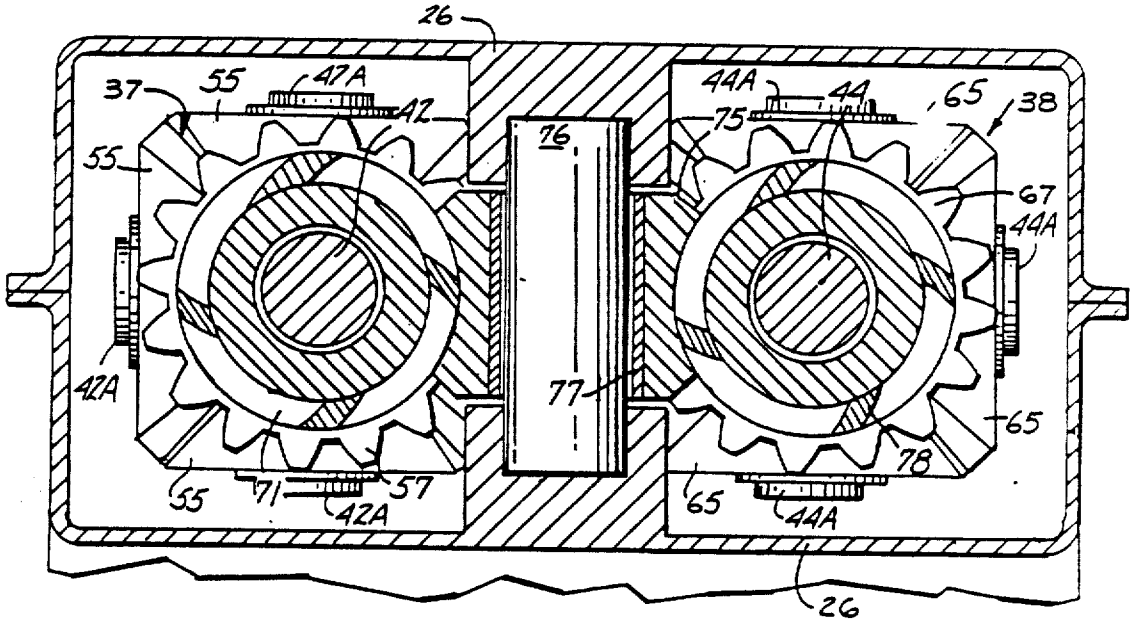
26
37
55
47A
42
55
76
44A
44
65
38
75
67
44A
42A
77
65
78
55
71
57
42A
65
44A
26

Fig.5

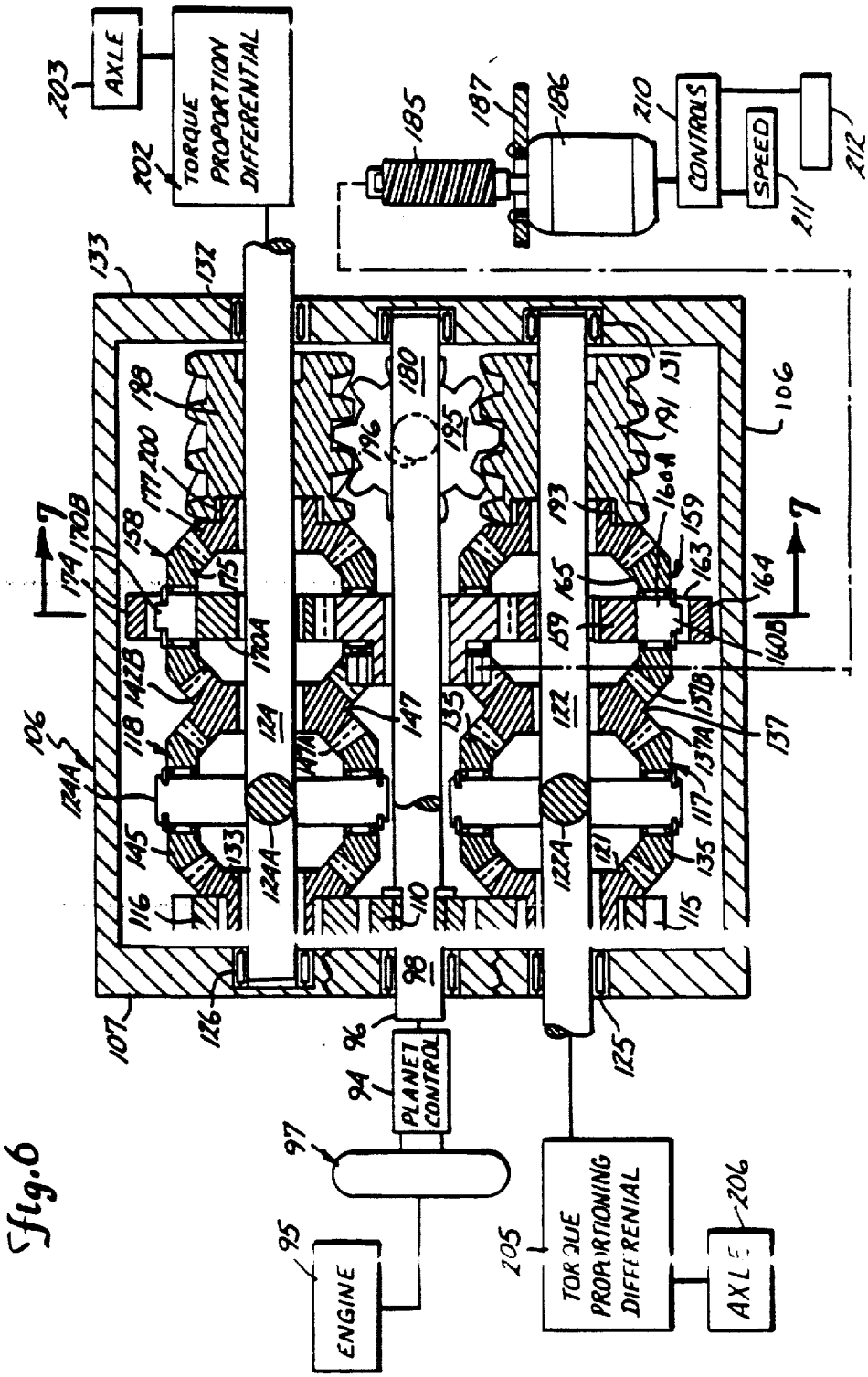
AXLE
TORQUE PROPORTION DIFFERENTIAL
CONTROLS
SPEED
PLANET CONTROL
ENGINE
TORQUE PROPORTIONING DIFFERENIAL
AXLE

Fig. 6

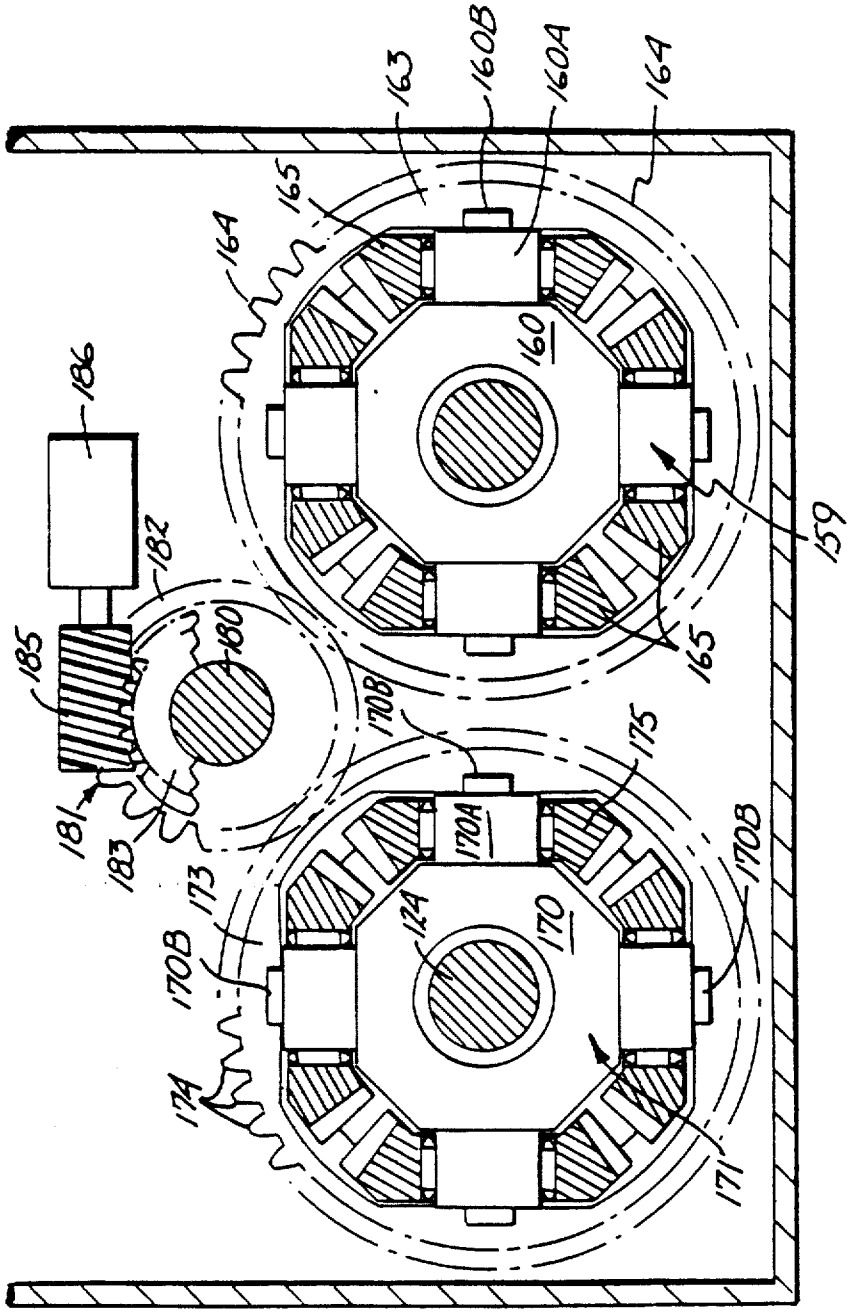
163
160B
160A
164
165
164
160
186
182
185
180
159
165
170B
175
181
183
170A
173
170B
124
170
170B
174
171

Fig. 7

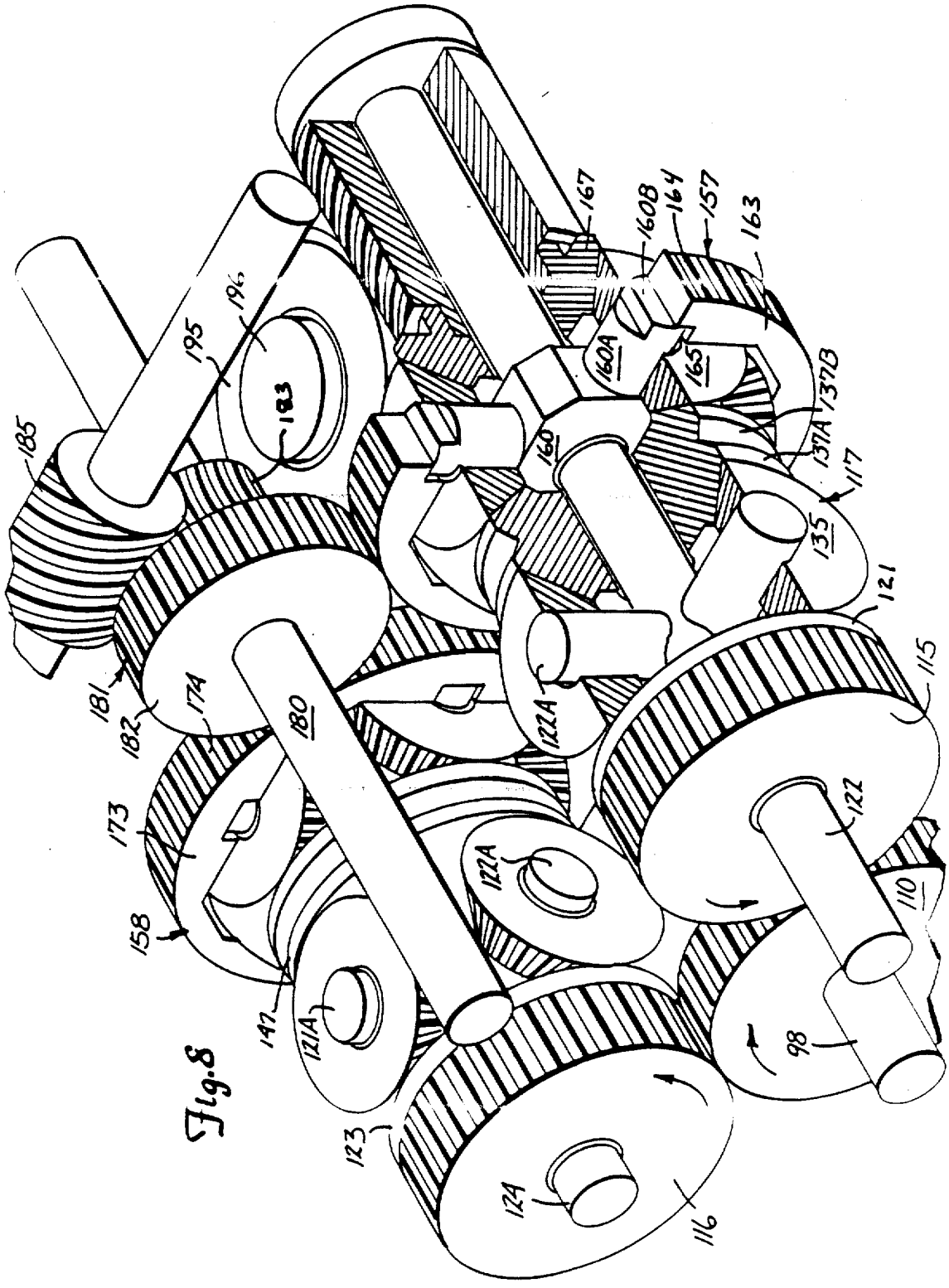
185
195
196
183
167
160B
164
157
163
160A
165
137B
137A
160
117
135
121
115
181
182
174
180
122A
173
158
147
121A
123
124
116
122
110
98

Fig. 8

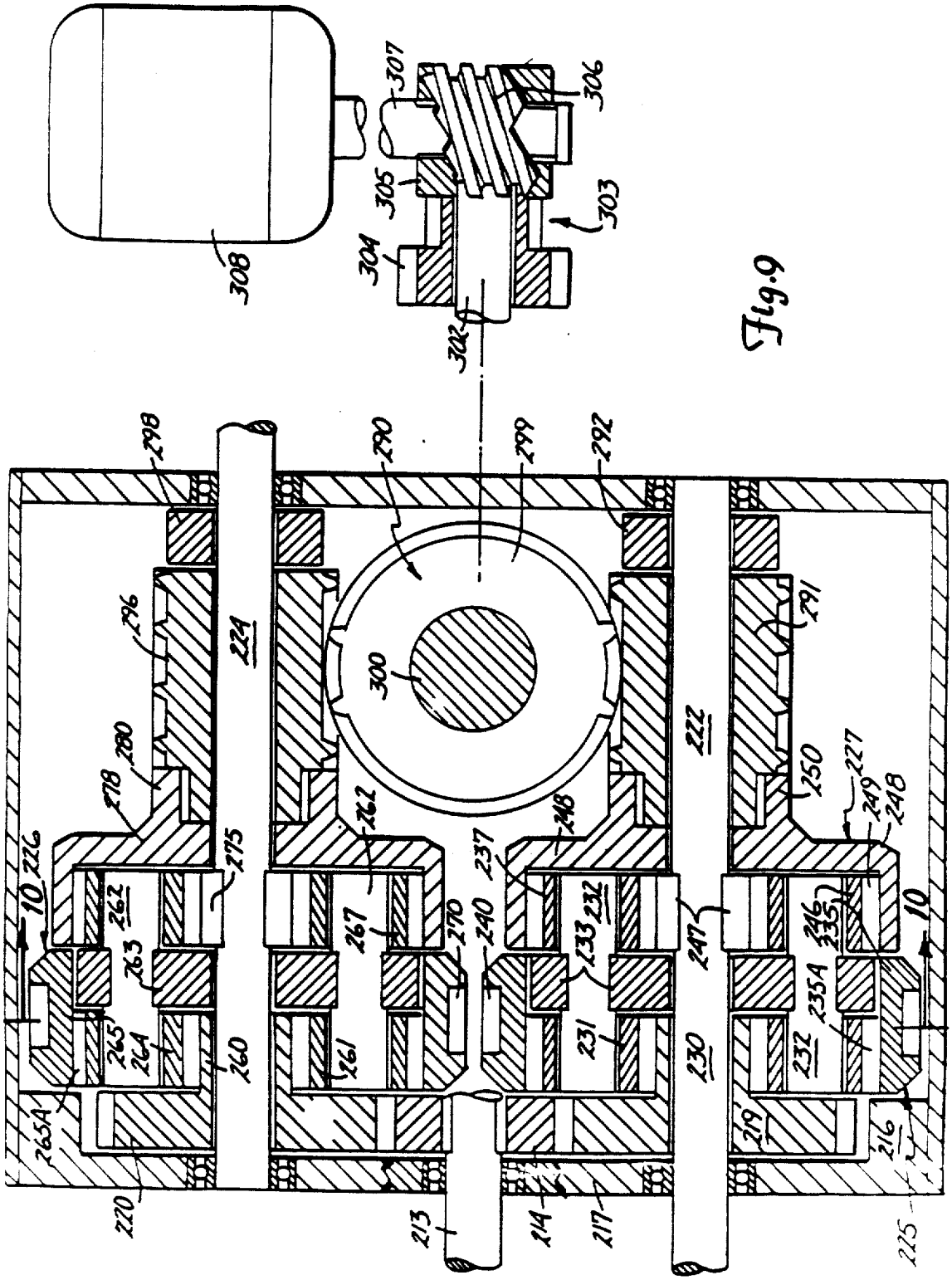
308
307
306
305
303
304
302
298
290
299
292
296
224
300
291
222
280
278
250
227
249
248
226
10
275
262
237
248
262
267
270
240
232
233
247
246
235
10
263
265
264
260
261
231
230
235A
232
265A
219
216
220
213
214
217
225

Fig.9

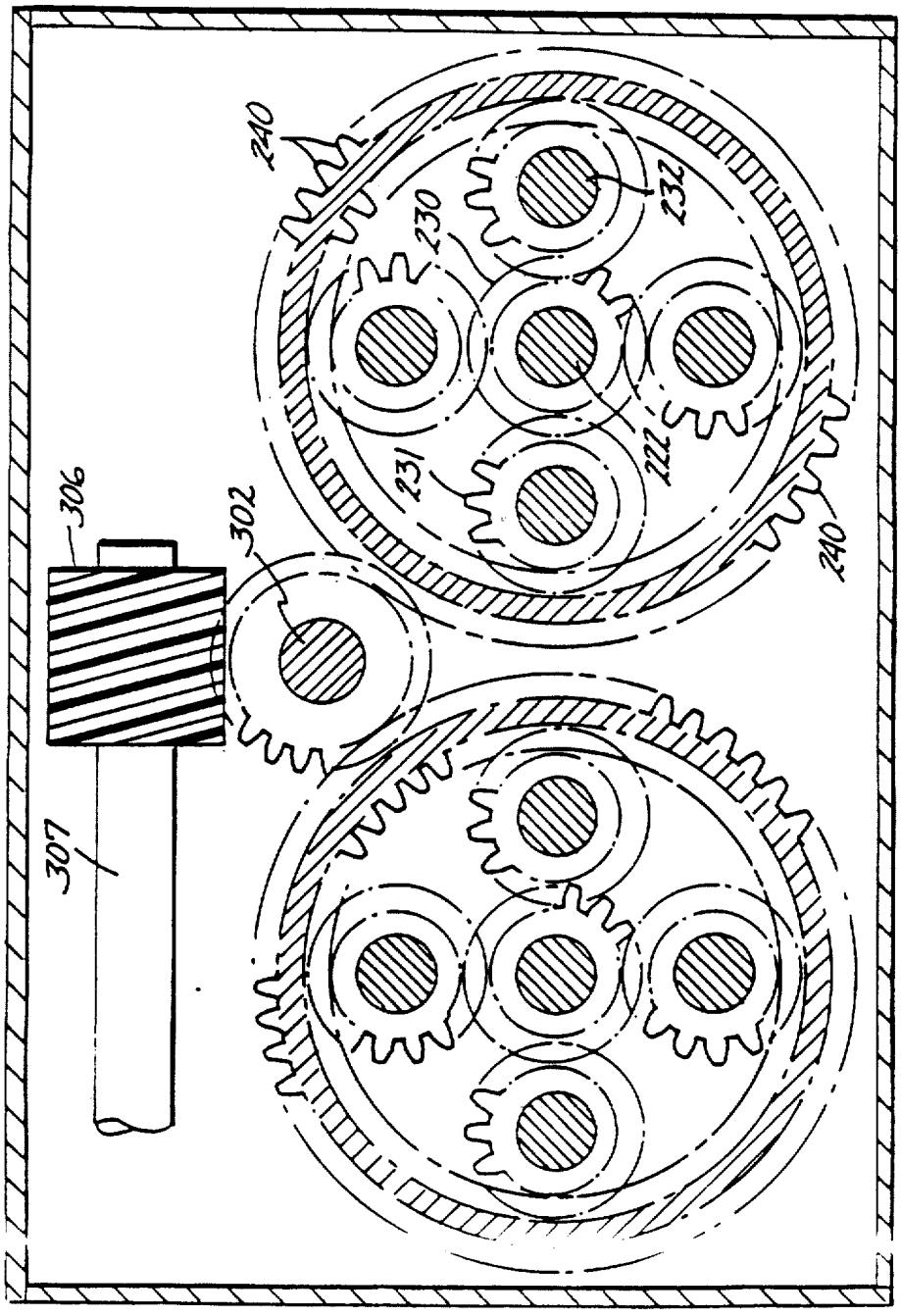

Fig. 10

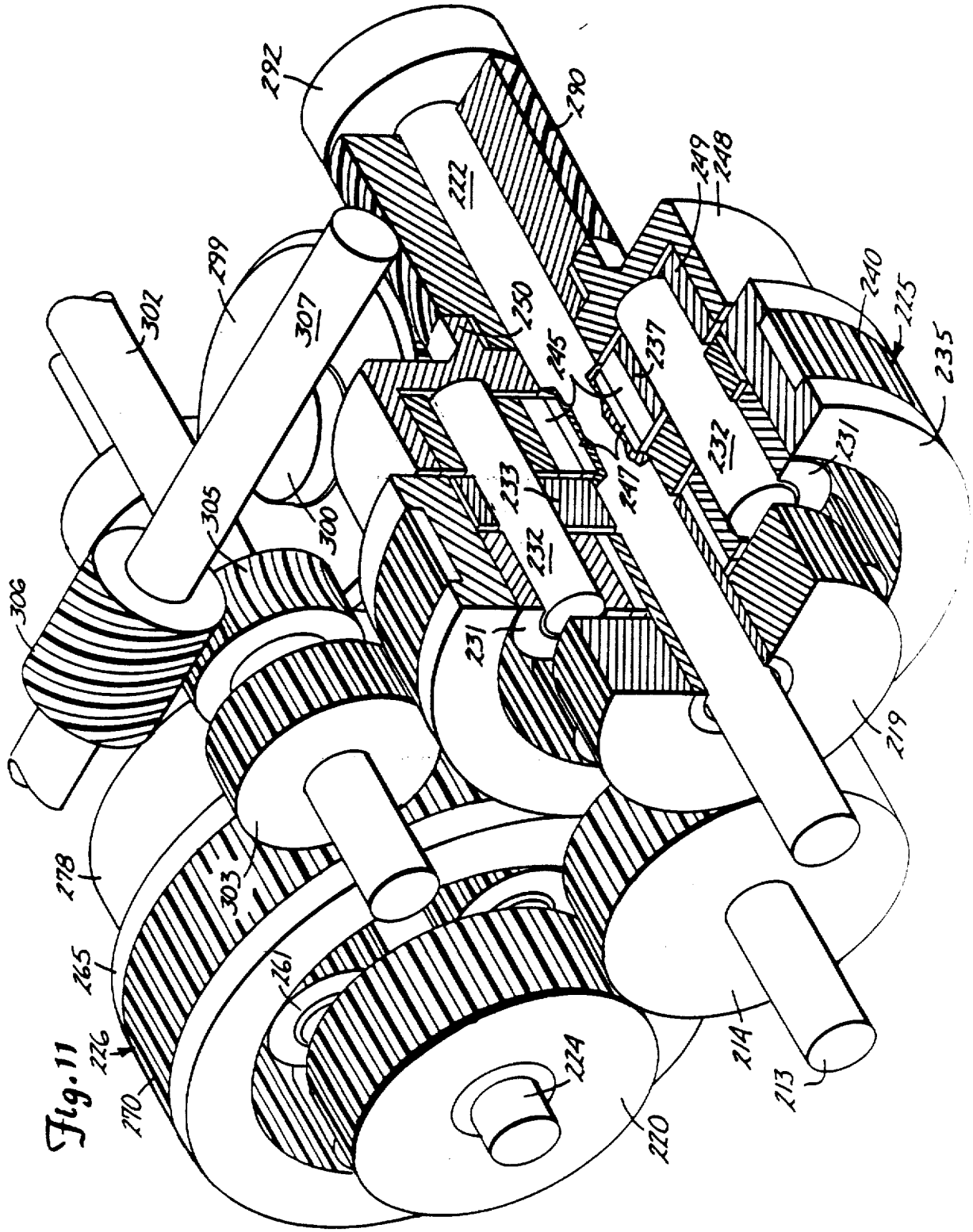
292
290
222
249
248
299
302
307
250
245
237
240
225
235
232
231
233
247
305
300
306
231
219
278
303
265
261
226
270
224
220
214
213

Fig. 11

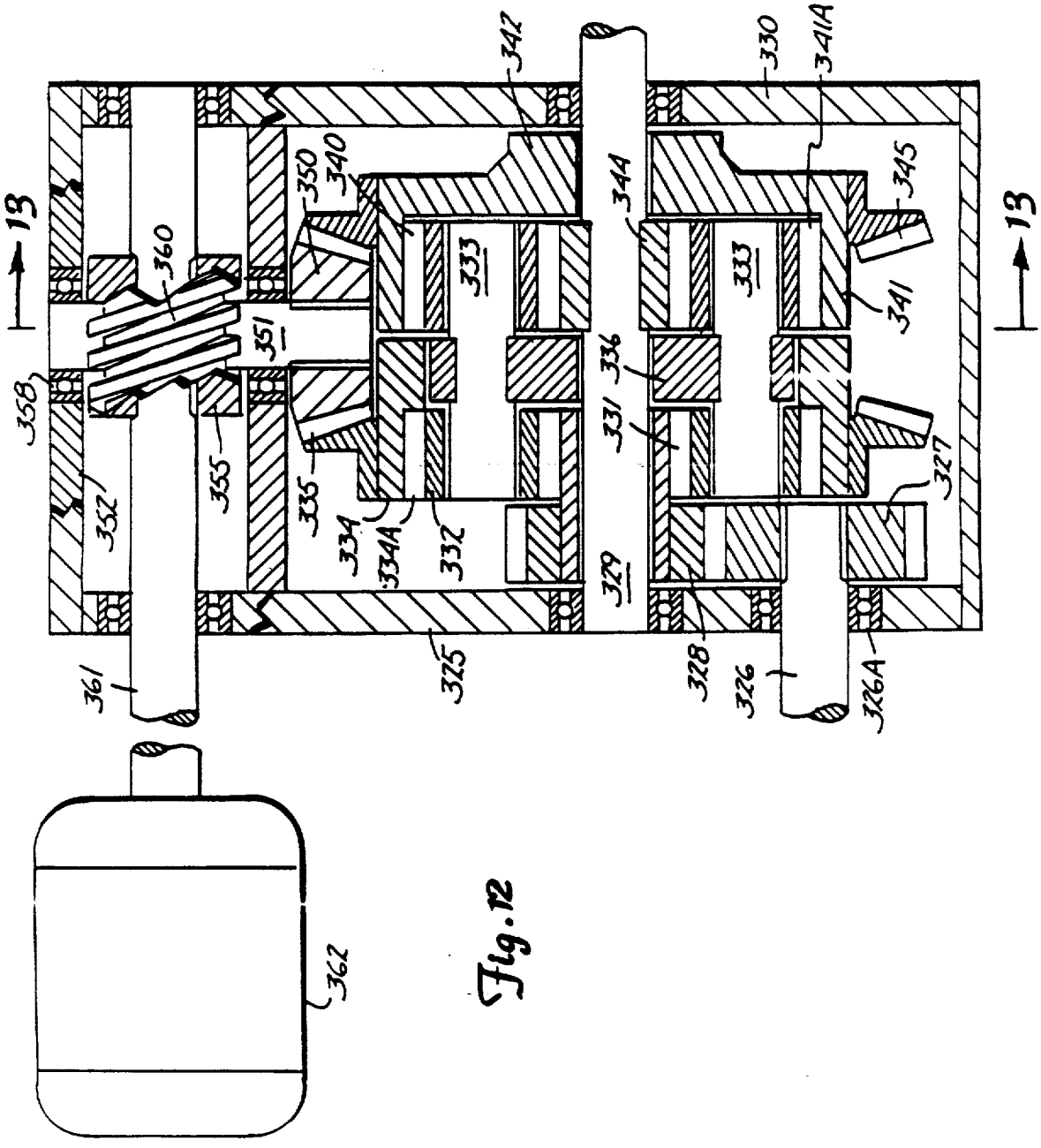
13
13
342
330
341A
350
340
344
345
360
333
333
341
351
336
358
331
355
327
352
335
334
334A
332
329
361
325
328
326
326A
362

Fig. 12

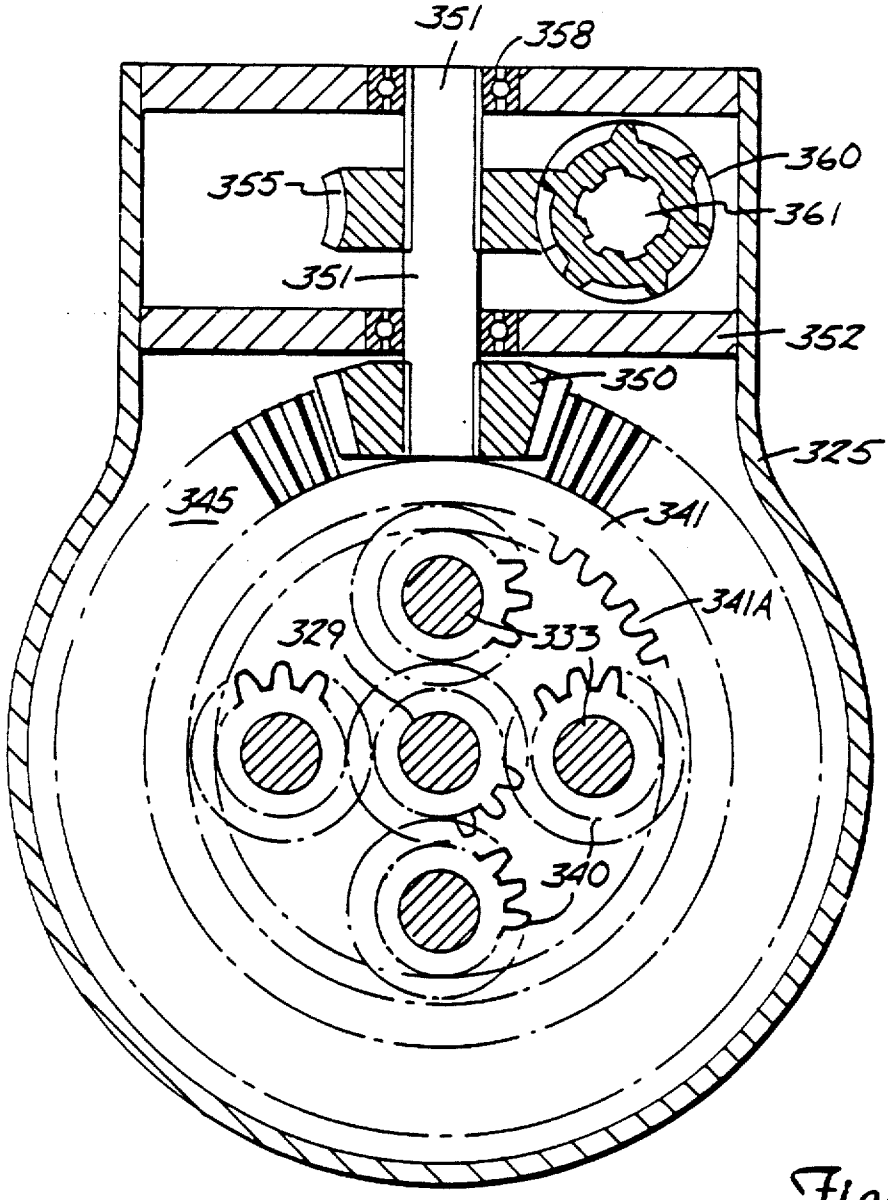

Fig. 13

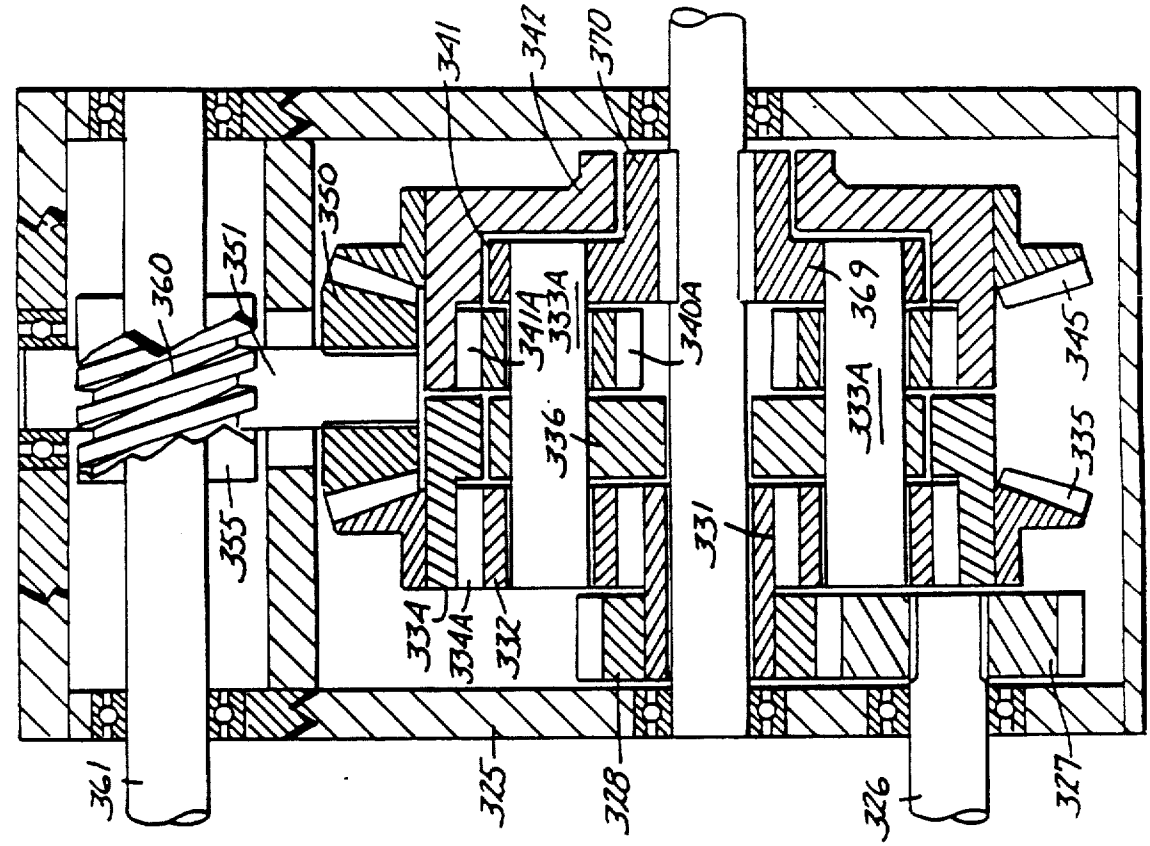
341
342
370
350
351
360
341A
333A
340A
369
345
336
335
355
331
334
334A
332
361
325
328
326
327

Fig. 14

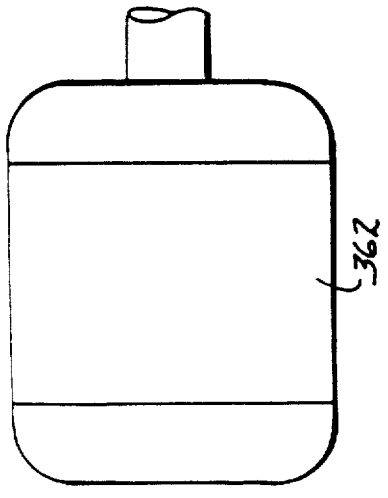
362

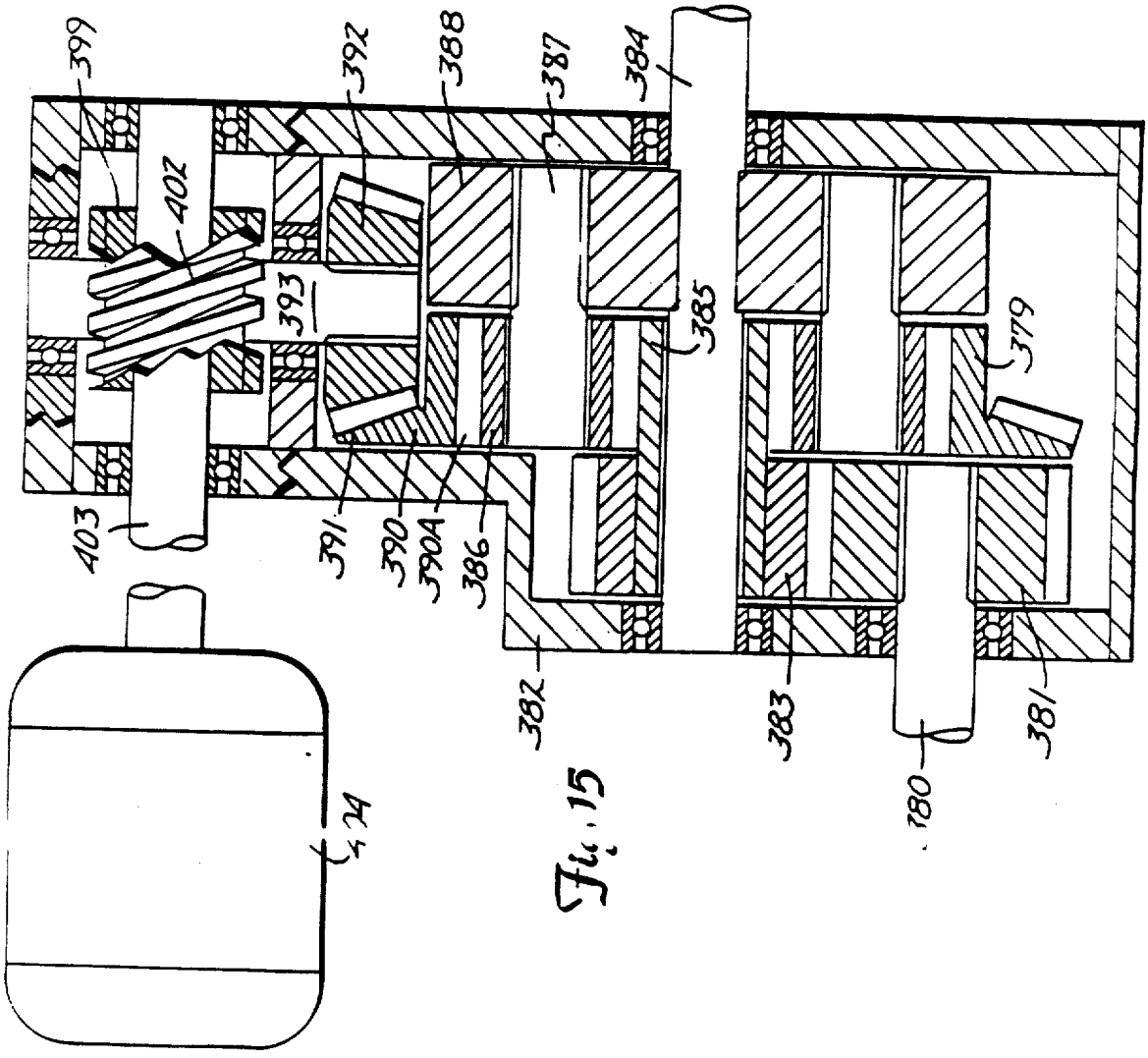
399
392
388
387
384
402
393
385
379
403
391
390
390A
386
382
383
381
180
424

Fig. 15