667888

P/00/008 28/5/91
Section 29(1)
Regulation 3.2(2)

AUSTRALIA

Patents Act 1990

NOTICE OF ENTITLEMENT

CMB INDUSTRIES, INC being the applicant/Nominated Person in respect of the Application No. 37892/93 state the following :

The Nominated Person is entitled to the grant of the patent because the Nominated Person derives title to the invention from the actual inventors by assignment.

The Nominated Person is entitled to claim priority from the application listed in the declaration under Article 8 of the PCT because the Nominated Person is the assignee of the applicants in respect of the application listed in the declaration under Article 8 of the PCT.

Dated this 18th day of December, 1995

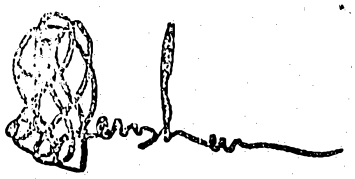

a member of the firm of
DAVIES COLLISON CAVE
for and on behalf of
the applicant(s).

PAPCB13B 1.9 PCT APPLICATION DETAILS 28/09/94 09:58:31 11

Application ID: 37892 / 93 PCT Number : PCT/US93/01958
Applicant-Name
CMB Industries, Inc.
1550 North Peach
Fresno CA 93747
United States Of America

Title : Backflow preventor with adjustable outflow direction
Priority Country Priority Date Priority App. No.
US 9 MAR 92 848574
Address-for Service :
DAVIES COLLISON CAVE
GPO Box 3876
SYDNEY NSW 2001
Date of Lodgement : 5 MAR 93

AU9337892

(12) PATENT ABRIDGMENT (11) Document No. AU-B-37892/93
(19) AUSTRALIAN PATENT OFFICE (10) Acceptance No. 667888

(54) Title
BACKFLOW PREVENTOR WITH ADJUSTABLE OUTFLOW DIRECTION

(51)[5] International Patent Classification(s)
F16K 015/03

(21) Application No. : **37892/93** (22) Application Date : **05.03.93**

(87) PCT Publication Number : **WO93/18326**

(30) Priority Data

(31) Number	(32) Date	(33) Country
848574	09.03.92	US UNITED STATES OF AMERICA

(43) Publication Date : **05.10.93**

(44) Publication Date of Accepted Application : **18.04.96**

(71) Applicant(s)
CMB INDUSTRIES, INC.

(72) Inventor(s)
CHARLES W DUNMIRE; DENNIS G WHITELAW

(74) Attorney or Agent
DAVIES COLLISON CAVE , GPO Box 3876, SYDNEY NSW 2001

(56) Prior Art Documents
AU 223587 25735/57 74.5
US 2586942
AU 3695/31 37.1 74.5

(57) Claim

1. A backflow preventer assembly comprising:

first and second backflow preventer valves;

a housing encompassing said first and second backflow preventer valves, such that both of said valves automatically close if flow through said backflow preventor assembly drops below a predetermined value, said housing including an inlet opening defining an inlet flow direction, an outlet defining an outlet flow direction and a conduit providing fluid communication between said first and second backflow preventer valves

a coupling to couple a first portion of said conduit to a second portion of said conduit;

wherein at least the first portion of said conduit is movable with respect to the second portion of said conduit in a non-screw-threaded relation only after loosening said coupling, to cause a change in said outlet flow direction with respect to said inlet flow direction to any of an infinite number of outlet flow directions in a substantially leak-free manner wherein said number of outlet flow directions lie substantially in a plane substantially parallel to said inlet flow direction.

. . ./2

8. A backflow preventer apparatus for connection to parallel, oppositely-flowing inlet and outlet conduits, comprising:

a housing configured to accommodate first and second valves, and to receive fluid flow from said inlet conduit flowing in a first direction;

a first valve mounted in said housing having a seatable valve disc having an edge, movable between a closed configuration preventing flow and an open configuration permitting flow in the absence of substantial divergent flow around the edge of said first valve disc;

a second valve mounted in said housing having a seatable valve disc having an edge, movable between a closed configuration preventing flow and an open configuration permitting flow in the absence of substantial diverging flow around the edge of said second valve disc;

said fluid flow having an average streamline path between said inlet conduit and said outlet conduit wherein the sum of changes in flow direction of said average streamline path is not substantially greater than about 180 degrees;

said first valve disc, when in said open configuration, being positioned to direct said flow from said first direction to provide flow in a second direction towards said second valve;

said second valve disc, when in said open configuration, being positioned to direct said flow from said second direction to a third direction towards said outlet conduit; and

wherein said housing is reconfigurable in a substantially leak-free manner and in a non-screw-threaded manner, only after loosening a coupling to a third configuration to cause a change in said flow from said second direction to a fourth direction, different from said third direction wherein said fourth direction is any of an infinite number of outflow directions wherein said number of outflow directions lie substantially in a plane substantially parallel to said first direction.

20. A backflow prevention valve assembly comprising:

a housing having an inlet opening and an outlet opening, said inlet opening defining an inflow direction and said outlet opening defining an outflow direction;

.../3

backflow prevention valve means disposed within said housing;

said housing comprising first and second ~~having~~ housing portions, each having a first end and a second end, said first and second housing portions being substantially adjacent and collinear; and

a coupler attached to said first and second housing portions and holding said first and second housing portions in said first relationship in a substantially leak-free manner with said second housing portion being in any of an infinite number of rotational positions with respect to said first housing portion defining an infinite number of flow directions which lie in a plane parallel to said inflow direction.

QPI DATE 05/10/93 APPLN. ID 37892/93
AOJP DATE 09/12/93 PCT NUMBER PCT/US93/01958

AU9337892

IY (PCT)

(51) International Patent Classification 5 :
F16K 15/03

A1

(11) International Publication Number: WO 93/18326

(43) International Publication Date: 16 September 1993 (16.09.93)

(21) International Application Number: PCT/US93/01958

(22) International Filing Date: 5 March 1993 (05.03.93)

(30) Priority data:
07/848,574 9 March 1992 (09.03.92) US

(71) Applicant: CMB INDUSTRIES, INC. [US/US]; 1550 N. Peach, Fresno, CA 93747 (US).

(72) Inventors: DUNMIRE, Charles, W. ; 10697 N. Lighthouse Dr., Fresno, CA 93720 (US). WHITELAW, Dennis, G. ; 3529 W. Fedora Avenue, Fresno, CA 93722 (US).

(74) Agents: HUGHES, Richard, L. et al.; Townsend and Townsend Khourie and Crew, Steuart Street Tower, 20th Floor, One Market Plaza, San Francisco, CA 94105 (US).

(81) Designated States: AU, CA, JP, European patent (AT, BE, CH, DE, DK, ES, FR, GB, GR, IE, IT, LU, MC, NL, PT, SE).

Published
With international search report.
With amended claims and statement.

667888

(54) Title: BACKFLOW PREVENTOR WITH ADJUSTABLE OUTFLOW DIRECTION

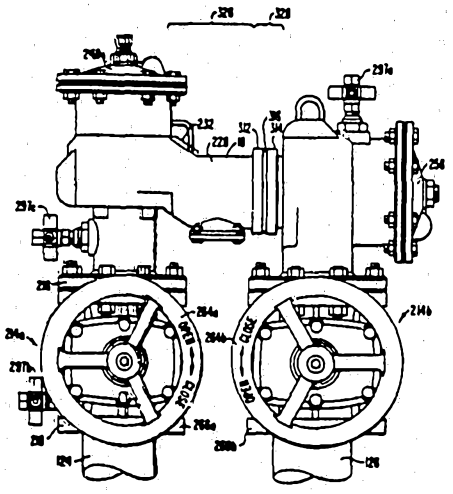

(57) Abstract

A backflow preventor which permits adjustment of the outflow direction is provided. A conduit (228) provides fluid communication between the two valves of the backflow preventor. The conduit (228) can be separated, e.g., by cutting along a groove (316), leaving annular flat regions (312, 314). The annular flats are configured to engage with a coupler to provide leak-free connection between the separated portions of the conduit. The separated portions of the conduit can be rotated to adjust the outflow direction. Preferably, an infinite number of outflow directions are possible, all of which lie in a plane parallel to the inflow direction.

BACKFLOW PREVENTOR WITH ADJUSTABLE OUTFLOW DIRECTION

This application is a continuation-in-part of Serial No. 07/650,799, filed February 5, 1991, for N-Shaped Backflow Preventor which is a continuation-in-part of Serial No. 07/435,870, filed November 13, 1989, for Check Valve with Reduced Hold-Open Pressure, to be issued as U.S. Patent No. 4,989,635 on February 5, 1991.

The present invention relates to a backflow preventor and, in particular, to a preventor with a provision for adjusting the outlet direction.

BACKGROUND OF THE INVENTION

Check valves are well known for use in assuring that a flow through a conduit occurs only in a predefined direction. Check valves are used, for example, in backflow prevention assemblies to prevent backflow of one fluid body into another. Backflow prevention is often used in connection with protecting potable water supplies from contaminants which could otherwise be introduced into it via back-siphonage or back-pressure. Many backflow preventors are designed to accommodate pressure commonly encountered in municipal water supplies, such as 150 psi (1030 kPa) or more.

Several factors are important in designing or selecting a backflow preventor for a particular use, including performance (e.g., minimizing pressure drop), serviceability, and ease and cost of installation.

Many backflow preventors are configured such that the direction of inlet and the direction of outlet flow are predetermined. In these devices, when it is desired to provide an outlet flow direction that is different (with respect to the inlet flow direction) from the predetermined direction, additional fittings such as elbows, U-joints, L-joints, T-joints and the like, must be connected. These additional fittings not only add to the cost of parts, labor and design involved in installing these devices, but also contribute to

undesirable pressure loss. These additional fittings further take up volume and thus are impractical in applications having close clearances. Such pressure loss can be particularly troublesome in applications where maintenance of pressure is important such as in fire protection systems and high rise buildings.

In previous devices, maximizing serviceability has been incompatible with also maximizing the performance and installation factors. Thus, in past devices, efforts to increase the performance and ease of installation has produced devices with decreased serviceability. Fig. 6 depicts, schematically, a previous backflow preventor 110 which attempted to provide ease of serviceability by including both valves in 112a, 112b in a vertical configuration and a cover 114 which, when removed, permits access to the valves 112a, 112b (e.g., for maintenance purposes) in a vertical direction. The device shown in Fig. 6, however, provides a less than optimal performance. This is at least partially because, owing to the orientation of the valves 112a, 112b with respect to the inlet opening 116 and outlet opening 118 flow through the valve openings 116, 118 is forced to follow a divergent path (indicated by solid arrow streamlines 120a, 120b). The blocking action of the valve disks 122a, 122b, causing this divergent flow 120a, 120b, provides resistance to flow through the backflow preventor 110 and increases the pressure drop which the backflow preventor produces.

The device depicted in Fig. 6 also has deficiencies from the point of view of installation. In general terms, the cost of installation is least when the backflow preventor occupies the smallest amount of space. Thus, when a backflow preventor is installed in a building, it is desired to minimize the floor space required for installation. When the backflow preventor is installed outside a building, the expense of installation is related to the size of the enclosure required (e.g., enclosure 132 depicted in Fig. 7). When the backflow preventor is installed underground, it is desirable to minimize the size of the trench (not shown) required for underground installation.

As seen in Fig. 6, the inlet conduit and outlet conduit 124, 126 occupy a horizontal distance 128 which determines the minimum amount of space theoretically needed for installation of a backflow preventor. The upper portion 134 of the backflow preventor 110 occupies a horizontal extent 136 which is only slightly greater than theoretically minimum horizontal extent 128 required for installation. However, the lower portion 138 has a minimum horizontal extent 142 which is substantially greater, principally because the handle portions 144a, 144b of the shutoff valves extend outward from the housing 146 in a direction which is parallel to the axis of the conduits 124, 126 (i.e., parallel to a line passing through the conduits 124, 126). Moreover, an even larger horizontal expanse 148 is required to accommodate opening of the shutoff valves since the handles 144a, 144b move in a direction parallel to the axis of the conduits 124, 126.

Fig. 7 depicts another configuration for a backflow preventor which also has certain deficiencies. The axes 152a, 152b along which the first and second check valves 154a, 154b extend (defined, for these purposes, as a line passing through the center of the inlet port of the valves 154a, 154b and parallel to the direction of flow into the valves) are parallel and both extend at an angle of about 45° to vertical. Access for maintenance is obtained by removing covers 156a, 156b to provide openings. The openings lie in planes 158a, 158b which are inclined to the horizontal by about 45°. Because neither of the openings lies in a horizontal plane, the device does not provide for access in a vertical direction. This represents a drawback to the serviceability of the device in Fig. 7.

Installation of the device shown in Fig. 7 also has certain drawbacks. Installation requires certain additional parts such as 90° elbows 162a, 162b to change the flow direction from the upward and downward flow of the inlet and outlet conduits 124, 126 to the horizontal flow direction of a backflow preventor 164. The size of the enclosure 132 required is relatively large to accommodate the extra parts 162a, 162b and since the two shutoff valves 166a, 166b and check valves 154a, 154b are generally linearly arrayed. Because of the

change in flow direction, the flanges 168a, 168b for installing the backflow preventor 164 are vertically oriented. This requires provision of supports 172a, 172b for supporting and positioning the backflow preventor 164 at least during installation. As with the device depicted in Fig. 6, the check valves 154a, 154b of the device in Fig. 7 are of a type requiring that the flow through the valves be divergent 120a, 120b around the edges of the valve disks.

Fig. 8 depicts another type of previously-provided backflow preventor also having certain deficiencies.

The axes 152c, 152d, along which the first and second check valves 154a, 154b extend, are perpendicular and both extend at an angle of 45° to vertical. Covers 156c, 156d cover access openings which lie in planes 158c, 158d, neither of which lies in a horizontal plane. Additional parts such as elbows 162c, 162d are required for installation. The two shutoff valves 166c, 166d and the two check valves 154c, 154d are generally linearly arrayed. The means for connection 168c, 168d of the inlet and outlet of the stop valves 166c, 166d are vertically oriented. The check valves 154c, 154d are of a type requiring that the flow through the valves be divergent 120a, 120b around the edges of the valve disks.

Typically, a check valve is designed to maintain its open configuration as long as there is flow through the valve. Once the flow stops or drops below a predetermined value, the check valve closes. Typically, check valves are designed so that, once the valve is closed, the inlet pressure must exceed a predetermined threshold before the valve will open. Usually, a single structure, typically a spring, is used both to provide the force to hold the valve
closed (until the threshold is reached), and to provide the biasing force which moves the valve from the opened to the closed position. Because the biasing device provides some force tending to close the valve, even during normal flow conditions, a countervailing force must be provided to counteract the closing force and maintain the valve open, during normal flow conditions. Typically, the countervailing force is provided by the fluid moving through the valve.

Accordingly, as the pressurised fluid moves through the valve, some amount of work is expended in holding the valve in the open position in opposition to the biasing force tending to close the valve. This expenditure of work causes a pressure drop across the check valve, so that the check valve itself necessarily creates a certain amount of loss of the pressure head. The amount of pressure minimally required at the inlet in order to maintain the valve in the open position is termed the "hold-open pressure." It is desirable to minimise the pressure drop or head loss during transit through the check valve, and, thus, it is desirable to reduce the hold-open force. Particularly, it is desirable that the hold-open force should be less than that from the threshold pressure. Accordingly, a number of previous check valves having a biasing device have been produced, which create a greater force on the valve when it is in the closed position than when in the open position.

Many previous designs for reduced hold-open pressure check valves involve providing a linkage of one or more rigid pivoting arms connecting the clapper to the wall or body of the valve. U.S. Patent No. 980,188, issued January 3, 1911, to Blauvelt, for example, discloses a flap or swing-type valve having a clapper which can pivot toward or away from a valve seat. The clapper is pivotally connected to a rigid link or arm which, in turn, is pivotally connected to a spring.

Other valving devices include a knuckle or toggle-type linkage having two or more relatively pivoting arms or links.

SUMMARY OF THE INVENTION

The present invention includes the recognition of problems in previous devices, including those described above.

According to the present invention, there is provided a backflow preventor assembly comprising:

first and second backflow preventer valves;

a housing encompassing said first and second backflow preventor valves, such that both of said valves automatically close if flow through said backflow preventor

assembly drops below a predetermined value, said housing including an inlet opening defining an inlet flow direction, an outlet defining an outlet flow direction and a conduit providing fluid communication between said first and second backflow preventer valves

a coupling to couple a first portion of said conduit to a second portion of said conduit;

wherein at least the first portion of said conduit is movable with respect to the second portion of said conduit in a non-screw-threaded relation only after loosening said coupling, to cause a change in said outlet flow direction with respect to said inlet flow direction to any of an infinite number of outlet flow directions in a substantially leak-free manner wherein said number of outlet flow directions lie substantially in a plane substantially parallel to said inlet flow direction.

In another aspect, there is provided a backflow preventor assembly comprising:

first and second backflow preventor valves;

a housing encompassing said first and second backflow preventor valves, such that both of said valves automatically close if flow through said backflow preventor assembly drops below a predetermined value, said housing including an inlet opening defining an inlet flow direction, an outlet defining an outlet flow direction and a conduit providing fluid communication between said first and second backflow preventor valves

a coupling to couple a first portion of said conduit to a second portion of said conduit;

means for permitting movement of said outlet opening with respect to said inlet opening in a non-screw-threaded relation only after loosening said coupling, to cause a change in said outlet flow direction with respect to said inlet flow direction to any of an infinite number of outlet flow directions in a substantially leak-free manner wherein said number of outlet flow directions lie substantially in a plane substantially parallel to said inlet flow direction.

In another aspect, there is provided a method for adjusting outflow direction in a backflow preventor assembly comprising:

providing first and second backflow preventor valves;

encompassing said first and second backflow preventor valves in a housing, such



that both of said valves automatically close if flow through said backflow preventor assembly drops below a predetermined value, said housing including an inlet opening defining an inlet flow direction, an outlet defining an outlet flow direction and a conduit providing fluid communication between said first and second backflow preventor valves

providing a coupling to couple a first portion of said conduit to a second portion of said conduit;

moving at least the first portion of said conduit with respect to the second portion of said conduit in a non-screw-threaded relation only after loosening said coupling, to cause a change in said outlet flow direction with respect to said inlet flow direction to any of an infinite number of outlet flow directions in a substantially leak-free manner wherein said number of outlet flow directions lie substantially in a plane substantially parallel to said inlet flow direction.

In another aspect, there is provided a backflow preventor apparatus for connection to parallel, oppositely-flowing inlet and outlet conduits, comprising:

a housing configured to accommodate first and second valves, and to receive fluid flow from said inlet conduit flowing in a first direction;

a first valve mounted in said housing having a seatable valve disc having an edge, movable between a closed configuration preventing flow and an open configuration permitting flow in the absence of substantial divergent flow around the edge of said first valve disc;

a second valve mounted in said housing having a seatable valve disc having an edge, movable between a closed configuration preventing flow and an open configuration permitting flow in the absence of substantial diverging flow around the edge of said second valve disc;

said fluid flow having an average streamline path between said inlet conduit and said outlet conduit wherein the sum of changes in flow direction of said average streamline path is not substantially greater than about 180 degrees;

said first valve disc, when in said open configuration, being positioned to direct said flow from said first direction to provide flow in a second direction towards said second valve;

said second valve disc, when in said open configuration, being positioned to

direct said flow from said second direction to a third direction towards said outlet conduit; and

wherein said housing is reconfigurable in a substantially leak-free manner and in a non-screw-threaded manner, only after loosening a coupling to a third configuration to cause a change in said flow from said second direction to a fourth direction, different from said third direction wherein said fourth direction is any of an infinite number of outflow directions wherein said number of outflow directions lie substantially in a plane substantially parallel to said first direction.

In another aspect, there is provided a backflow prevention valve assembly comprising:

a conduit having an inlet opening and an outlet opening, said inlet opening defining an inflow direction and said outlet opening defining an outflow direction;

backflow prevention valve means disposed within said conduit;

said conduit comprising at least first and second conduit portions each having a first end and a second end, said first and second conduit portions in a first relationship with said first ends of said first and second conduit portions being substantially adjacent and collinear; and

first means, permitting movement of said inlet opening with respect to said outlet opening to any of an infinite number of positions to establish a preferred outflow direction, with respect to said inflow direction in a substantially leak-free manner to define an infinite number of flow directions which lie substantially in a plane substantially parallel to said inflow direction.

In another aspect, there is provided a backflow prevention valve assembly comprising:

a housing having an inlet opening and an outlet opening, said inlet opening defining an inflow direction and said outlet opening defining an outflow direction;

backflow prevention valve means disposed within said housing;

said housing comprising first and second ~~having~~ housing portions, each having a first end and a second end, said first and second housing portions being substantially adjacent and collinear; and

a coupler attached to said first and second housing portions and holding said first and second housing portions in said first relationship in a substantially leak-free manner

with said second housing portion being in any of an infinite number of rotational positions with respect to said first housing portion defining an infinite number of flow directions which lie in a plane parallel to said inflow direction.

In another aspect, there is provided a method for adjusting flow directions in a backflow preventor assembly, comprising:

providing at least one backflow prevention valve;

encompassing said backflow prevention valve in a housing such that said valve automatically closes if flow through said housing drops below a predetermined value, said housing including an inlet opening defining an inlet flow direction, and an outlet opening defining an outlet flow direction;

moving at least a first portion of said housing with respect to a second portion of said housing, said first and second portions of said housing being in a non-screw-threaded relationship, to cause a change in said outlet flow direction with respect to said inlet flow direction to any of an infinite number of outlet flow directions in a substantially leak-free manner wherein said number of outlet flow directions lie in a plane parallel to said inlet flow direction.

In another aspect, there is provided a backflow prevention apparatus comprising:

a conduit having an inlet opening and an outlet opening, said inlet opening defining an inflow direction and said outlet opening defining an outflow direction;

at least one backflow prevention valve disposed within said conduit;

said conduit comprising a plurality of conduit portions including a first portion, each of said plurality of conduit portions having a first end and a second end, wherein said second end of said first conduit portion comprises one of said inlet and outlet openings; and

a coupler, coupled to said first conduit portion and to at least one other of said plurality of conduit portions, said coupler holding said first conduit portion in any of an infinite number of positions with respect to said one other of said plurality of conduit portions, in a substantially leak-free manner to define an infinite number of flow directions which lie substantially in a plane substantially parallel to said inflow direction.

In another aspect, there is provided a backflow prevention apparatus comprising:

a conduit having an inlet opening and an outlet opening, said inlet opening defining an inflow direction and said outlet opening defining an outflow direction;

at least one backflow prevention valve disposed within said conduit;

said conduit comprising a plurality of conduit portions including a substantially L-shaped first portion and a substantially L-shaped second portion, each of said plurality of conduit portions having a first end and a second end, wherein said second end of said first conduit portion comprises said inlet opening and said second end of said second conduit portion comprises said outlet opening, wherein each of said L-shaped first portion and said L-shaped second portion provides a change in average streamflow direction of about 90; and

said first conduit portion being coupled to at least one other of said plurality of conduit portions by a rotatable sealed joint, rotatable through a range of at least 180°, said rotatable sealed joint holding said first conduit portion in any of an infinite number of positions with respect to said one other of said plurality of conduit portions, in a substantially leak-free manner, each of said infinite number of positions placing said second end of said first conduit portion in a different one of an infinite number of substantially coplanar locations to define a plane parallel to said inflow direction.

In another aspect, there is provided a method for adjusting flow directions in a backflow preventor assembly, comprising:

providing at least one backflow prevention valve;

encompassing said backflow prevention valve in a housing such that said valve automatically closes if flow through said housing drops below a predetermined value, said housing including at least first and second housing portions, said first portion having an inlet opening defining an inlet flow direction, and said second portion having an outlet opening defining an outlet flow direction;

positioning said outlet opening with respect to said inlet opening to define a first configuration of said backflow preventor assembly wherein said inflow direction and said outflow direction are in a first relationship;

coupling said inlet opening to a fluid source and said outlet opening to a fluid sink to use said backflow preventor assembly in said first configuration;

reconfiguring said backflow preventor assembly to a second configuration different from said first configuration by rotating at least one of said first housing portion and said second housing portions with respect to the other, to any of an infinite number of positions, such that the relationship of said inflow direction and said outflow direction is different from said first relationship to define an infinite number of flow directions which lie substantially in a plane substantially parallel to said inlet flow direction; and

tightening a coupling device to hold said first and second portions in said first relationship in a substantially leak-free manner.

In one embodiment, adjustment is provided by making the portion of the housing which houses the second backflow preventor valve movable or

rotatable with respect to the section of housing which houses the first backflow preventor valve. In one embodiment, a cylindrical region of the housing connects the two valves and this cylindrical region can be separated to permit rotation of a portion of the cylindrical housing region with respect to the other portion. In one embodiment, the cylindrical portion includes annular shouldered flats for accommodating a pipe coupling. In one embodiment, the housing is provided as a single casting which can be separated, between the flats, by sawing or otherwise cutting through the cylindrical portion of the housing.

It has been found that performance of backflow preventors is degraded when the number of changes in flow direction is increased. An increase in the number of changes in average streamline flow direction tends to increase pressure drop and degrade performance of a backflow preventor. As used herein, average streamlines can be considered to pass through the center of valve inlets, pass along a direction from an upstream valve outlet to a downstream valve inlet and pass along the centers of conduits elsewhere. Although the above-defined average streamline is used for purposes of explanation and analysis, it is recognized that actual flow will typically contain some amount of turbulence. Nevertheless, for purposes of explanation of the present invention, the defined and depicted streamlines approximate the general flow direction and are believed to approximate the actual streamlines averaged in space and time.

Fig. 7 depicts the average streamline 182 as dotted arrows. Tracing the flow from the upper flow in the inlet conduit 182 the downward flow in the outlet conduit 126, there is a 90° change 184a at the first elbow joint 162a, a 45° change 184b just prior to the inlet port of the first valve 154a, 90° change 184c between the inlet and outlet of the first valve 154a, a 45° change 184d downstream of the outlet of the first valve 154a, a 45° change 184e upstream of the inlet to the second valve 154b, a 90° change 184f between the inlet and the outlet of the second check valve 154b, a 45° change 184g downstream of the outlet from the second check valve 154b and a

90° change 184h at the second elbow 162b. Thus, average streamline analysis shows that there is a total of 540° of change between the inlet conduit 124 and the outlet conduit 126.

Fig. 6 shows the average streamline 182 for the configuration depicted therein. There is a 90° change 186a at the first elbow joint 162c, a 45° change 186b prior to the inlet part of the first valve 154c, a 90° change 186c between the inlet and outlet of the first valve 154c, a 90° change 186d between the inlet and outlet of the second check valve 154d, a 45° change 186e downstream of the outlet from the second check valve 154d, and a 90° change 186f at the second elbow 162d. Thus, average streamline analysis shows that there is a total of 450° of change between the inlet conduit 124 and the outlet conduit 126.

A corresponding streamline analysis of the device shown in Fig. 6 indicates a total flow change of about 180°.

The present invention provides for increased performance without unacceptably degrading serviceability or installation factors. The present invention provides for a flow through open valves without requiring the flow to diverge around the edges of the valve disks. The valve components of the present invention, rather than inhibiting flow by requiring divergence as the flow moves through the valves, tends to enhance the desired flow by directing flow along the desired path. The present invention has an average streamline flow change of direction totalling about 180°. According to an embodiment of the present invention access to one of the check valves is in a vertical direction while access to the other is in a horizontal direction. The valves preferably extend along axes which are oriented at 90° to one another.

Valves containing a relatively large number of moving parts, such as pivoting rigid arms, are typically susceptible to wear or deterioration, particularly in corrosive, contaminated, or depositional environments, such as in hard water. Furthermore, rigid linkage systems are relatively expensive to design, produce, install, and maintain.

Installation and maintenance often require use of special tools.

The present invention includes a spring which connects the valve clapper to the valve body. Preferably the spring connects the clapper to a removable cover portion of the valve body. The spring can be viewed as taking the place of one or more of the rigid links of previous devices. Preferably, the spring is directly connected to the clapper device, i.e., without an intervening linkage, and forms the sole connection between the clapper device and the valve wall (preferably the cover portion of the valve wall). The spring pivots with respect to the clapper about a pivot point, with the pivot point remaining in a fixed position with respect to both the end of the spring and the clapper device during opening and closing of the valve. The spring provides a force along its longitudinal axis without a lateral component.

BRIEF DESCRIPTION OF THE DRAWINGS

Fig. 1 is a cross-sectional view through a check valving device showing a closed check valve and an opened check valve;

Fig. 1A is a partial cross-sectional view corresponding to Fig. 1, but showing another embodiment;

Fig. 2 is a cross-sectional view taken along line 2-2 of Fig. 1; and

Figs 3A and 3B depict, schematically, the triangles formed by the pivoting or attachment axes or points in the closed and opened configurations, respectively;

Figs. 4A and 4B depict, schematically, an unstressed helical spring and a compressed and bowed helical spring;

Figs. 5A and 5B depict, schematically, two end-joined helical springs, in unstressed and stressed configurations, respectively;

Fig. 6 is a schematic cross-sectional view of a backflow preventor according to a previous device;

Fig. 7 is a schematic cross-sectional view of an enclosed backflow preventor according to a previous device;

Fig. 8 is a schematic cross-sectional view of a backflow preventor according to a previous device;

Fig. 9 is a side elevational view, partly in cross-section, of a backflow preventor;

Fig. 10 is a side-elevational view of a backflow preventor; and

Fig. 11 is a side-elevational view of a backflow preventor;

Fig. 12 is a side-elevational view, partly in cross-section, of a backflow preventor, according to one embodiment of the present invention;

Fig. 13 is a side-elevational view of a backflow preventor, according to one embodiment of the present invention;

Fig. 14 is a cross-sectional view of portions of a backflow preventor housing coupled by a coupler according to one embodiment of the present invention;

Fig. 15 is a cross-sectional view taken along line 15-15 of Fig. 14;

Fig. 16A is a schematic simplified view of the apparatus depicted in Fig. 13;

Fig. 16B is an end view of the apparatus of Fig. 16A;

Fig. 17A is a side-elevational view of the apparatus of Fig. 16A, but with the outlet flow direction changed by 90°;

Fig. 17B is an end view of the apparatus of Fig. 17A;

Fig. 18A is a side-elevational view of the apparatus of Fig. 16A, but with the outlet flow direction rotated by 180°; and

Fig. 18B is an end view of the apparatus of Fig. 18A.

DETAILED DESCRIPTION OF THE PREFERRED EMBODIMENT

A backflow preventor 212, according to one embodiment of the present invention, is depicted in Fig. 12. The backflow preventor 212 includes first and second shutoff valves 214a, 214b and first and second check valves 12, 14. Valves 214a, 214, 12, 14 are encased in a housing 216. A conduit 228 provides fluid communication between the first check valve 12 and the second check valve 14. The first and second check

valves 12, 14 are positioned generally vertically above the inlet and outlet stop valves 218, 220 and the second check valve and shutoff valve 14, 214b are substantially level, but horizontally displaced from the first check valve and shutoff valve 12, 214a. Thus, the flow from the first shutoff valve 214a to the first check valve 12 and the second check valve 14 and the second shutoff valve 214b is in a generally inverted U-shape, as opposed to a linear shape.

During the operation, fluid enters the first shutoff valve 14a from the inlet conduit 124 in a first flow direction 268. When the flow reaches the first check valve 12 there is a 90° change of direction 274. The flow 272b flows through the conduit 228 towards the second check valve 14. When the flow 272b reaches the second check valve 14, there is a second 90° change in flow direction 282 of the average streamline 272. As can be seen from Fig. 12, the total change in direction of the average streamline 272 is the sum of the two changes of direction 274, 282, both of which are approximately 90°, providing a total of about 180° of change in direction. In the configuration depicted in Fig. 12, the direction of outflow 272c is substantially parallel to, spaced from, and opposite in direction from the direction of inflow 272a.

As depicted in Fig. 12, conduit 228 is provided with a device for permitting adjustment of the outflow direction. In the embodiment of Fig. 12, this device includes first and second spaced-apart annular flats 312, 314. In external, as shown in Fig. 13, the annular flats 312, 314 appear as ribs or ridges spaced apart by a groove 316. The outer faces 318, 320 of the flats 312, 314 are substantially cylindrical. The shoulders 322, 324 connecting the flats 312, 314 to the main portion of the conduit 228 are preferably slightly curved. In the embodiment of Figs. 12 and 13 the conduit 228 and both flats 312 and 314 are integrally formed such as from a single casting. In this way, the backflow preventor of the present invention can be used in a first configuration with the inflow direction 272a and outflow direction 272c parallel and opposite, as shown in Fig. 12, or can be reconfigured to provide a different outflow direction. In order to provide

such different outflow direction, the conduit 228 is cut such as by sawing along the groove 316. Preferably, the kerf created by the cut will leave substantially flat faces. Such cutting divides the conduit 228 into a first portion 326 and a second portion 328. After cutting, the first and second portions 326, 328 are separated. The second portion 328 can now be moved, such as by being rotated, with respect to the first portion 326, as described more fully below. After rotating, the first portion and second portion 326, 328 are connected, such as by using a coupling device 330 such as that depicted in Figs. 14 and 15. The coupling 330 depicted in Figs. 14 and 15 includes a gasket, such as a rubber gasket 332, a key 334 and a housing 336. The gasket 332 may be substantially annular in shape. Preferably, the key 334 and housing 336 are of a split-ring type which can be drawn and held together by a connector such as bolts 338 and nuts 340. The key 334 includes ledges 342, 344 which engage the shoulders 322, 324 of the flats 312, 314. The coupler 330 is configured to provide a leak-free connection between the first and second portions 326, 328 of the conduit 228.

As depicted in Fig. 16A, when the conduit 228 is uncut, the inlet flow direction 272a and outlet flow direction 272c, respectively defined by the valve inlet opening 350 and outlet opening 352 are substantially parallel and opposite. After the conduit 228 is cut, as described above, the valve can be reconfigured to provide a different outflow direction. For example, as depicted in Fig. 17A, the right hand portion of the conduit 228 can be rotated to an angle 354 of about 90° to provide an outlet opening 352 defining an outflow direction 272d which is different from the first outflow direction 272c. In the configuration depicted in Figs. 17A and 17B, the outflow direction 272d is substantially at right angles to the inflow direction 272a. Because the cutlet opening 352 can be placed in a plurality of different positions, by rotating different angles, a plurality of outflow directions, preferably an infinite number of outflow directions, can be provided. In the depicted embodiment, all of the outflow directions lie in a plane parallel to the inflow direction 272a. In the

configuration depicted in Figs. 18A and 18B, the outflow opening 352 has been rotated through an angle 356 of about 180° to provide an outflow direction 272e which is parallel to and in the same direction as the inflow direction 272a.

A backflow preventor 212 is depicted in Fig. 9. The backflow preventor 212 includes first and second shutoff valves 214a, 214b and first and second check valves 12, 14. The shutoff valves can be any of a number of well-known valve designs, including a ball valve, a gate valve, or, preferably, a globe valve. Preferably, the shutoff valves can be manually opened or closed by moving external handles 269a, 296b. The valves 214a, 214b, 12, 14 are encased in a housing 216 which includes an inlet lower portion 218, a valve body 16, and an outlet lower portion 220. A conduit 222 leads from the first shutoff valve 214a to the inlet port 224 of the first check valve 12. The inlet port 224 is preferably circular in shape and surrounded by a valve seat 28. The inlet port 224 can be closed by the clapper or valve disk 32. The valve disk 32 is movable between a closed configuration or position (Fig. 1) and an open configuration as depicted in Fig. 9. The flow exits the first valve region 12 through an outlet port 226 and enters a conduit 228 which provides fluid communication between the first check valve 12 and the second check valve 14. In the embodiment depicted in Fig. 9, the conduit 228 contains a first downward sloping portion 232 imparting a shape to the apparatus similar to the letter "N". At the downstream end of the conduit 228 is an inlet port 234 of the second check valve 14. Surrounding the inlet port 234 is a valve seat 76. The second check valve 14 operates in a manner substantially similar to that of the first check valve 12 as described more fully below. Flow leaves the second check valve 14 to an outlet port 236 and is conveyed by a conduit 238 to a second shutoff valve 214b.

As seen in Fig. 9, the first and second check valves 12, 14 are positioned generally vertically above the inlet and outlet stop valves 218, 220 and the second check valve and shutoff valve 14, 214b are substantially level, but horizontally displaced from the first check valve and shutoff valve 12, 214a. Thus, the flow from the first shutoff valve

214a to the first check valve 12, the second check valve 12 and the second shutoff valve 214b is in a generally inverted-U shaped, as opposed to a linear shape such as that depicted in Figs. 7 and 8. In this way, the horizontal extent 262 of the backflow preventor 212 is reduced, compared to linear configurations such as those in Figs. 7 and 8. As can be seen from Fig. 9, the horizontal extent 262 of the backflow preventor 212 is also reduced, compared to a configuration such as that depicted in Fig. 6, since the handles 264a, 264b by which the shutoff valves 214a, 214b are operated, extend in a direction perpendicular to a line connecting the inlet and outlet conduits 124, 126. The direction in which the handles 264a, 264b move as the shutoff valves 214a, 214b are opened and closed, is a direction perpendicular to a line connecting the conduits 124, 126. By providing shutoff valve handles 264a, 264b which extend and move in a direction perpendicular to the line connecting the conduits 124, 126, the horizontal extent of the backflow preventor 212, in a direction along the line connecting the conduits 124, 126 is reduced, compared to devices such as that depicted in Fig. 6.

The first check valve 12 extends generally along an axis 242. The second check valve 14 extends along an axis 244. In the embodiment depicted in Fig. 9, the second check valve extends along an axis 244 which is at approximately 90° to the axis 242 of the first check valve 12.

An opening 246 is provided in the housing 216 in the region of the first check valve 12, covered by a covering 248. The covering 248 (Fig. 10) is removably held in place by bolts 252a, 252b. When access to the first check valve 12 is desired, such as for maintenance or installation, the bolts 258a, 258b are removed and the covering 248 is removed to expose the first check valve 12 through the opening 246. As can be seen from Fig. 9, access to the first check valve 12 is along a vertical direction.

A second opening 254 is provided in the housing 216 in the region of the second check valve 14. The opening 254 is covered by a covering 256 removably held in place by bolts 258a, 258b. When access to the second check valve 14 is

desired, the covering 256 is removed. As can be seen from Fig. 9, access to the second check valve 214 is in a horizontal direction.

The lower portion of the backflow preventor 212 includes flanges 266a, 266b for connection to the inlet and outlet conduits 124, 126. Because the flanges 266a, 266b are horizontally oriented, the backflow preventor 212 can be positioned to rest on the inlet and outlet conduits 124, 126 during installation, thus avoiding the need for supports such as those 172a, 172b depicted in Fig. 7.

During operation, fluid enters the first shutoff valve 214a from the inlet conduit 124 in a first flow direction 268. The average streamline flow 272a continues through the conduit 222 and through the inlet port 224 without substantial change in direction until it reaches the valve disk or clapper 32. As shown in Fig. 9, because of the configuration of the valve disk 32 flows through the inlet port 224 is substantially straight 276 and non-divergent. When the flow reaches the clapper 32 (i.e., when any fluid "parcel" component of the flow reaches the clapper 32) there is a 90° change of direction 274. When the clapper 32 is in the open configuration, as depicted in Fig. 9, it is positioned so as to direct the flow (as analyzed by the position of the average streamline) from the first direction 272a (i.e., substantially vertically upward) to a second direction, 272b (i.e., substantially horizontally toward the second check valve 13). In the embodiment depicted in Fig. 9, the clapper 32 acts as a flow director because it forms a surface positioned substantially at an angle with respect to the upward flow 272a.

The flow 272b which has been redirected by the clapper 32 exits the outlet port 226 and flows through the conduit 228 towards the second check valve 14. The flow 272b passes through the inlet port 234 of the second check valve 14. During such passage, the flow is substantially straight and non-divergent 278. The flow 272b proceeds from the first check valve 12 to the second check valve 14 substantially without change of direction until it reaches the clapper 72 of the second check valve 14. The clapper 72 acts as a flow director,

in a manner similar to that of the first clapper 32, redirecting the flow 272b to a vertically downward direction to 272c. Thus, there is a second 90° change in flow direction 282 of the average streamline 272. As can be seen from Fig. 9, the total change in direction of the average streamline 272 is the sum of the two changes of direction 274, 282, both of which are approximately 90°, providing a total of about 180° of change in direction.

Fig. 11 depicts a backflow preventor 286. The backflow preventor 286 depicted in Fig. 11 is substantially similar to the backflow preventor depicted in Fig. 10 except for the addition of a relief valve 288 and a conduit 292. The relief valve 288 is provided in order to discharge possibly contaminated water into the atmosphere to prevent its entering the water source. A number of relief valves of types well-known in the art can be used. The relief valve 288 and conduit 292 are connected to the housing 216 in two places. The conduit 292 connects the relief valve 288 to a portion of the housing 293 which is upstream of the first check valve 12. The relief valve 288 is also connected to a region 296 (Fig. 9) which is downstream of the first check valve 12. For proper operation, the region 296 should be a distance 298 below the level 299 of the inlet port 224 for the first check valve 12. This change in level 298 is provided by the downward sloping portion 232. In operation, when pressure at the upstream location 293 falls below a predetermined level with respect to pressure in the valve interior, the valve 288 opens to permit discharge of water.

Test cocks 297a, 297b, 297c are connected to the housing 216 in order to provide a position for pressure testing, e.g., by connecting a differential pressure gauge.

As depicted in Fig. 1, a check valving device 10 is provided having a first check valve 12 and a second check valve 14. A number of valves can be used for the check valves, including those depicted in Figs. 1 and 2. When pivoting valves are used, such as the valves depicted in Figs. 1 and 2, it is anticipated such valve with experience least wear when configured in the vertical up or vertical down positions (with

horizontal pivot axes). Thus, when it is desired to avoid wear, the preferred configurations for the adjustable outlet, using such valves, will be those depicted in Figs. 16A and 18A. If other orientations are desired, and wear is to be avoided, it would be preferable to mount the valves within the housing in a position such that, after adjusting outlet direction, the valve orientation will be vertically upward or downward. Alternatively, it may be possible to use another type of valve which is less susceptible to wear in other positions. Although Fig. 1 depicts the first check valve 12 in a closed position, and the second check valve 14 in an open position, in actual operation, as described more fully below, the first and second valves 12, 14 will open and close substantially simultaneously or within a short time interval of one another. The valving device includes a valve body 16 made up of a wall 18. The valve body 16 can be formed of a number of materials, including ductile iron, brass, stainless, steel, or other metals, plastic, resin, glass, and/or ceramic and the like. The valve body 16 defines an inlet port 22 and an outlet port 24, preferably having a substantially circular cross-section. Preferably, the inlet port and outlet port include devices, such as flanges 26, for connecting the valving device 10 to fluid conduits. Adjacent to the inlet port 22 is a valve seat 28, such as an annular seat formed, for example, of iron.

A disk-shaped clapper 32 is rigidly connected, such as by using a bolt 34 and nut 36, to a clapper arm 38. A first end 39 of the arm 38 is pivotally mounted adjacent the valve seat 28 by connection to a portion of the valve body 16 by a pivot joint 42a, 42b to permit pivoting of the arm 38, and rigidly attached to disk 32 about a first axis 43.

The lower surface of the clapper 32 includes a seat disk 44 configured to sealingly mate with the valve seat 28 when the clapper 32 is pivoted to its closed position, as depicted in the left portion of Fig. 1. The disk 44 can be made of a number of materials, including plastic, rubber, resin, and the like, and is preferably a soft (such as about 40 durometer) elastomer material, such as a synthetic rubber e.g., EPDM (ethylene-propylene terpolymer). The disk 44 is

reversible so that after it experiences wear, it can be removed, rotated 180° about a horizontal plane, and reinstalled.

The second end 48 of the clapper arm 38 is pivotally connected to a spring 52. The spring 52 is contained between first and second spring seats 54, 56. The spring 52 is preferably a helical spring which is compressional, i.e., is reduced in length as the valve 12 opens. The spring 52 can be formed of a number of materials, such as spring steel, plastic, or rubber. A single helical spring 52', such as that depicted in Fig. 4A, is commonly subject to deformation when compressed. As shown in Fig. 4B, a compressed helical spring commonly assumes a bowed or arcuate configuration. Although such a spring can be used in accordance with the present invention, according to the preferred embodiment, two springs 52A, 52B are joined end-to-end by connection to a plate-like or annular device, such as a washer 53, as depicted in Fig. 5A. Upon compression, as depicted in Fig. 5B, such a spring 52 tends to maintain its linear configuration and is not subject to bowing or distortion to the degree an ordinary helical spring 52B is.

The first spring seat 54 is pivotally attached to the second end 48 of the clapper arm 38 to permit pivoting of the spring 52 about a second axis 64.

The second spring seat 56 is pivotally connected to the valve body wall 18. In the preferred embodiment, the portion of the valve wall which the second spring seat 56 connects to is a removable cover 65 which can be attached to the remainder of the valve body wall 18, by e.g., bolts, screws, clamps, or the like (not shown). As shown in Fig. 1, the second spring seat 56 can be connected within a pocket 58 at an attachment point 62, to permit pivotal movement of the spring 52 about a third axis 66.

In the embodiment depicted in Fig. 1, the second valve 14 is positioned downstream from the first valve 12. Preferably, the second valve 14 is identical in construction to the first valve 12, and includes a clapper 72, a biasing device, such as a spring 74, and a valve seat 76. It will be understood, however, that the present invention can be used in

single check valve configurations or other types of valve configurations.

Viewed in cross-section, each of the two valves 12, 14 define a triangle having vertices at the first axis 43, 43', second axis 64, 64', and third axis 66, 66', respectfully. When the valve 12 is closed, the spring biasing device 52 provides a force to the clapper 32, tending to hold the clapper 32 in the closed position. The amount of force is dependent upon two factors: (1) the magnitude of the longitudinal force provided by the spring 52; and (2) the component of that force which acts in a direction tending to close the clapper 32. As depicted in Figs. 3A and 3B, the spring closing force can be described as

$$\mathrm{Sin}(180°-\alpha).\vec{F} \qquad (1)$$

where α 77, 77' is the angle formed between the lines containing the first and second axes 43, 64, and the line containing the second and third axes 64, 66, and $\vec{F}$ 79, 79' is the vector force provided by the spring along the longitudinal spring axis which intersects the second axis 64 and third axis 66.

When the inlet pressure exceeds the outlet pressure, an opening force is created. When the opening force on the clapper 32 exceeds the spring closing force (shown in equation (1)) plus any closing forces provided by other sources, such as fluid pressure the clapper 32 moves away from the valve seat 28, opening the valve 12 to provide fluid communication between the inlet port and the outlet port 24. During the opening movement of the valve 12, the position of the second axis 64 changes with respect to the valve body 10, but does not change with respect to the clapper 32 or with respect to the adjacent end of the spring 52.

As the clapper 32 pivots about the first axis 43, the angle α increases from a value of about 118° 77 in the configuration shown on the left-hand portion of Fig. 1 (depicted schematically in Fig. 3A) to a value of about 164° 77' when in the fully opened configuration of the valve 14, shown on the right-hand portion of Fig. 1 (depicted

schematically in Fig. 3B). The magnitude of the closing force provided to the clapper 32 thus changes from about 87% of that of the spring force F 79 to about 27% of that of the spring force F 79'. However, during this time, the magnitude of spring force F also changes, since it is proportional to the length of the spring 52, becoming larger as the valve 12 opens. In order to produce a valve 12 having a reduced hold-open force, the extreme values of the angle α 77, 77', the distance between the first and third axes 43, 66, and first and second axes 43, 64 are selected so that equation (1) yields a smaller closing force in the opened position of the valve (Fig. 3B) than in the closed position of the valve (Fig. 3A).

The particular values for the hold-open force, maximum tolerable head loss, and the threshold opening pressure will depend upon the particular use or application of the valving device 10. In one embodiment of the present invention, valving device 10 opens when the inlet pressure exceeds the outlet pressure by about 2-5 psi (about 14-35 kPa), and closes when the outlet pressure equals or exceeds the inlet pressure. Preferably, this embodiment has a head loss of less than 2 psi in a static or no-flow (limiting) condition, and there is little increase in head loss as the flow increases, such as a head loss of about 3 psi (about 20 kPa), with an operational flow velocity of about 7.5 ft./sec. (about 2.3 meters/sec.), or a rated flow velocity,
e.g., 18 ft./sec. (about 5.5 meters/sec.) In another embodiment, the static condition head loss is about 8 psi (about 56 kPa), and the head loss during flow conditions remains below about 10 psi (about 70 kPa).

Based on the above description, a number of advantages of the present invention are apparent. The backflow preventor in the present invention has enhanced performance, such as lower pressure drop, and has a decreased number of changes of flow direction. By providing a device in which the valves are aligned 90° to each other and in which the total change of direction is about 180°, a backflow preventor is provided which has enhanced performance without substantial degradation of serviceability.

By using the apparatus of the present invention, a backflow preventor can be provided which provides outflow in any of a plurality of directions without the pressure loss and expense of providing additional fittings. For example, it is possible to provide inflow and outflow which are both directed vertically upward while reducing pressure loss in pressure-sensitive applications such as fire protection and high rise buildings. By providing a housing which can be cast as a unitary piece and, if desired, cut, the same body casting can be used, uncut in a standard device, as is used in the adjustable outlet when cut.

A number of modifications and variations of the invention can be used. The backflow preventor described above, in particular the housing and flow configuration, can be used in conjunction with check valves other than the check valves described, such as flapper valves with other types of biasing mechanisms. The check valve of the present invention can be used in combination with other valves or fluid-control devices. The valve can be used with fluids other than liquids. The valve can be configured without using a clapper arm, such as by directly pivoting the spring to the clapper and/or directly pivoting the clapper adjacent the valve seat. Other shapes and geometries of the clapper, ports, valve seats, and other components can be used. Other types of biasing devices can be used, including springs other than helical springs, hydraulic biasing devices, and the like. The present invention can be used employing other types of couplers for joining the separated portions of the conduit than those described and can be constructed of a variety of materials. The present invention can provide for movement of the outlet opening using devices other than the annular flats, such as by using a rotatable sealed joint. Although in one embodiment the housing is provided as a unitary piece which can be cut to achieve a rotation, the housing can also be provided in two or more separate pieces, e.g., joined by a coupling, so that it is not necessary to cut the housing in order to perform rotation.

Although the description of the invention has included a description of a preferred embodiment and certain

modifications and variations, other modifications and variations can also be used, within the scope of the invention, which are described by the following claims.

The claims defining the invention are as follows:

1. A backflow preventer assembly comprising:

first and second backflow preventer valves;

a housing encompassing said first and second backflow preventer valves, such that both of said valves automatically close if flow through said backflow preventor assembly drops below a predetermined value, said housing including an inlet opening defining an inlet flow direction, an outlet defining an outlet flow direction and a conduit providing fluid communication between said first and second backflow preventer valves

a coupling to couple a first portion of said conduit to a second portion of said conduit;

wherein at least the first portion of said conduit is movable with respect to the second portion of said conduit in a non-screw-threaded relation only after loosening said coupling, to cause a change in said outlet flow direction with respect to said inlet flow direction to any of an infinite number of outlet flow directions in a substantially leak-free manner wherein said number of outlet flow directions lie substantially in a plane substantially parallel to said inlet flow direction.

2. A backflow preventer assembly, as claimed in claim 1, wherein said conduit includes first and second spaced-apart annular flats configured to accommodate a pipe coupling apparatus after being separated by cutting.

3. A backflow preventer assembly, as claimed in claim 1, wherein said outlet flow direction can be changed to any of a plurality of directions.

4. A backflow preventor assembly comprising:

first and second backflow preventor valves;

a housing encompassing said first and second backflow preventor valves, such that both of said valves automatically close if flow through said backflow preventor assembly drops below a predetermined value, said housing including an inlet opening defining an inlet flow direction, an outlet defining an outlet flow direction and a conduit providing fluid communication between said first and second backflow preventor valves

a coupling to couple a first portion of said conduit to a second portion of said conduit;

means for permitting movement of said outlet opening with respect to said inlet opening in a non-screw-threaded relation only after loosening said coupling, to cause a change in said outlet flow direction with respect to said inlet flow direction to any of an infinite number of outlet flow directions in a substantially leak-free manner wherein said number of outlet flow directions lie substantially in a plane substantially parallel to said inlet flow direction.

5. A backflow preventor assembly, as claimed in Claim 4, wherein said means for permitting movement includes first and second spaced-apart annular flats on said conduit Configured to accommodate a pipe coupling apparatus after said Conduit is separated by cutting.

6. A method for adjusting outflow direction in a backflow preventor assembly comprising:

providing first and second backflow preventor valves;

encompassing said first and second backflow preventor valves in a housing, such that both of said valves automatically close if flow through said backflow preventor assembly drops below a predetermined value, said housing including an inlet opening defining an inlet flow direction, an outlet defining an outlet flow direction and a conduit providing fluid communication between said first and second backflow preventor valves

providing a coupling to couple a first portion of said conduit to a second portion of said conduit;

moving at least the first portion of said conduit with respect to the second portion of said conduit in a non-screw-threaded relation only after loosening said coupling, to cause a change in said outlet flow direction with respect to said inlet flow direction to any of an infinite number of outlet flow directions in a substantially leak-free manner wherein said number of outlet flow directions lie substantially in a plane substantially parallel to said inlet flow direction.

7. A method, as claimed in claim 6, wherein said conduit includes first and second spaced-apart annular flats, and further comprising:

cutting said housing between said first and second ~~pats~~ Flats to separate said conduit into first and second portions;

rotating said first portion with respect to said second portion; and

connecting said first and second portions with a connector.

8. A backflow preventer apparatus for connection to parallel, oppositely-flowing inlet and outlet conduits, comprising:

a housing configured to accommodate first and second valves, and to receive fluid flow from said inlet conduit flowing in a first direction;

a first valve mounted in said housing having a seatable valve disc having an edge, movable between a closed configuration preventing flow and an open configuration permitting flow in the absence of substantial divergent flow around the edge of said first valve disc;

a second valve mounted in said housing having a seatable valve disc having an edge, movable between a closed configuration preventing flow and an open configuration permitting flow in the absence of substantial diverging flow around the edge of said second valve disc;

said fluid flow having an average streamline path between said inlet conduit and said outlet conduit wherein the sum of changes in flow direction of said average streamline path is not substantially greater than about 180 degrees;

said first valve disc, when in said open configuration, being positioned to direct said flow from said first direction to provide flow in a second direction towards said second valve;

said second valve disc, when in said open configuration, being positioned to direct said flow from said second direction to a third direction towards said outlet conduit; and

wherein said housing is reconfigurable in a substantially leak-free manner and in a non-screw-threaded manner, only after loosening a coupling to a third configuration to cause a change in said flow from said second direction to a fourth direction, different from said third direction wherein said fourth direction is any of an infinite number of

outflow directions wherein said number of outflow directions lie substantially in a plane substantially parallel to said first direction.

9. A backflow preventer assembly, as claimed in claim 1, wherein said housing is provided as two separate pieces said first piece comprising said first portion and said second piece comprising said second portion.

10. A backflow preventer assembly, as claimed in claim 4, wherein said housing is provided as two separate pieces and wherein said means for permitting movement includes a first annular flat provided on said first piece and a second annular flat provided on said second piece.

11. A method, as claimed in claim 6, wherein said housing includes first and second separate pieces and wherein said step of moving comprises rotating said first piece with respect to said second piece.

12. A backflow preventer apparatus, as claimed in claim 8, wherein said housing comprises first and second separate pieces.

13. A backflow prevention valve assembly comprising:

a conduit having an inlet opening and an outlet opening, said inlet opening defining an inflow direction and said outlet opening defining an outflow direction;

backflow prevention valve means disposed within said conduit;

said conduit comprising at least first and second conduit portions each having a first end and a second end, said first and second conduit portions in a first relationship with said first ends of said first and second conduit portions being substantially adjacent and collinear; and

first means, permitting movement of said inlet opening with respect to said outlet opening to any of an infinite number of positions to establish a preferred outflow direction, with respect to said inflow direction in a substantially leak-free manner to define an infinite number of flow directions which lie substantially in a plane substantially parallel to said inflow direction.

14. A backflow prevention valve assembly, as claimed in claim 13, wherein said backflow prevention valve means includes a first valve disposed in said first portion of said conduit and a second valve disposed in said second portion of said conduit.

15. A backflow prevention valve assembly as claimed in claim 14, wherein said first means is located between said first portion of said housing and said second portion of said housing.

16. A backflow prevention valve assembly, as claimed in claim 13, wherein said first means comprise said first and second conduit portions coupled to each other in a substantially leak-free manner.

17. A backflow prevention valve assembly, as claimed in claim 16, wherein said first and second conduit portions are positioned end-to-end with respect to one another.

18. A backflow prevention valve assembly, as claimed in claim 16, further comprising means for holding said first and second conduit portions in said end-to-end position in any of an infinite number of rotated configurations with respect to each other through a rotation range of at least 180°.

19 A backflow prevention valve assembly, as claimed in claim 16, further comprising means for sealing the end-to-end region of said first and second conduit portions against leaking.

20. A backflow prevention valve assembly comprising:

a housing having an inlet opening and an outlet opening, said inlet opening defining an inflow direction and said outlet opening defining an outflow direction;

backflow prevention valve means disposed within said housing;

said housing comprising first and second ~~having~~ housing portions, each having a first end and a second end, said first and second housing portions being substantially adjacent and collinear; and

a coupler attached to said first and second housing portions and holding said first

and second housing portions in said first relationship in a substantially leak-free manner with said second housing portion being in any of an infinite number of rotational positions with respect to said first housing portion defining an infinite number of flow directions which lie in a plane parallel to said inflow direction.

21. A backflow prevention valve assembly, as claimed in claim 20, wherein said backflow prevention valve means includes a first valve disposed in said second portion of said housing.

22. A backflow prevention valve assembly, as claimed in claim 21, wherein said first means is located between said fist portion of said housing and said second portion of said housing.

23. A method for adjusting flow directions in a backflow preventor assembly, comprising;

providing at least one backflow prevention valve;

encompassing said backflow prevention valve in a housing such that said valve automatically closes if flow through said housing drops below a predetermined value, said housing including an inlet opening defining an inlet flow direction, and an outlet opening defining an outlet flow direction;

moving at least a first portion of said housing with respect to a second portion of said housing, said first and second portions of said housing being in a non-screw-threaded relationship, to cause a change in said outlet flow direction with respect to said inlet flow direction to any of an infinite number of outlet flow directions in a substantially leak-free manner wherein said number of outlet flow directions lie in a plane parallel to said inlet flow direction.

24. A method, as claimed in claim 23, wherein said step of moving comprises:

rotating said first portion with respect to said second portion to place said first and second portions in a desired position;

tightening a clamp to hold said first and second portions in said desired position in a substantially leak-free manner.

25. A backflow prevention valve assembly, as claimed in claim 21, wherein said first and second housing portions in combination with said coupler comprises a rotatable sealed joint.

26. A backflow prevention valve assembly, as claimed in claim 20, wherein at least one of said first and second housing portions is a substantially L-shaped member.

27. A backflow prevention valve assembly, as claimed in claim 26, wherein said L-shaped member provides an average change in streamflow direction of about 90°.

28. A backflow prevention apparatus comprising:

a conduit having an inlet opening and an outlet opening, said inlet opening defining an inflow direction and said outlet opening defining an outflow direction;

at least one backflow prevention valve disposed within said conduit;

said conduit comprising a plurality of conduit portions including a first portion, each of said plurality of conduit portions having a first end and a second end, wherein said second end of said first conduit portion comprises one of said inlet and outlet openings; and

a coupler, coupled to said first conduit portion and to at least one other of said plurality of conduit portions, said coupler holding said first conduit portion in any of an infinite number of positions with respect to said one other of said plurality of conduit portions, in a substantially leak-free manner to define an infinite number of flow directions which lie substantially in a plane substantially parallel to said inflow direction.

29. A backflow prevention apparatus comprising:

a conduit having an inlet opening and an outlet opening, said inlet opening defining an inflow direction and said outlet opening defining an outflow direction;

at least one backflow prevention valve disposed within said conduit;

said conduit comprising a plurality of conduit portions including a substantially L-shaped first portion and a substantially L-shaped second portion, each of said plurality of conduit portions having a first end and a second end, wherein said second end of said first conduit portion comprises said inlet opening and said second end of said second

conduit portion comprises said outlet opening, wherein each of said L-shaped first portion and said L-shaped second portion provides a change in average streamflow direction of about 90; and

said first conduit portion being coupled to at least one other of said plurality of conduit portions by a rotatable sealed joint, rotatable through a range of at least 180°, said rotatable sealed joint holding said first conduit portion in any of an infinite number of positions with respect to said one other of said plurality of conduit portions, in a substantially leak-free manner, each of said infinite number of positions placing said second end of said first conduit portion in a different one of an infinite number of substantially coplanar locations to define a plane parallel to said inflow direction.

30. A method for adjusting flow directions in a backflow preventor assembly, comprising:

providing at least one backflow prevention valve;

encompassing said backflow prevention valve in a housing such that said valve automatically closes if flow through said housing drops below a predetermined value, said housing including at least first and second housing portions, said first portion having an inlet opening defining an inlet flow direction, and said second portion having an outlet opening defining an outlet flow direction;

positioning said outlet opening with respect to said inlet opening to define a first configuration of said backflow preventor assembly wherein said inflow direction and said outflow direction are in a first relationship;

coupling said inlet opening to a fluid source and said outlet opening to a fluid sink to use said backflow preventor assembly in said first configuration;

reconfiguring said backflow preventor assembly to a second configuration different from said first configuration by rotating at least one of said first housing portion and said second housing portions with respect to the other, to any of an infinite number of positions, such that the relationship of said inflow direction and said outflow direction is different from said first relationship to define an infinite number of flow directions which lie substantially in a plane substantially parallel to said inlet flow direction; and

tightening a coupling device to hold said first and second portions in said first

relationship in a substantially leak-free manner.

31. A backflow preventor assembly substantially as hereinbefore described with reference to the accompanying drawings.

32. A method for adjusting outflow direction in a backflow preventor assembly, substantially as hereinbefore described with reference to the accompanying drawings.

33. A backflow preventor apparatus substantially as hereinbefore described with reference to the accompanying drawings.

DATED this 18th day of December, 1995

CMB INDUSTRIES INC
By Its Patent Attorneys
DAVIES COLLISON CAVE

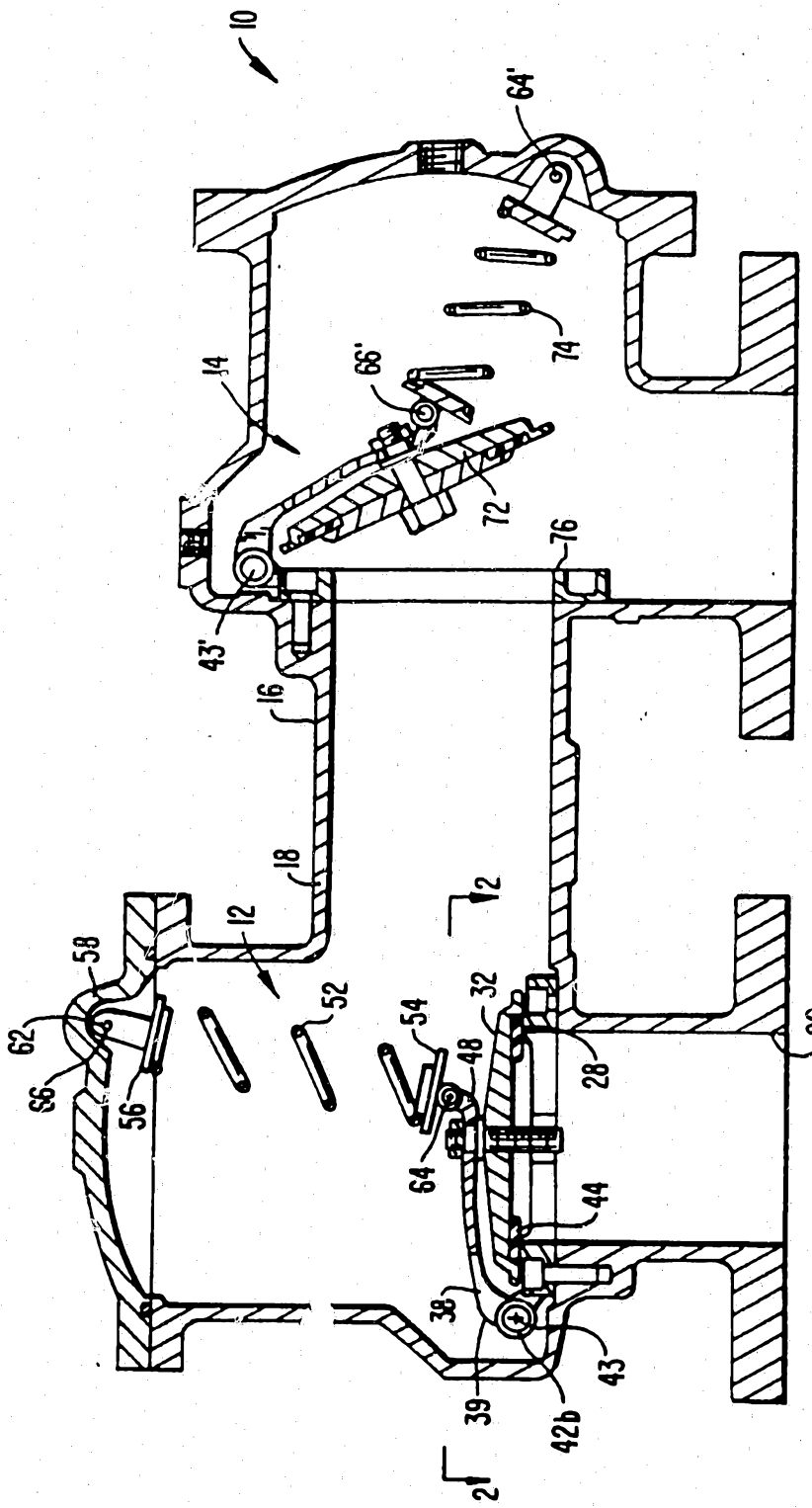
10
64'
74
14
66'
72
76
43'
16
18
12
2
58
62
66
56
52
54
48
32
28
22
64
44
38
39
42b
43
2

FIG._1.

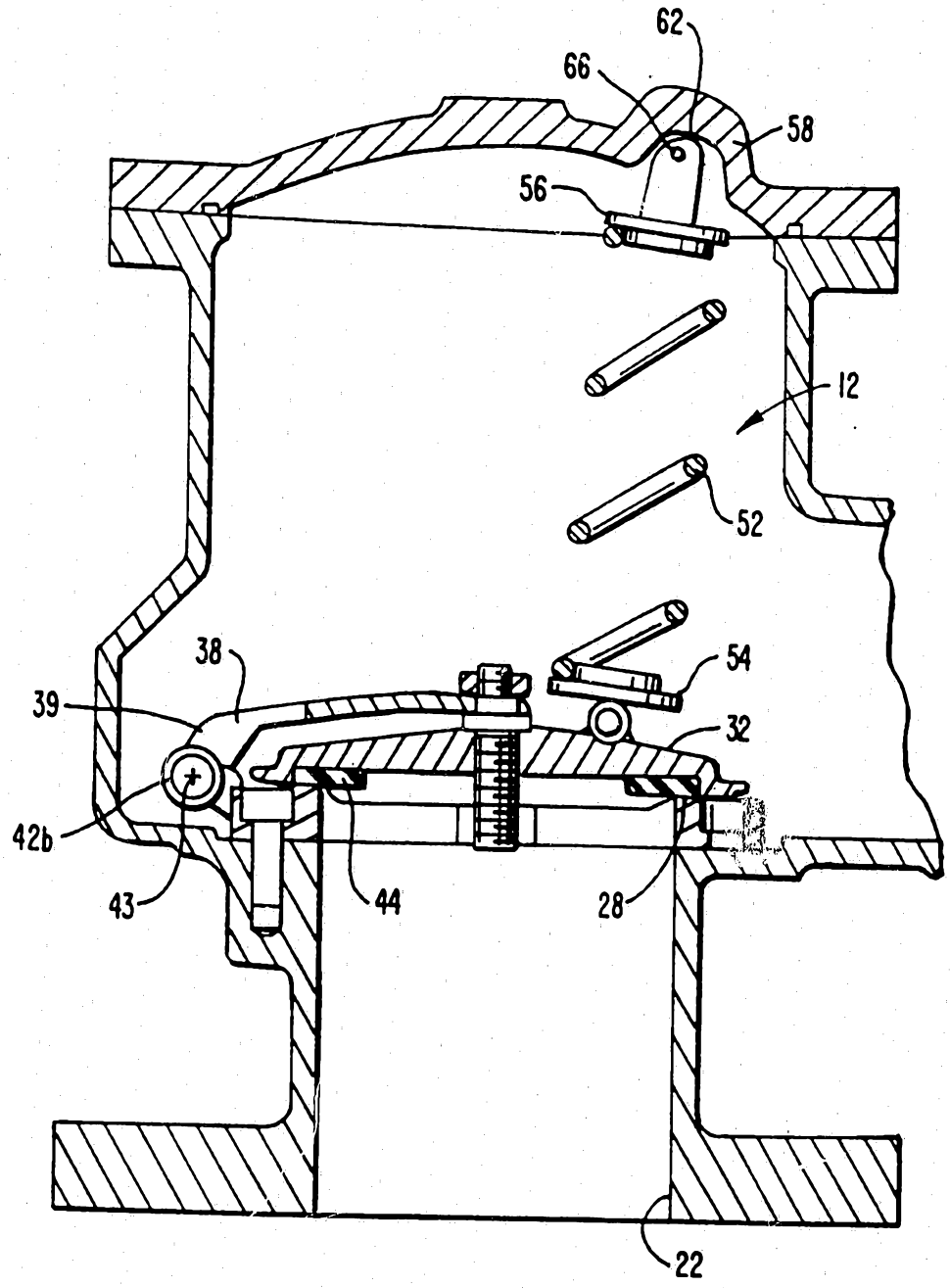

FIG._1A.

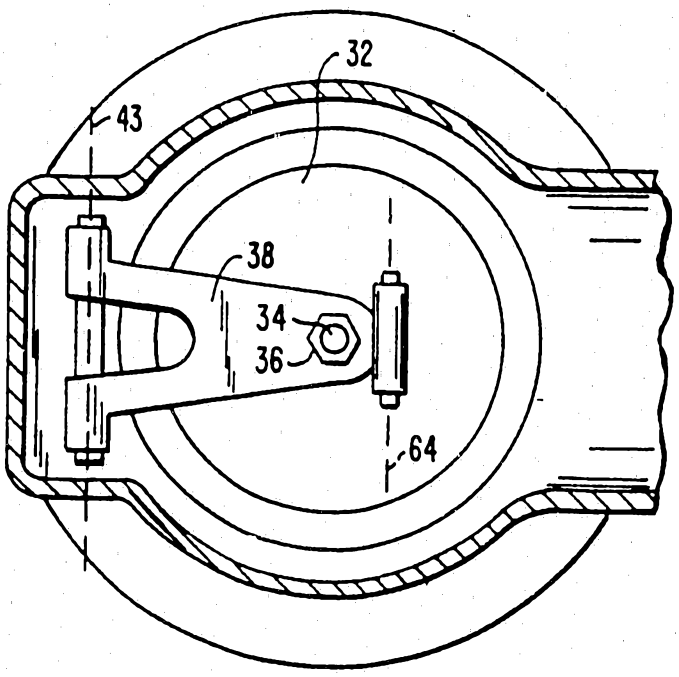

FIG._2.

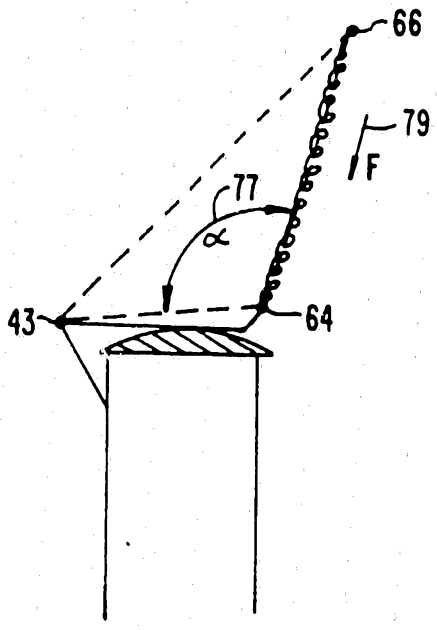

FIG._3A.

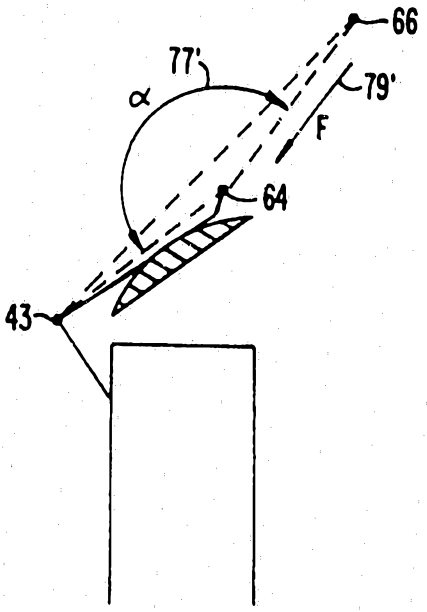

FIG._3B.

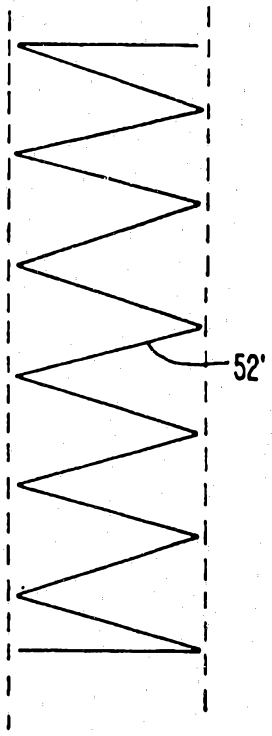

FIG._4A.

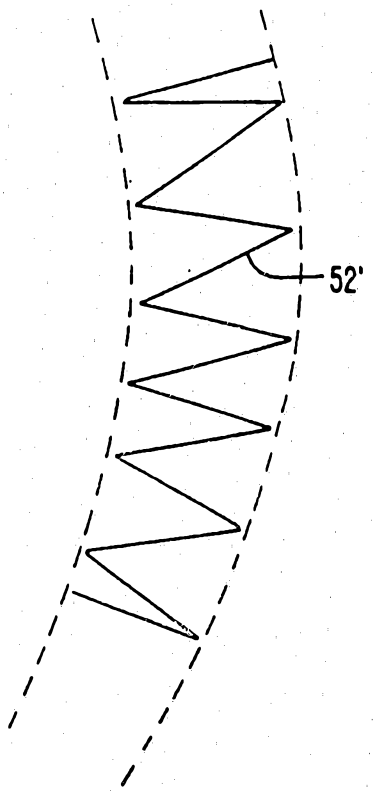

FIG._4B.

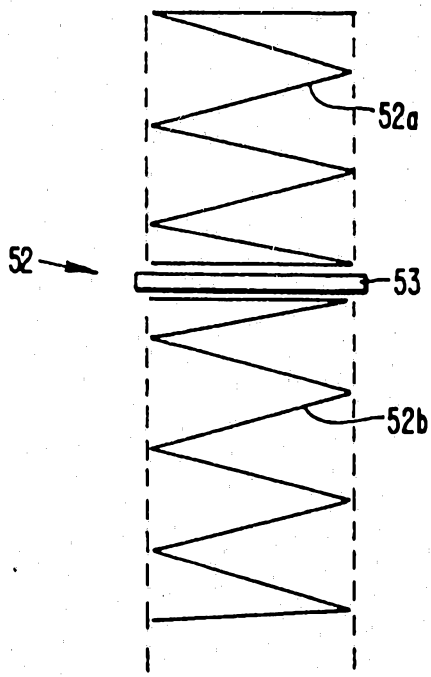

FIG._5A.

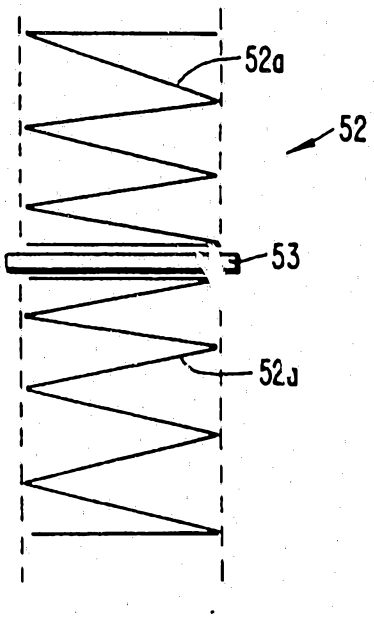

FIG._5B.

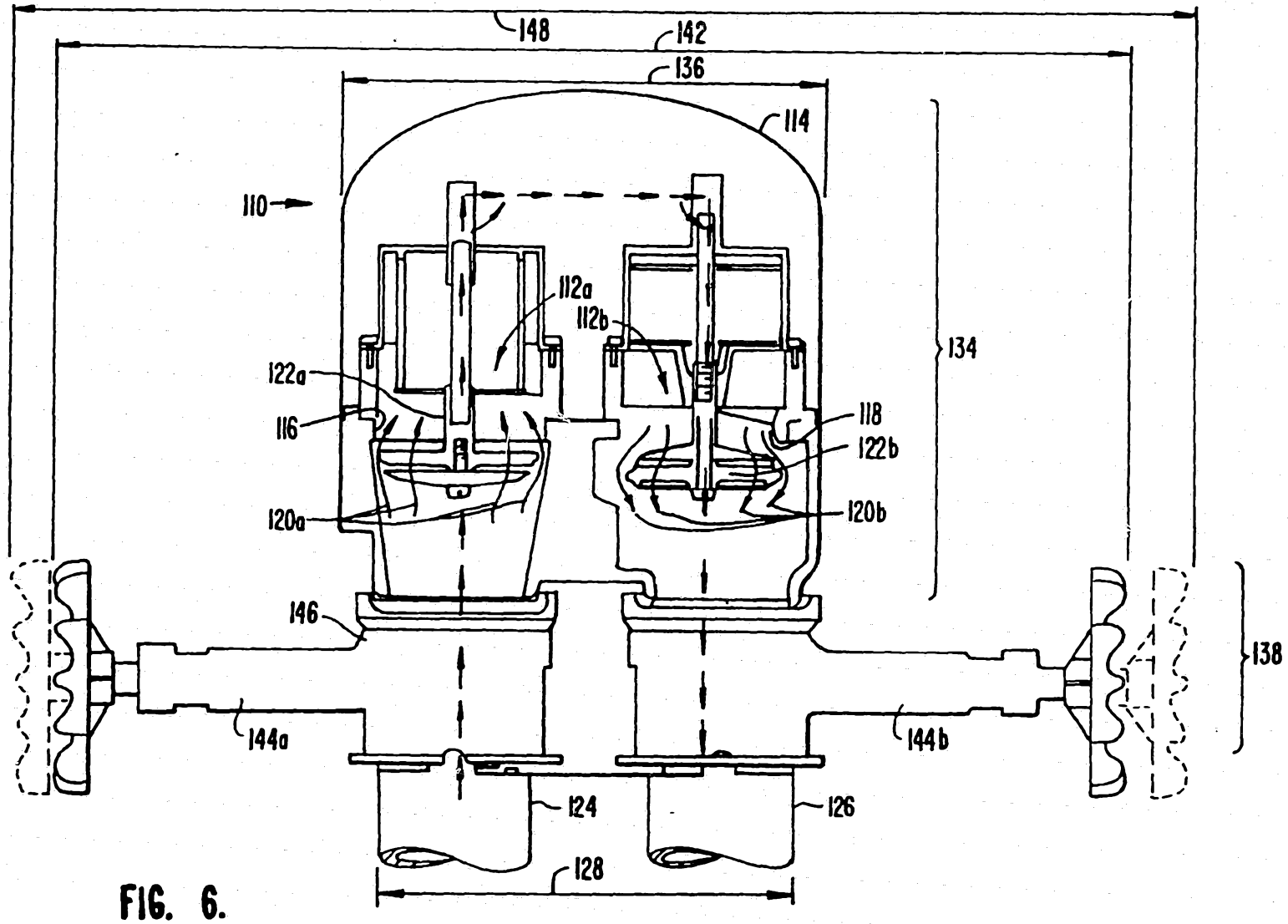

FIG. 6.
PRIOR ART

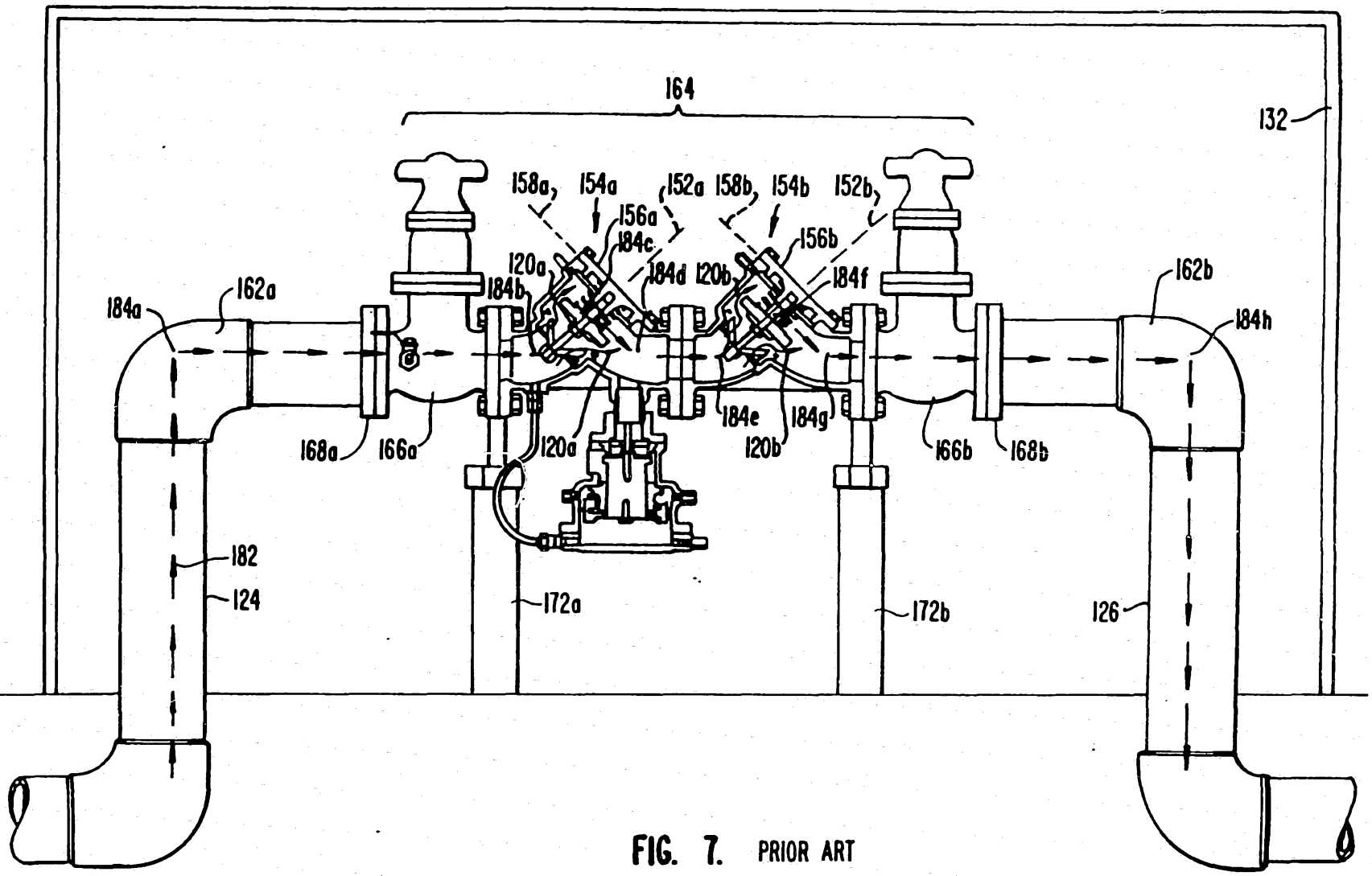

FIG. 7. PRIOR ART

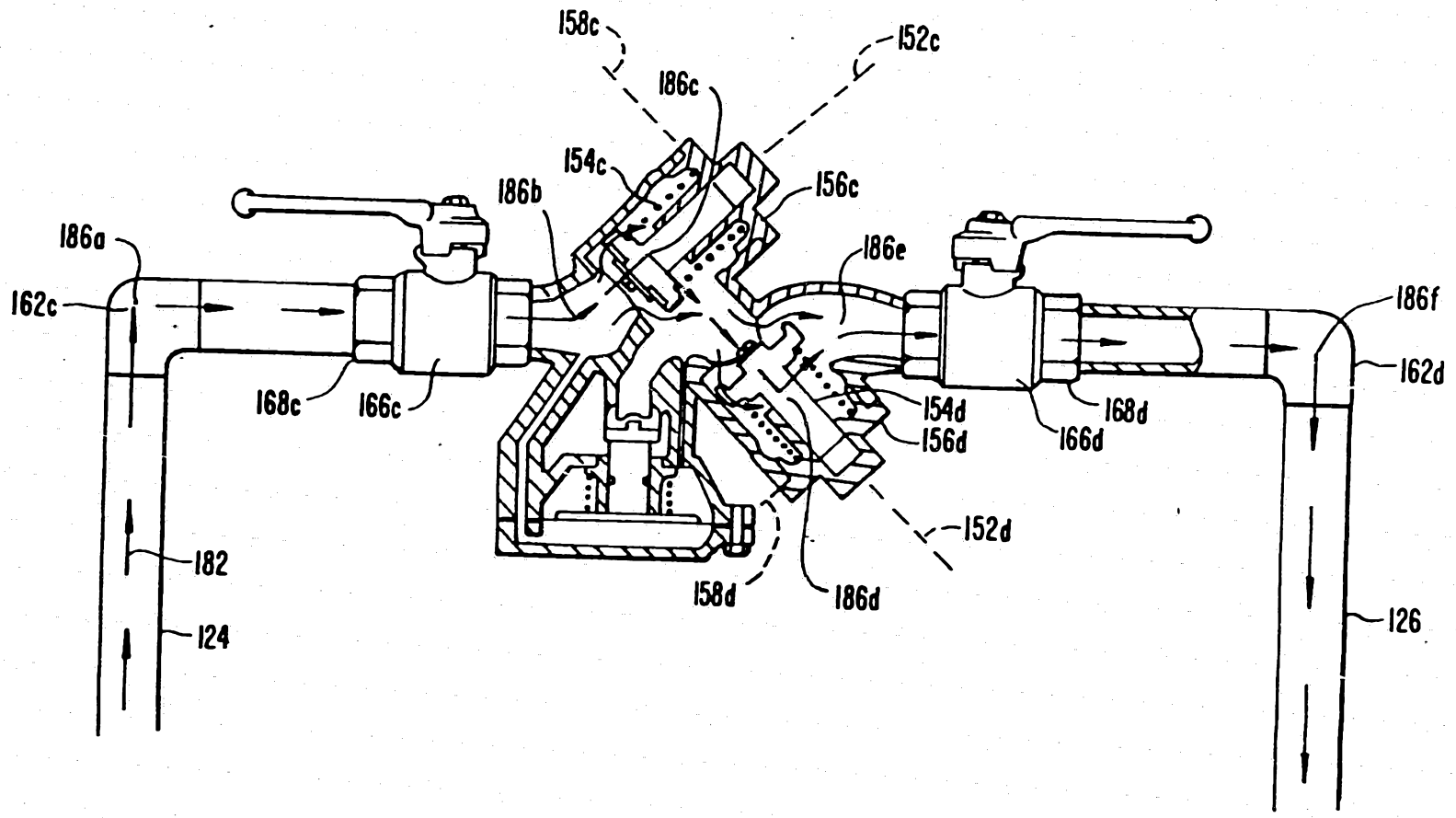

FIG. 8. PRIOR ART

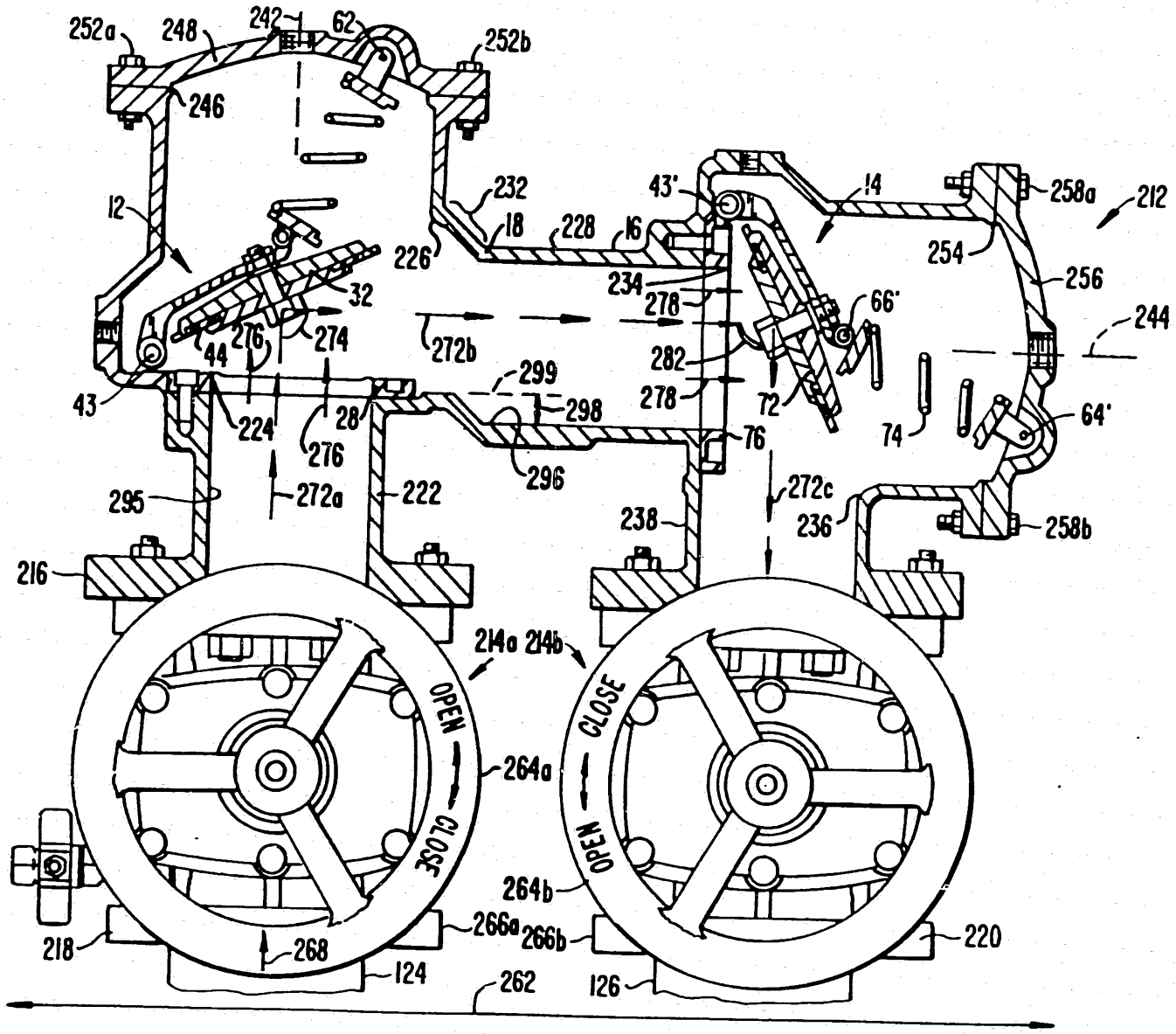
252a
248
242
62
252b
246
12
232
43'
14
258a
212
18
228
16
226
254
234
256
278
66'
32
244
44
276
274
272b
282
299
43
224
28
298
278
72
64'
276
76
74
296
295
272a
222
272c
238
236
258b
216
214a 214b
OPEN
CLOSE
264a
OPEN
CLOSE
264b
218
268
266a
266b
220
124
262
126

FIG. 9.

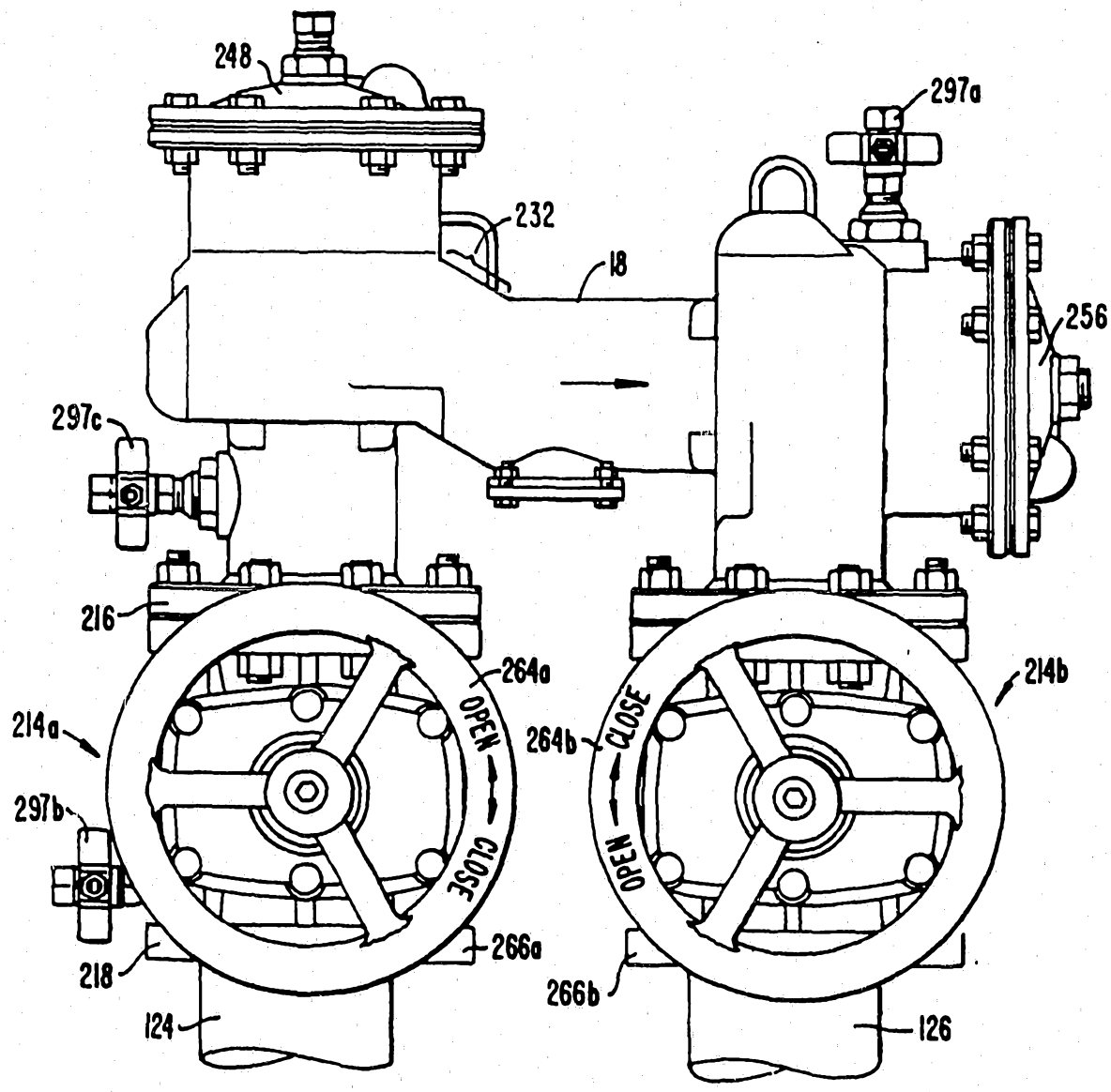
248
297a
232
18
256
297c
216
264a
214b
214a
264b
OPEN
CLOSE
CLOSE
OPEN
297b
218
266a
266b
124
126

FIG. 10.

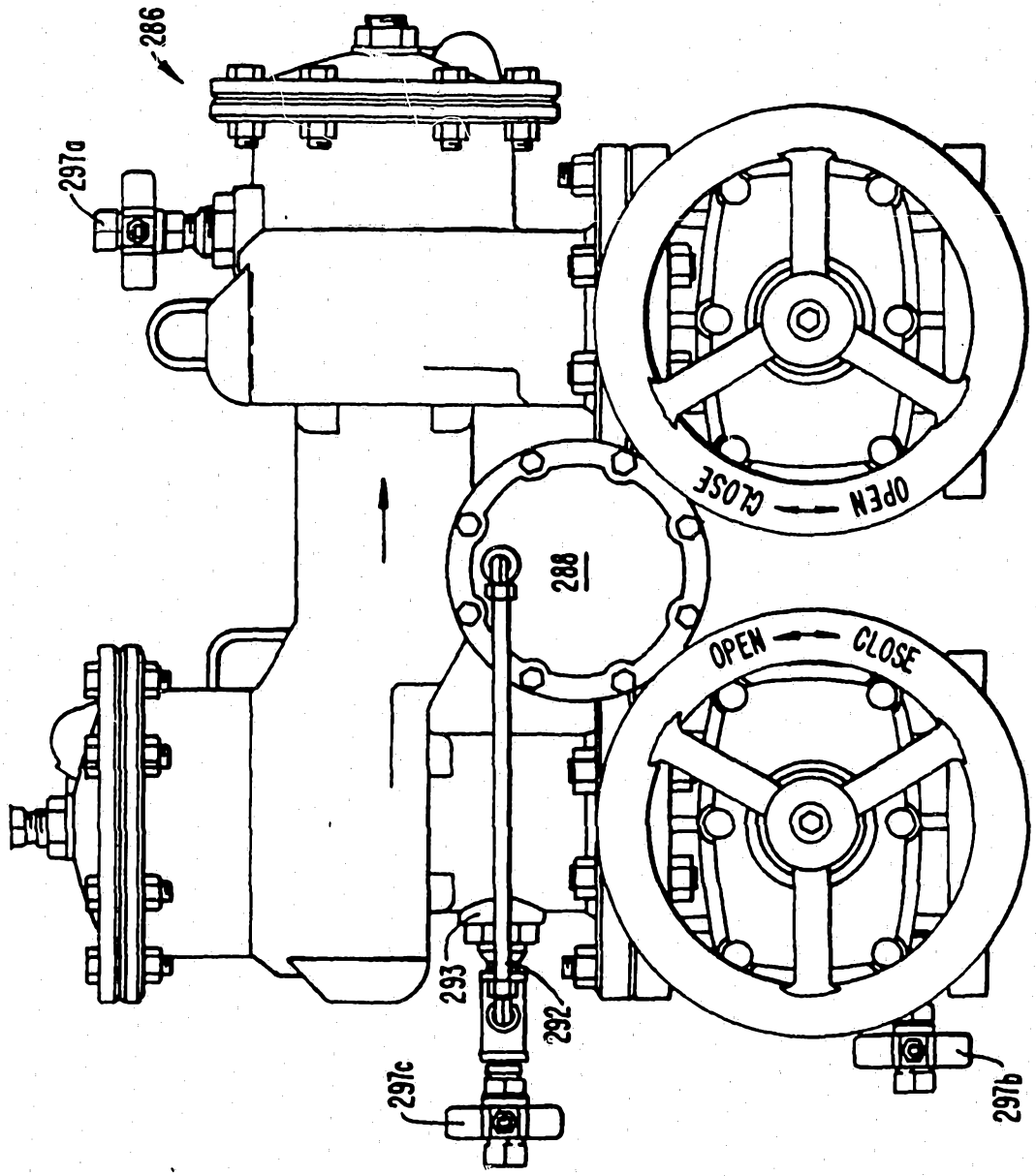

FIG. 11.

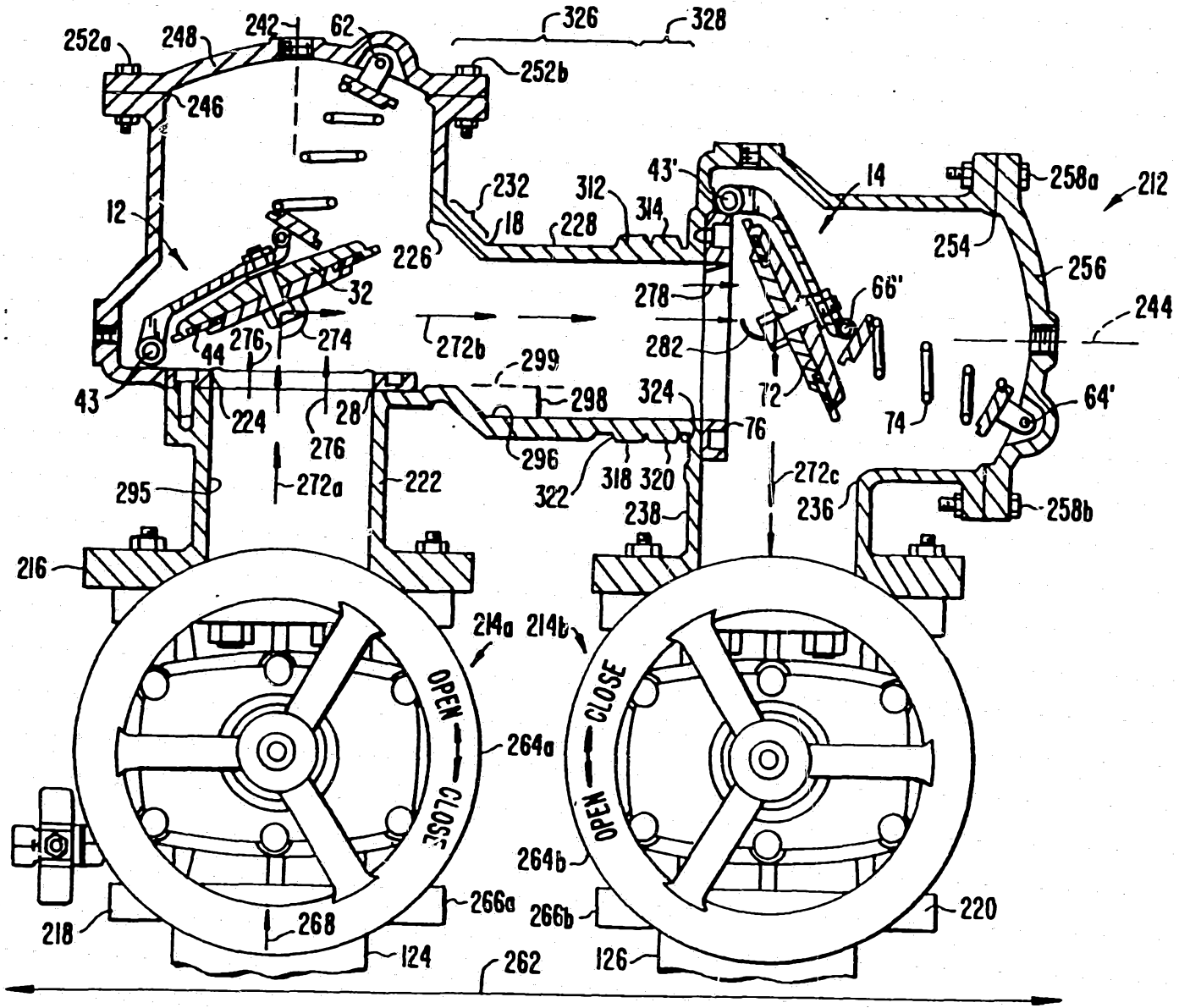

FIG. 12.

SUBSTITUTE SHEET

37892/93

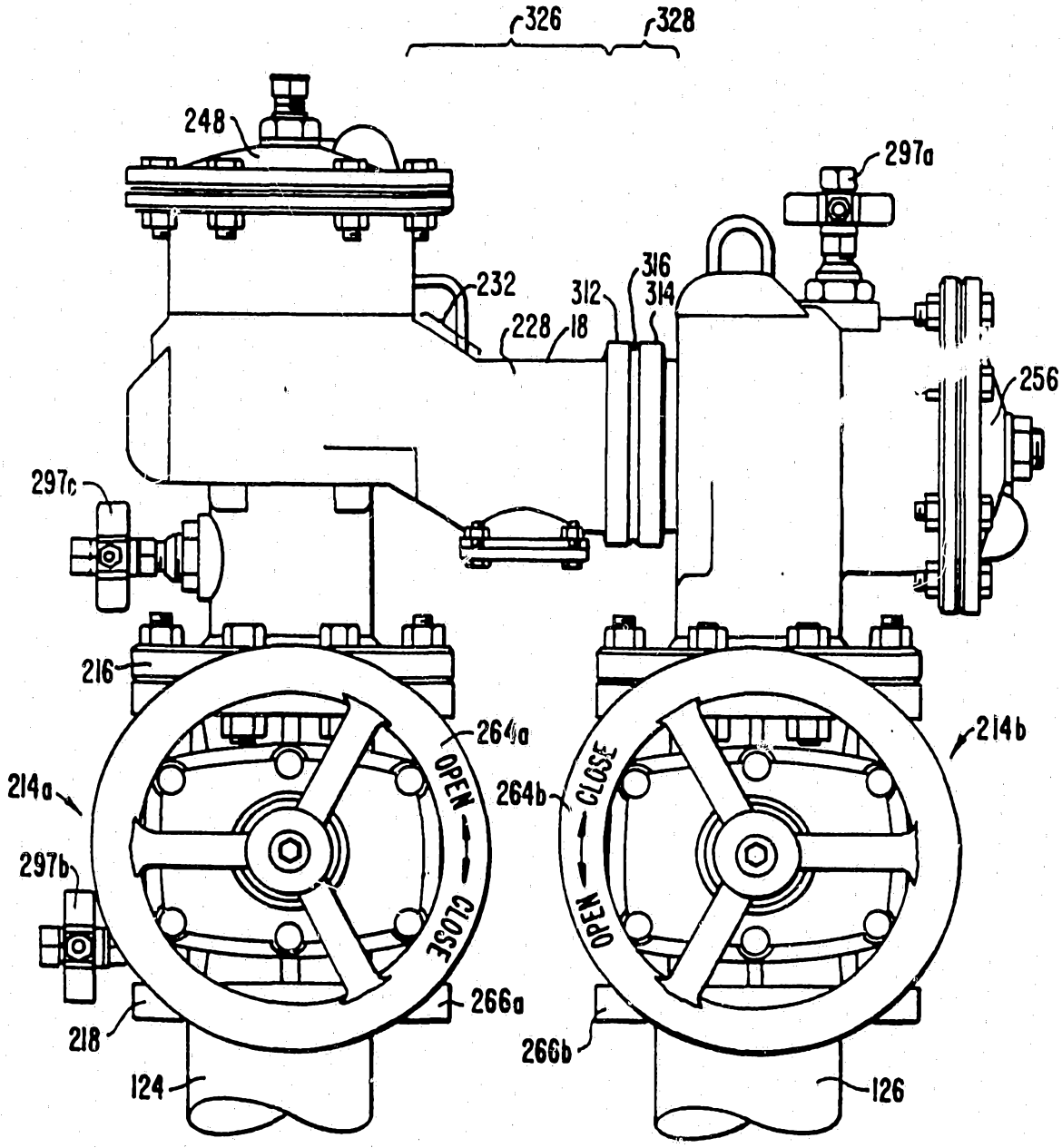

FIG. 13.

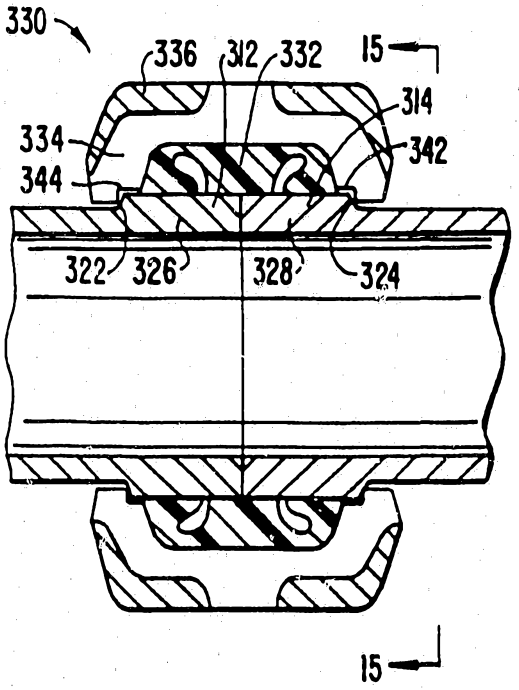
330
336
312
332
15
314
334
342
344
322
326
328
324
15

FIG. 14.

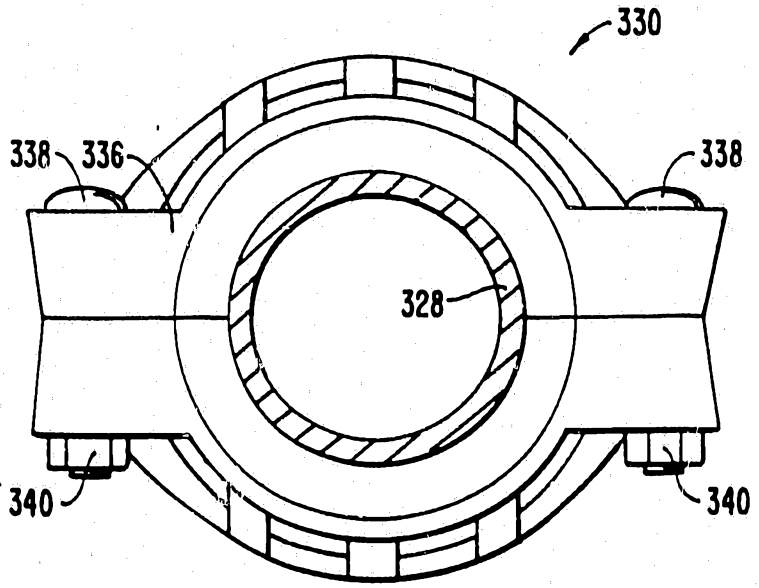
330
338
336
338
328
340
340

FIG. 15.

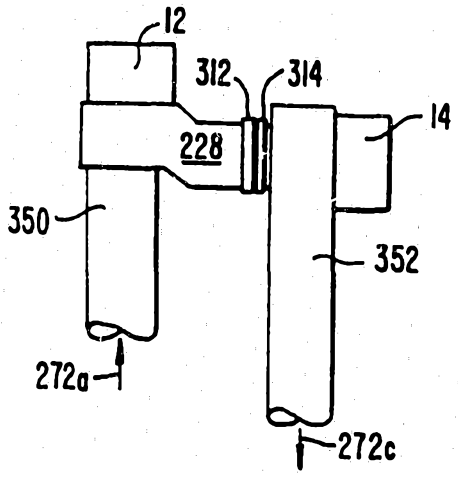

FIG. 16A.

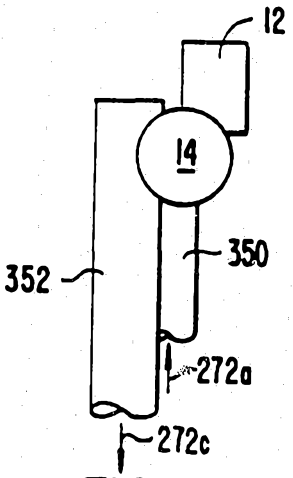

FIG. 16B.

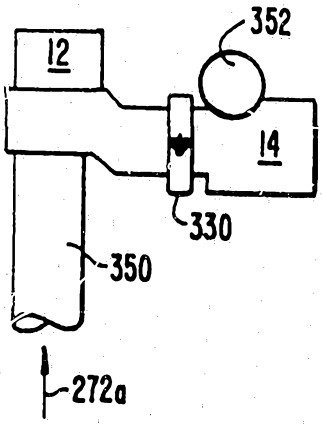

FIG. 17A.

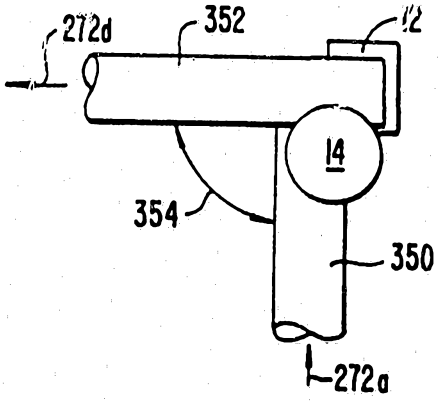

FIG. 17B.

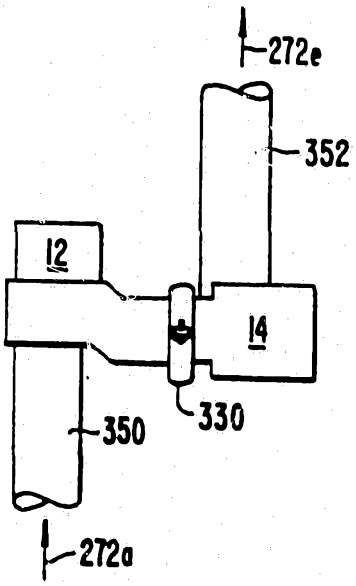

FIG. 18A.

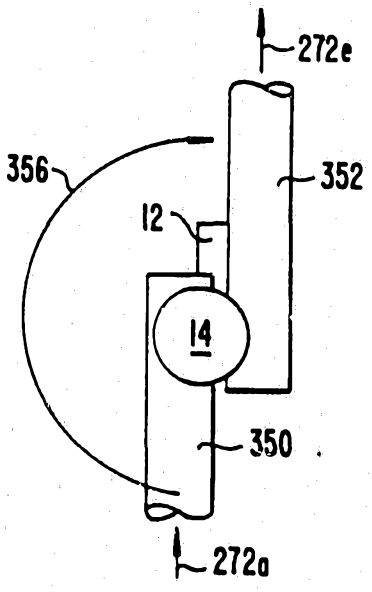

FIG. 18B.

INTERNATIONAL SEARCH REPORT

Int.. ational application No.
PCT/US93/01958

A. CLASSIFICATION OF SUBJECT MATTER

IPC(5) :F16K 15/03
US CL :137/15,512,527,271;285/4
According to International Patent Classification (IPC) or to both national classification and IPC

B. FIELDS SEARCHED

Minimum documentation searched (classification system followed by classification symbols)

U.S. : 137/270,614.2;285/112

Documentation searched other than minimum documentation to the extent that such documents are included in the fields searched

Electronic data base consulted during the international search (name of data base and, where practicable, search terms used)

C. DOCUMENTS CONSIDERED TO BE RELEVANT

Category*	Citation of document, with indication, where appropriate, of the relevant passages	Relevant to claim No.
X Y	US,A, 1,978,507 (Rand) 30 October 1934 See figures 1 and 7.	1,3,5,7 2,6,8,9
X Y	"Backflow Prevention" Catalog, Cla-Val Co., P.O. Box 1325, Newport Beach, Ca. 92663. 1978 See entire document.	1,3,4,5,7 2,6,8,9
Y	US,A, 1,783,605 (Della) 02 December 1930 See entire document.	2,6,8
A,P	US,A, 5,107,888 (Dunmire) 28 April 1992 see claim 12.	9
A	US,A, 2,586,942 (Grove) 26 February 1952 see figure 2.	1-9

[X] Further documents are listed in the continuation of Box C. [ ] See patent family annex.

*	Special categories of cited documents:	"T"	later document published after the international filing date or priority date and not in conflict with the application but cited to understand the principle or theory underlying the invention
"A"	document defining the general state of the (illegible) which is not considered to be part of particular relevance	"X"	document of particular relevance; the claimed invention cannot be considered novel or cannot be considered to involve an inventive step when the document is taken alone
"E"	earlier document published on or after the international filing date	"Y"	document of particular relevance; the claimed invention cannot be considered to involve an inventive step when the document is combined with one or more other such documents, such combination being obvious to a person skilled in the art
"L"	document which may throw doubts on priority claim(s) or which is cited to establish the publication date of another citation or other special reason (as specified)	"&"	document member of the same patent family
"O"	document referring to an oral disclosure, use, exhibition or other means		
"P"	document published prior to the international filing date but later than the priority date claimed		

Date of the actual completion of the international search 20 APRIL 1993	Date of mailing of the international search report 24 MAY 1993
Name and mailing address of the ISA/US Commissioner of Patents and Trademarks Box PCT Washington, D.C. 20231 Facsimile No. NOT APPLICABLE	Authorized officer JOHN RIVELL Telephone No. (703) 308-2599

Form PCT/ISA/210 (second sheet)(July 1992)*

INTERNATIONAL SEARCH REPORT

... ernational application No.
PCT/US93/01958

C (Continuation). DOCUMENTS CONSIDERED TO BE RELEVANT

Category*	Citation of document, with indication, where appropriate, of the relevant passages	Relevant to claim No.
A	US,A, 3,995,888 (McIlroy) 07 December 1976 See figure 1.	1-9
A	Us,A, 3,908,208 (McIlroy) 30 September 1975 see figure 1.	1-9
A	US,A, 4,408,788 (Beukema) 11 October 1983 see figure 2.	1-9
A,P	US,A, 4,991,622 (Brewer et al.) 12 February 1991 see figures 1a,1b,1c,1d.	1-9