Feb. 28, 1967 A. SCHWEBEL 3,306,607

LIFT CONTROL DEVICE FOR STACKS OF SHEETS

Filed July 16, 1964

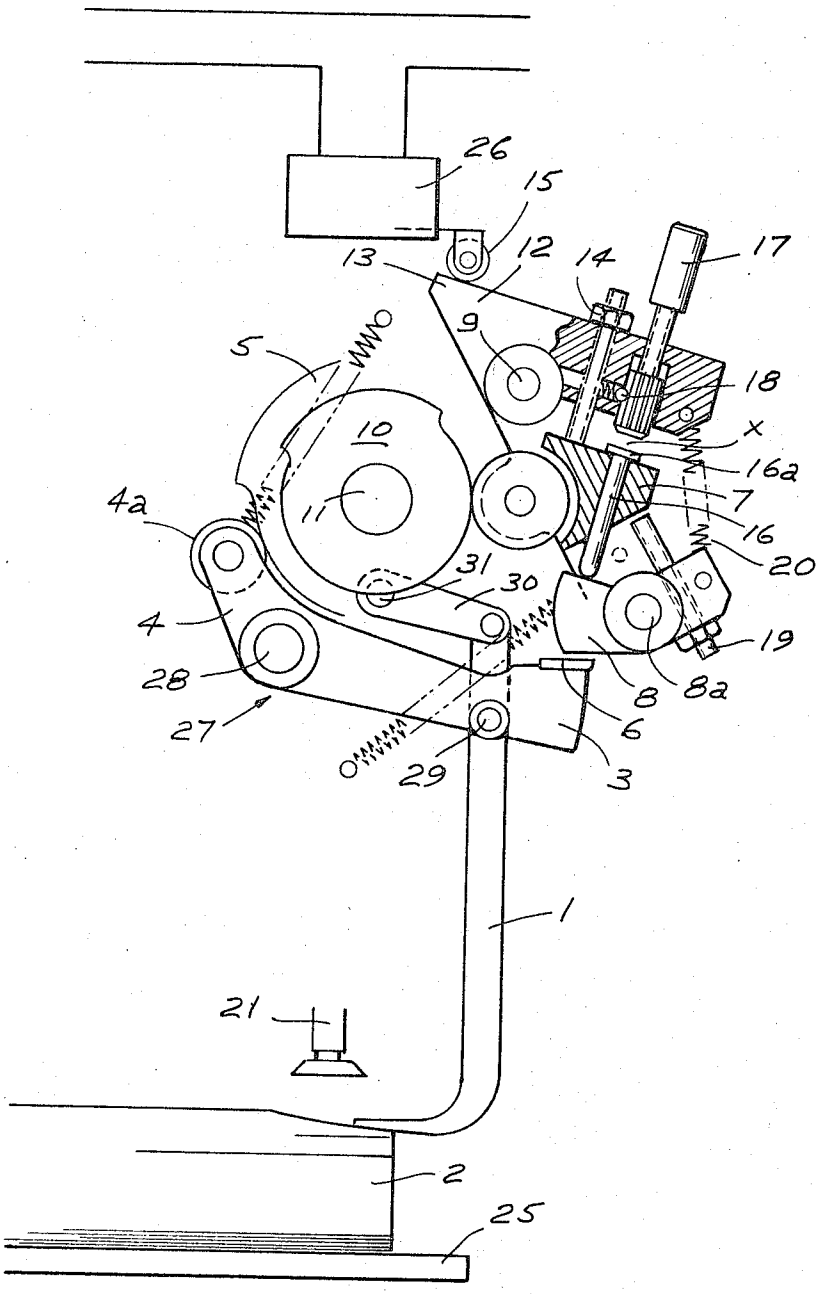

INVENTOR.
ADOLF SCHWEBEL
BY Hane and Nydick
ATTORNEYS

United States Patent Office

3,306,607

Patented Feb. 28, 1967

3,306,607

LIFT CONTROL DEVICE FOR STACKS OF SHEETS

Adolf Schwebel, Offenbach am Main, Germany, assignor to Mabeg Maschinenbau G.m.b.H. Nachf., Hense & Pleines G.m.b.H. & Co., Offenbach am Main, Germany, a German company

Filed July 16, 1964, Ser. No. 383,140
11 Claims. (Cl. 271—31)

The present invention relates to a control device controlling motor-operated lifting means for lifting a stack or pile of sheets which is gradually depleted by successive withdrawal of sheets for use in a sheet-using machine such as a printing press and, more particularly, to a control device of this kind in which a periodically up and down reciprocated foot presses against the top sheet of the stack in its lowermost position and controls the operation of the lifting means whereby the period of operation of the lifting means and with it the extent of the lifting of the stack are preferably adjustable.

There are known control devices of the general kind above referred to in which the lifting of the stack is controlled by components of the machine such as the sheet pick-up means, the pressure foot, a stack level detector, etc., when and while successive sheets are withdrawn from the top of the stack. Such control devices include cams effecting activation of the lifting means for a predetermined lifting of the stack in timed relationship with the level detecting means of the device. An arrangement of this kind has the disadvantage that in high speed machines the cams cause energization of the lifting means for a time which may be too short to effect the required lifting of the stack and in machines operating at low speeds for a time which is too long. As a result the stack may not be lifted sufficiently to be within the operational reach of the sheet pick-up means, or it may be lifted so high that the pick-up means are damaged.

Another known control device of the general kind above referred to attempts to eliminate the aforementioned disadvantage by metering current to the lifting means by means of the discharge of a capacitor.

In still another control device the power supply for the lifting means is controlled by potentiometers. Such an arrangement requires a substantially constant voltage supply which is not always available from the power means.

It is also known to provide a control device in which a periodically reciprocated slide supports suitable switching means controlling the stack lifting means in conjunction with a stack level detector. Such an arrangement requires a considerable number of heavy and thus rather inert components and as a result the device is not suitable for the high speed of modern machines in which the detector is only in very brief contact with the top surface of the stack.

It is a broad object of the present invention to provide a novel and improved control device of the general kind above referred to which is independent of the prevailing voltage conditions and the specific material from which the sheets are made and which is capable of operating either with high speed machines or with low speed machines.

A more specific object is to provide a novel and improved control device of the general kind above referred to which assures that the stack as it is being depleted, is always lifted to a level which on one hand is sufficient to bring the top level of the stack within the effective reach of the sheet pick-up means and on the other hand does not cause damage to the sheet pick-up means.

Other objects, features and advantages of the invention will be pointed out hereinafter and set forth in the appended claims constituting part of the application.

Broadly, the invention resides in providing a pressure foot which also functions as a stack-level detector and coacts, preferably by means of a nose, with a movable intermediate control member in engagement with a second displaceable control member whereby the position of the second control member is controlled by the position of the detector which in turn is controlled by the top level of the stack.

The second control member coacts at one end with a movable switch control element which controls the switch controlling the power supply for the stack lifting means in accordance with the stack level. Said one end of the second control element and the switch control element are separated from each other by a preferably adjustable distance which is controlled by the top level of the stack so that the second control member will effect control of the power supply switch only when the stack is lifted through a distance corresponding to the aforementioned distance between said one end of the second control element and the switch control element.

In the single figure of the accompanying drawing a preferred embodiment of the control device according to the invention is shown by way of illustration and not by way of limitation.

Referring now to the figure in detail, the figure shows a table **25** supporting a stack or pile **2**. The table is lifted by a power drive means such as a motor **26**, the operation of which is controlled by a switch **15**. The table-lifting mechanism including the transmission means coupling table **25** to motor **26** is conventional and does not constitute part of the invention. Accordingly, it is not described or illustrated in detail.

Sheets are successively withdrawn from the top layer of stack **2** thereby gradually depleting the stack. The sheet pick-up means are diagrammatically indicated by a suction head **21** and also do not constitute part of the invention.

Turning now to the control device according to the invention, the device comprises a foot **1** engageable with the top surface of stack **2**. The foot has two purposes, one being to prevent an undesired transportation or displacement of the sheet or sheets just below the top sheet lifted by suction cup **21** and the other being a detecting function to detect continuously the level of the stack and to control the level so that it is continually at the proper distance from the pick-up device **21**.

To this end, foot **1** is moved periodically into and out of engagement with stack **2** by means of bell crank lever **27** pivotal about a stationary pivot pin **28**. Lever **27** has an arm **3** linked at **29** to foot **1** and mounting a nose **6** coacting with a first control member **7** and, more specifically, with a movable arm **8** thereof pivotal about a pivot pin **8***a* on the main body of control member **7**. The second arm **4** of lever **27** mounts a roller **4***a* constituting a cam follower coacting with a rotary camming surface **5**. Foot **1** is at its upper end linked to an arm **30** which, in turn, is pivotal about a stationarily mounted pivot **31**. As it is evident from the previous description, rotation of camming surface **5** will impart to foot **1** a combined lifting and swinging motion toward and away from stack **2**.

Control member **7** is periodically reciprocated about a stationary pivot **9** by means of a cam follower **11** coacting with a second rotary camming surface **10**. Pivot **9** further supports a second control member **12** which has a nose portion **13** coacting with motor switch **15** controlling motor **26** as previously stated. Control member **12** is coupled with control member **7** by means of an adjustable set screw **14** which maintains members **7** and **12** in a selected position in reference to each other.

A control pin **16** is slidable in control member **7**. One end of pin **16** abuts against pivotal arm **8**. The other end of pin **16** is headed at **16***a* to retain pin **16** in member **7**.

The angular position of arm 8 in reference to member 7 is controlled by a set screw 19. A loaded spring 20 maintains the hereinbefore described system in equilibrium.

Pin head 16*a* coacts with a switch control element 17 disposed in alignment with pin 16 and lengthwise adjustable in reference thereto. Such control element constitutes an abutment element for the pin. The distance *x* between head 16*a* and the adjacent face of control element 17 controls the distance through which stack 2 is lifted for each operational cycle of foot 1 and the components associated therewith. Suitable fastening means indicated as lengthwise grooves in control element 17 and a spring loaded ball 18 are provided to maintain control element 17 in any adjusted position, thereby preventing undesired variations of distance *x* and with it of the lift of stack 2 due to shocks and vibrations to which the control device may be exposed.

The energizing circuit for the motor may include a conventional capacitor-potentiometer assembly (not shown) to provide additional motor control.

The operation of the control device as hereinbefore described, is as follows:

In the position as shown it is assumed that switch 15 closes the motor circuit so that stack 2 is being gradually lifted. As the lifting of stack 2 continues, lever arm 3 through the agency of its nose 6 and pivot arm 8 will displace control pin 16 until pin head 16*a* reaches control element 17 in its adjusted position in control member 12. Continued lifting of stack 2 and with it continued lifting of control pin 16 will cause tilting of control member 12 whereby switch 15 is opened thus stopping further lifting of stack 2 in the desired position in reference to pick-up device 21.

Instead of continuous lifting of stack 2, the stack can also be lifted in small increments, namely by connecting and disconnecting the motor circuit in accordance with the swinging movements of foot 1 correlated with the successive withdrawal of sheets. In this mode of operation the stepwise lifting of the stack will continue until the distance *x* is bridged by pin 16 and control member 12 is tripped as previously described.

The power to effect lifting of the stack may be supplied by an adequately dimensioned capacitor. The use of such a capacitor has the advantage of protecting the entire installation against failures or accidents as they may occur when the installation is operated, without a stack on the table or without an appropriate table or prior to the setting-up on the installation.

As it is apparent from the previous description, the control device of the invention is simple and inexpensive. It does not require comparatively slow and not very reliable relays. No specific electric or electronic components are necessary, but merely simple mechanical components. Furthermore, the desired lifting distance as represented by the distance *x* can be adjusted at any time, even when the machine is operating by simply adjusting set screw 17.

While the invention has been described in detail with respect to a certain now preferred example and embodiment of the invention, it will be understood by those skilled int he art, after understanding the invention, that various changes and modifications may be made without departing from the spirit and scope of the invention, and it is intended therefore to cover all such changes and modifications in the appended claims.

What is claimed as new and desired to be secured by Letters Patent is:

1. A control device for controlling lifting means for lifting a stack of sheets from which sheets are successively withdrawn by sheet pick-up means acting upon the top of the stack, said control device comprising a switch means for controlling a power supply for said lifting means, a movable detector sensing the top level of the stack and engageable therewith in pressure engagement, a first movable control member engageable with said detector for positioning said control member by the position of said detector, and a second movable control member engageable with said switch means to actuate the same for disconnecting said power supply, said first control member including a support member and a control pin slideable in said support member and engageable with said second control member, the lengthwise position of said pin being controlled by said detector and controlling the position of said second control member in reference to the switch means, movement of the detector into a position corresponding to a predetermined top level of the stack moving said pin into a position in which the second control member is positioned to engage the switch means for the purpose aforesaid.

2. A control device according to claim 1 and comprising first mounting means pivotally supporting said support member, second mounting means supporting said detector displaceable up and down in reference to the top level of said stack and swingable into and out of engagement therewith, first rotary cam means coacting with said first mounting means to reciprocate the latter about its pivot axis and second rotary cam means coacting with the second mounting means to impart to said detector reciprocatory up and down movements and swinging movements into and out of engagement with the top level of the stack.

3. A control device according to claim 1 wherein said second control member comprise a pivotally mounted support member and a control element adjustable in reference thereto, the position of said control element controlling the distance through which the first control member must move before engaging said second control member for controlling said switch means whereby the stack is lifted until the lifting means therefor are disconnected.

4. A control device according to claim 3 wherein said control element comprises a bolt gradually lengthwise displaceable in its support member and thereby in reference to said first control member.

5. A control device according to claim 4 and comprising releasable locking means for locking said bolt in a selected lengthwise position.

6. A control device according to claim 5 wherein said locking means comprise lengthwise circumferentially spaced grooves in said bolt, and a spring-loaded ball engageable with any of said grooves.

7. A control device according to claim 1 wherein said movable detector comprises a foot movable into and out of pressure engagement with the top layer of said stack and a nose moving in unison with said foot, and wherein said first control member includes a movable control element engageable with said nose and said pin, the position of said control element being controlled by said nose and controlling the lengthwise position of said pin, and wherein spring means bias said first control element into engagement with said nose.

8. A control device according to claim 7 comprising a support member supporting said second control element lengthwise slidable in reference thereto, and limit means limiting the slidable movement of said second control element toward said first control element.

9. A control device for controlling lifting means for lifting a stack of sheets from which sheets are successively withdrawn by sheet pick-up means acting upon the top of the stack, said control device comprising a switch means for controlling an electric power supply for said lifting means, a movable detector, means coacting with said detector for intermittently moving the same into a position of engagement with the top of the stack for detecting the level thereof and into a position lifted above the top of the stack, a lengthwise displaceable control pin, a movable sensing member coacting with said detector for positioning by the same and engaged with one end of said control pin for displacing the pin in accord-

ance with the position of the detector, and a switch control member movable between a rest position disengaged from said switch means and an operating position engaging said switch means to operate the same for disconnecting said power supply, said switch control member being engaged with the other end of said displaceable control pin for movement of the switch control member into its operating position in response to a displacement of the pin by said sensing member.

10. A control device according to claim **9**, wherein an abutment element is movably supported on said switch control member, said abutment element being engageable with said other end of the control pin, and wherein adjustment means are provided on the switch control member for adjusting the position of said abutment element on the switch control member, thereby correspondingly varying the distance of displacement of the control pin before the same is engaged with the abutment element.

11. A control device according to claim **10**, wherein said adjustment means are means for gradually varying the position of the abutment element in reference to the switch control member, and locking means for locking the abutment element in a selected position on the switch control member.

References Cited by the Examiner

UNITED STATES PATENTS

2,266,596	12/1941	Goodwin	271—62
2,838,306	6/1958	Williams	271—62 X
3,006,638	10/1961	Geinzer	271—62

M. HENSON WOOD, JR., *Primary Examiner.*

ROBERT B. REEVES, *Examiner.*

R. A. SCHACHER, *Assistant Examiner.*