D. R. BOWLING.

WASHING-MACHINES.

No. 194,408. Patented Aug. 21, 1877.

Fig. 1.

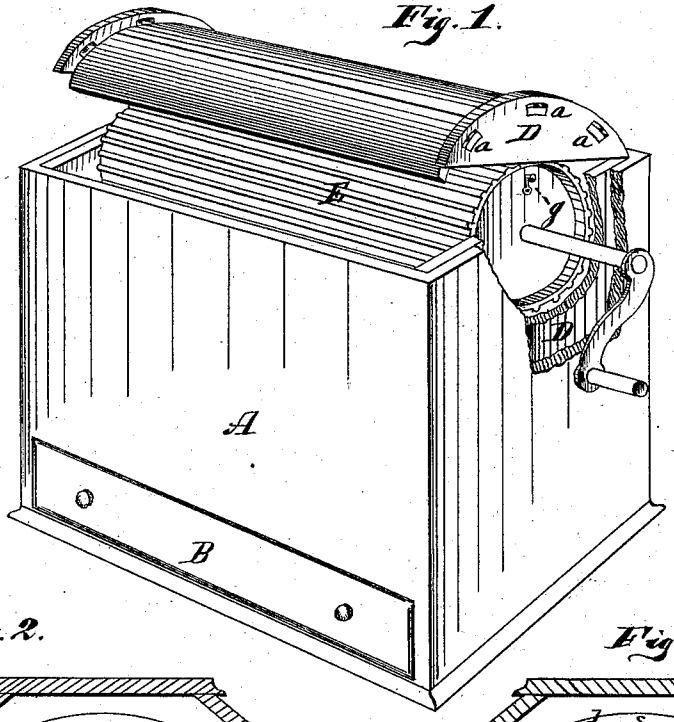

Fig. 2.

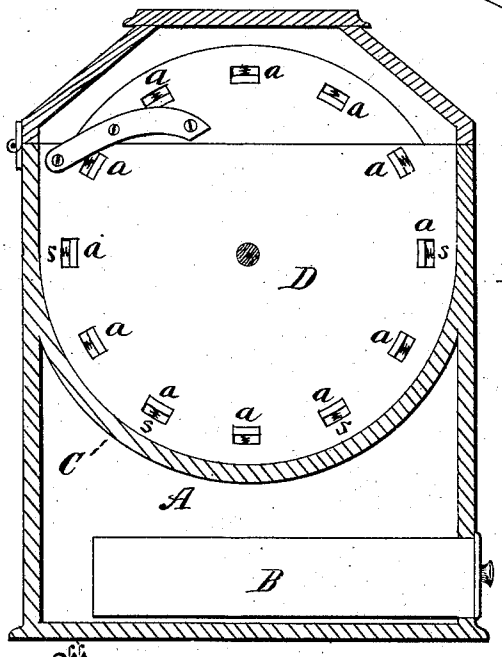

Fig. 3.

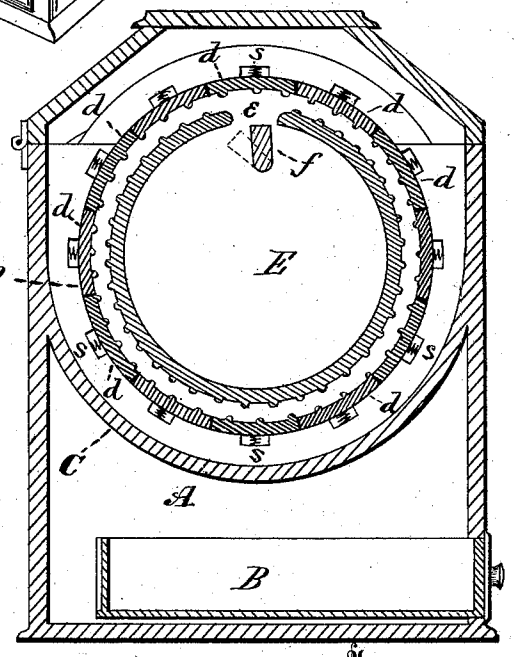

Witnesses

J. A. Pollock.

G. Smith

David R. Bowling, Inventor

By Connolly Bros. & Hopkins Attorneys

N. PETERS, PHOTO-LITHOGRAPHER, WASHINGTON, D. C.

UNITED STATES PATENT OFFICE.

DAVID R. BOWLING, OF DRAVOSBURG, PENNSYLVANIA.

IMPROVEMENT IN WASHING-MACHINES.

Specification forming part of Letters Patent No. **194,408**, dated August 21, 1877; application filed June 11, 1877.

To all whom it may concern:

Be it known that I, DAVID R. BOWLING, of Dravosburg, in the county of Allegheny and State of Pennsylvania, have invented certain new and useful Improvements in Washing-Machines; and I do hereby declare the following to be a full, clear, and exact description of the invention, such as will enable others skilled in the art to which it pertains to make and use it, reference being had to the accompanying drawings, which form part of this specification, in which—

Figure 1 is a perspective of the machine without its cover. Fig. 2 is a transverse vertical section at the end. Fig. 3 is a similar section at the middle.

This invention has relation to that class of washing-machines in which a fluted cylinder rotates within an outer cylinder or casing, having elastic sections to compress the clothes; and it consists in the novel construction, combination, and arrangement of parts, as hereinafter described and claimed.

A designates a box or casing, in which I introduce a drawer, B, for holding soap or any other articles desirable. Crossing the box is a cylindrical water-tight partition, C. Above this is located the washing mechanism, which is as follows:

Standing in the trough thus formed is a cylinder, D, whose heads just fit the trough to secure steadiness, but the cylinder itself is smaller than the diameter of the trough, to make room for the circulation of water. Cylinder D is built up of separate longitudinal sections *d*, fluted on the interior, or otherwise constructed with a rubbing-surface, whose ends enter slots *a* in the heads of the cylinder D, and are there fitted with yielding springs *s*, so that the whole cylindrical surface can yield outwardly to any extent that may be desired. This cylinder and its heads are cut into two portions, the smaller of which forms a lid, and may be hinged or not, as desired. Situated inside of cylinder D, and a trifle smaller than its interior diameter, to make space for the passage of articles to be washed, is a cylinder, E, having its outer surface formed for rubbing by corrugations, flutings, or otherwise. This cylinder is fitted with an axis, and is intended for continuous revolution, or a reciprocating motion, as may be found most suitable under varied circumstances by means of a hand-crank or other means.

The cylinder E is hollow, and forms a receptacle for the articles to be washed, where they may soak, and always be in readiness. Access to this receptacle is had by means of a longitudinal slit, *e*, in the cylinder. A latch-bar, *f*, turning on pivots at the ends, lies in this slit, or inside, and is adjustable by means of the hand-piece *g* on the outside of one of the heads of cylinder E, accessible when the lid of cylinder D is up. The object of this latch-bar is to firmly hold articles against slipping, and losing the effect of rubbing, as well as to furnish means whereby a large article can be washed. This is effected by drawing, say, one-half of a sheet out through the slit, fastening it by the latch-bar, and, after the protruding portion has been washed, reversing positions and washing the other portion. Thus, after washing one spot there is no necessity of doing double work by having it pass through the operation a second time to get at other parts. Hence, much time and labor are saved to the operator—a result no less satisfactory than economical. Both cylinders are made with loose joints, or special openings, as preferable, for the free circulation of the wash-water. The springs *s* may be of gum, steel, or other material. The yielding sections of cylinder D make it impossible for the articles to clog, while the whole operation is entirely within the capacity of a child. Cylinder D closes entirely upon cylinder E, and the casing A closes upon cylinder D; hence, there can be no splashing or dirt; also, since no necessity arises for the operator to plunge the hands into the water, the latter may be used boiling, thereby more quickly cleansing the articles, and enhancing the value of the machine. Being cased in a handsome cabinet, it can be placed in an apartment where, if its true character of washing-machine were readily distinguishable, it would not be tolerated.

The clothes-receptacle, instead of having a permanent slit might have a section removable and attachable by means of a latch or catch properly disposed, and thus the con-

tinuity of the rubbing-surface would be preserved.

Having thus fully described my invention, what I claim as new, and desire to secure by Letters Patent, is—

The outer cylinder D, composed of yielding corrugated slats attached to slotted heads, containing springs *s*, said cylinder being constructed in two sections hinged together, substantially as and for the purpose set forth.

In testimony that I claim the foregoing I have hereunto set my hand this 28th day of September, 1876.

DAVID R. BOWLING.

Witnesses:

F. A. POLLOCK,

THOS. J. MCTIGHE.