July 2, 1935. H. J. SCHORLE 2,006,561

PILE DRIVING APPARATUS

Filed Sept. 27, 1934

Fig. 1.

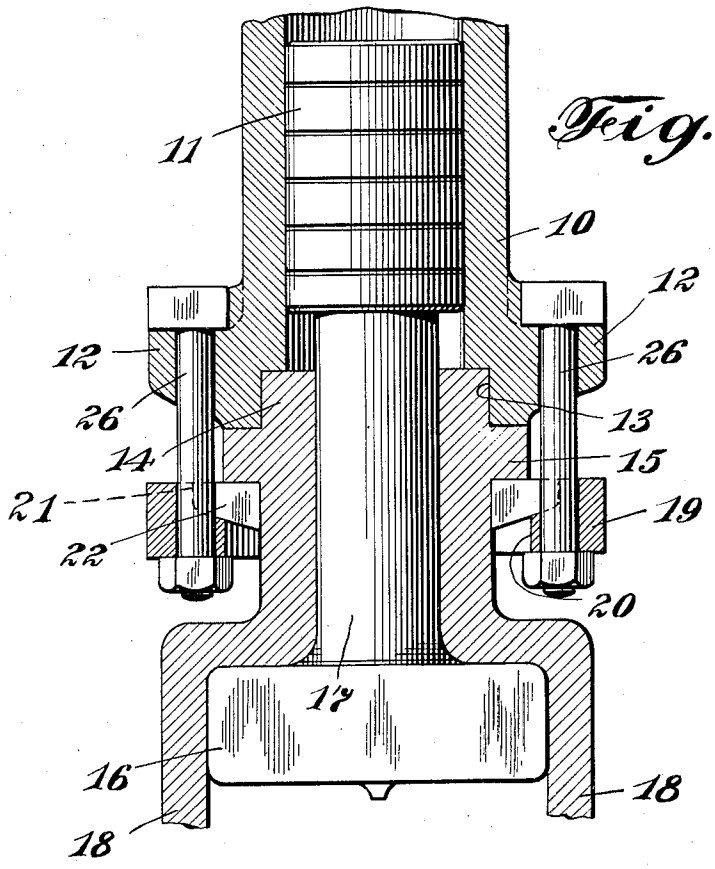


Fig. 2.

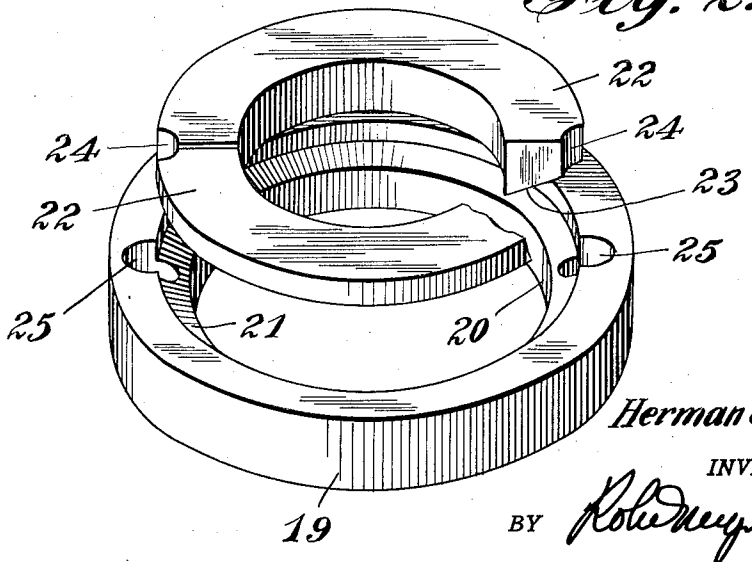


Herman J. Schorle
INVENTOR

BY Robt. Meyer
ATTORNEY

Patented July 2, 1935 2,006,561

# UNITED STATES PATENT OFFICE

2,006,561

## PILE DRIVING APPARATUS

Herman J. Schorle, Astoria, N. Y., assignor to Worthington Pump and Machinery Corporation, New York, N. Y., a corporation of Virginia

Application September 27, 1934, Serial No. 745,653

11 Claims. (Cl. 61—76)

This invention pertains to pile driving apparatus and more particularly to an attachment adapted to be used in conjunction with a percussive tool of standard design.

Most percussive tools such as air hammers and the like are equipped with a transversely projecting handle and with hose connections through which the air or other fluid passes from the receiver to the percussive tool. The attachment forming part of the present invention is adapted to be secured at the forward end of the air hammer and is normally held in a fixed angular relation with respect thereto. Guides project from the pile driving attachment which embrace the sides of the piling or sheeting material and also serve as a guide for directing the motion of the anvil block or driving cap which imparts the blow to the piling material.

When the entire unit is being used in close quarters, the handle and the hose connections of the percussive tool often interfere with obstacles such as for instance adjacent piling members or guide braces supporting the piling members. On such occasions it has been found advantageous to turn the rearward portion of the tool with respect to the pile driving attachment secured at its forward end.

The primary object, therefore, of the present invention is directed to means whereby the pile driving attachment may be adjustably turned to any position with respect to the percussive tool and secured in that position.

A second object of the present invention is to provide means whereby the pile driving attachment may be removed from the percussive tool without completely removing the fastening means.

A still further object of the present invention is directed to a construction whereby vibration will tend to more securely hold the pile driving attachment in its fixed position with respect to the percussive tool.

With these and other objects in view as may appear from the accompanying specification, the invention consists of various features of construction and combination of parts, which will be first described in connection with the accompanying drawing, showing a pile driving apparatus of the preferred form, and the features forming the invention will be specifically pointed out in the claims.

In the drawing:

Fig. 1 is a longitudinal cross sectional view of a pile driving attachment embodying a preferred construction secured in operating position to a percussive tool of standard design.

Fig. 2 is an isometric view of the retaining ring forming part of the present invention and its associated segmented annulus.

Referring again to the drawing and more particularly to Fig. 1, the invention is shown adapted for use with a conventional air hammer having a cylinder 10 and its associated hammer piston 11. A plurality of lugs 12 formed at the forward end of the cylinder 10 provide means for securing the pile driving attachment to the percussive tool. The forward end of the cylinder is shown provided with an annular concentric groove 13 adapted to receive the front head 14. A flange 15 formed on the front head comes adjacent to the forward end of the cylinder when in the assembled position. A driving cap or anvil block 16 having a stem 17 is slidably mounted within said front head 14. A plurality of guide members or driving cap guides 18 project forwardly from said front head 14 and closely embrace the anvil block 16 as well as the sides of the piling or sheeting (not shown). A retaining ring 19 has an internal diameter or bored portion 20 slightly larger than the outside diameter of the front head flange 15 so that the retaining ring may be passed over the front head flange during the assembling operation. The retaining ring 19 is provided with an annular recess or groove 21 at its rearward face. A split ring or segmented annulus 22 is dimensioned to fit within said annular groove 21. The forward faces 23 of said split ring slope inwardly and forwardly to form a frusto-conical annulus. While in Figs. 1 and 2 the split ring is shown as an annulus split about a diametrical plane, it is to be understood that this ring may be made of any convenient number of sections. The forward portion of the annular groove 21 slopes in a direction corresponding with a forward face 23 of the split rings 22. The split rings 22 are grooved or recessed as at 24 to engage longitudinal fastening means. The retaining ring 19 is also provided with a plurality of correlated bores 25 adapted to receive fastening means or longitudinal bolts 26 extending from the lugs 12.

In assembling the apparatus the retaining ring 19 is passed over the flange 15 on the front head 14, and the split ring 22 is assembled in the annular groove 21. The front head is then engaged at the forward end of the cylinder; the assembled retaining ring and segmented annulus is lifted to engage the forward end of the flange 15, and the bolts 26 are passed from the lugs 12 through the

retaining ring 19 and the respective nuts tightened to wedge or constrict the flange 15 between the forward end of the cylinder 10 and the rearward surface of the segmented annulus. The angular relation of the driving cap guides with respect to the cylinder may be changed by loosening the nuts of the bolts 26 at which time the flange 15 will be free to turn with respect to the cylinder. It may thus be turned to any desired position and secured by tightening the nuts of the bolts 26.

The grooves in the split ring extending longitudinally and adapted to engage the fastening means 26 are shown in the preferred embodiment adjacent to the line of division which separates the respective segments of the split ring. It is to be understood, however, that these grooves may be formed at any desired position about the periphery of the respective segments.

The body of the front head is preferably made cylindrical and the internal diameter of the segments forming the split ring 22 is preferably made to closely engage the body of the front head as shown in Fig. 1. By having the forward surface of the split ring slope inwardly and forwardly as clearly shown in the drawing a wedging action is obtained both during the tightening movement and through the vibration of the tool which tends to force the inner diametrical portion of the split ring into engagement with the wall of the front head. In this manner the gripping action is distributed over a large area so that the split ring engages the front head not merely about the forward surface of the front head flange 15 but also about the wall of the front head immediately forward of the flange. A slight space is preferably left between segments so that the inner diametrical portion of the split ring will continue to engage the wall of the front head even after considerable wear has taken place.

If it is desired to substitute a different front head having guide members adapted to embrace a different style of piling material, the change may be effected without completely removing the bolts 26. In order to do this the nuts on the bolts 26 are loosened sufficiently to allow the respective segments of the split annulus to be removed from their position within the annular groove 21, at which time the flange 15 on the front head 14 may pass through the retainer ring 19, and the substitution effected.

It will be understood that the invention is not to be limited to the specific construction or arrangement of parts shown but that they may be widely modified within the invention defined by the claims.

What is claimed is:

1. In a pile driving attachment for percussive tools, the combination with a cylinder and a hammer piston associated therewith, of a front head rotatably mounted with respect to said cylinder, an anvil block free to oscillate within said front head, anvil block guides extending from said front head, and means for securing said front head in frictional engagement with said cylinder to lock said front head against rotary motion with respect to said cylinder.

2. In a pile driving attachment for percussive tools, the combination with a cylinder and a hammer piston associated therewith, of a front head, said cylinder being provided with a recess at its forward end, said front head rotatably mounted in said recess, an anvil block free to oscillate within said front head, anvil block guides extending from said front head, and means extending from said cylinder for securing said front head in frictional engagement with the walls of said recess to inhibit rotary motion of said front head with respect to said cylinder.

3. In a pile driving attachment for percussive tools, the combination with a cylinder and a hammer piston associated therewith, said cylinder being provided with an annular groove at its forward end, of a front head rotatably engaged in said annular groove, an anvil block within said front head, guide members surrounding said anvil block, a flange on said front head, and means engaging said flange for selectively securing said flange in engagement with said cylinder to inhibit relative rotary motion of said front head.

4. In a pile driving attachment for percussive tools, the combination with a cylinder recessed at its forward end, and a hammer piston within said cylinder, of a front head, a flange on said front head, said front head being rotatably mounted with respect to said recessed cylinder, said flange being adjacent to the forward end of said cylinder, guide members extending forwardly from said front head, an anvil block within said front head, and means associated with said flange for urging said flange against said cylinder to lock said guide members in any angular position with respect to said cylinder.

5. In a pile driving attachment for percussive tools, the combination with a cylinder and a hammer piston associated therewith, of a front head rotatably mounted with respect to said cylinder, a flange on said front head adjacent to the forward end of said cylinder, an anvil block within said front head, guide members extending from said front head and embracing said anvil block, annular means engaging the forward edge of said flange, and means extending from said cylinder and engaging said annular means for securing said flange rigidly to said cylinder.

6. In a pile driving attachment for percussive tools, the combination with a cylinder and a hammer piston associated therewith, of a front head, a flange on said front head, an anvil block within said front head, guide members extending forwardly of said front head, a retaining ring, a segmented annulus positioned adjacent to said retaining ring and engaging said flange, and means for constricting said flange between said cylinder and said segmented annulus.

7. In a pile driving attachment for percussive tools, the combination with a cylinder and a hammer piston associated therewith, of a front head, a flange on said front head, an anvil block within said front head, guide members extending forwardly of said front head, a retaining ring, a segmented annulus positioned adjacent to said retaining ring and engaging said flange, and means extending between said cylinder and said retaining ring for adjustably constricting said flange between said cylinder and said segmented annulus.

8. In a pile driving attachment for percussive tools, the combination with a cylinder and a hammer piston associated therewith, of a front head, a flange on said front head, an anvil block within said front head, guide members extending forwardly of said front head, a retaining ring free to pass over said flange, segmented means positioned adjacent to said retaining ring and engaging said flange, and a plurality of fastening means extending longitudinally from said cylinder to said retaining ring, said segmented means engaging said fastening means to inhibit rotary

motion of said segmented means with respect to said retaining ring.

9. In a pile driving attachment for percussive tools, the combination with a cylinder and a hammer piston associated therewith, of a front head, a flange on said front head, an anvil block within said front head, guide members extending forwardly of said front head, a retaining ring free to pass over said flange, said retaining ring being provided with an annular recess in its rearward face, a segmented annulus disposed within said annular recess, said segmented annulus urging said flange against said cylinder to inhibit rotary motion of said front head with respect to said cylinder.

10. In a pile driving attachment for percussive tools, the combination with a cylinder and a hammer piston associated therewith, of a front head, a flange on said front head, an anvil block within said front head, guide members extending forwardly of said front head, a retaining ring free to pass over said flange, said retaining ring being provided with an annular recess in its rearward face, a segmented annulus disposed within said annular recess and being held in assembled relation therein, said segmented annulus being provided with a grooved portion, fastening means extending between said cylinder and said retaining ring to hold said front head in assembled position, said fastening means engaging said grooved portion to inhibit rotary motion of said segmented annulus with respect to said cylinder.

11. In a pile driving attachment for percussive tools, the combination with a cylinder and a hammer piston associated therewith, of a front head, a flange on said front head, an anvil block within said front head, guide members extending forwardly of said front head, a retaining ring free to pass over said flange, said retaining ring being provided with an annular recess in its forward face, the base of said recess sloping inwardly and forwardly, a segmented frusto-conical annulus engaged in said recess and projecting radially inward from said retaining ring, said annulus abutting said front head about its periphery, and means for adjustably urging said annulus into forceful engagement with the periphery of said front head to inhibit rotary motion of said front head with respect to said annulus.

HERMAN J. SCHORLE.