Aug. 14, 1928. 1,681,134

J. F. RUTH

METAL WINDOW

Filed Sept. 28, 1927

Fig. 1.

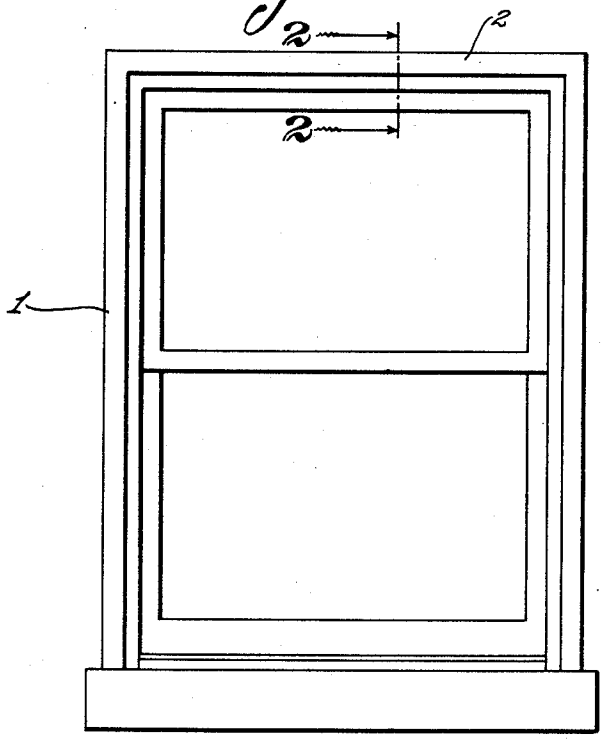

Fig. 2.

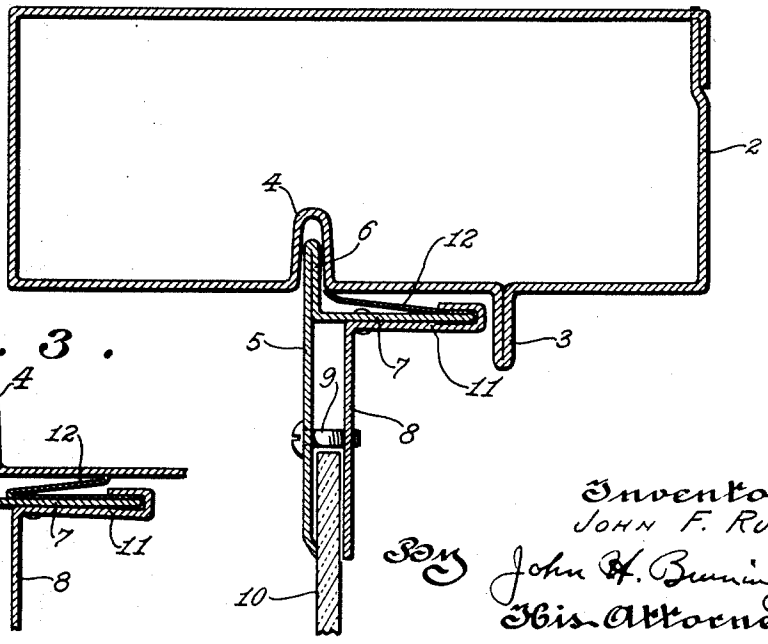

Fig. 3.

Inventor:
JOHN F. RUTH,
By John H. Bunnage
His Attorney.

Patented Aug. 14, 1928. 1,681,134

UNITED STATES PATENT OFFICE.

JOHN F. RUTH, OF ST. LOUIS, MISSOURI.

METAL WINDOW.

Application filed September 28, 1927. Serial No. 222,454.

This invention pertains to metal windows.

One of the objects of this invention is to provide an improved construction for a metal window which will provide an effective air seal between the upper sash and the head of the frame.

Another object is to provide an improved construction for the top sash rail which will provide increased strength and rigidity.

Another object is to provide a simple and effective construction in which a metal weatherstrip may be applied between the upper sash and the head of the frame.

Further objects will appear from the following description, taken in connection with the accompanying drawing, in which—

Figure 1 is an outside view of a window embodying this invention;

Figure 2 is an enlarged section on line 2—2 of Figure 1; and

Figure 3 is a section similar to Figure 2, but showing another embodiment of this invention.

Referring to the drawing, 1 designates the window frame, having a head 2. The head may be constructed of sheet metal formed with an outwardly extending flange or barrier 3 and an upwardly indented portion 4, forming a groove extending along the lintel.

The upper sash has a top rail formed of inner and outer members. The inner member comprises a vertical portion 5, providing an inner facing for the top rail. The metal sheet of which this member is formed is bent back upon itself so as to form an upstanding flange 6 adapted to enter the groove 4. The sheet is then bent outwardly to form an outwardly extending horizontal flange 7.

The outer member of the top rail has a vertical flange 8 secured to the portion 5 by screws 9 or other suitable fastenings and co-operating therewith to secure the pane of glass 10. Above the flange 8 the sheet is bent outwardly along the flange 7, as shown at 11, and its outer edge is crimped over the outer edge of the flange 7. When the window is raised, the flange 6 extends into the groove 4 and the flange 7 fits up close to the head behind the barrier 3. These parts then form a circuitous path which the air must follow in passing to the interior of the window through this portion thereof.

In order to more effectively seal this passage, a resilient strip of metal 12 is crimped over the edge of the flange 7 by the action of the crimped edge of the flange 11 and is formed to spring upwardly away from the flange 7, as shown. When the window is raised, this resilient strip comes into engagement with the head and exerts a yielding pressure thereagainst so as to seal the passage against drafts.

In the embodiment shown in Figure 3, the strip 12 extends inwardly along the flange 7 and is then bent back to engage the lintel at its outside edge. This renders the strip somewhat more flexible. It also provides that wind pressure from the outside will tend to press the strip more firmly into engagement with the lintel to provide a better seal.

It will be seen, therefore, that this invention provides a simple and economical construction for the joint between the top rail and the head and one to which a metal weatherstrip may be applied in a simple and inexpensive manner.

It will also be noted that the top rail structure provides, in effect, an angle section which makes the rail strong and rigid in all directions. By turning the edge of the flange 11 up over the raw edge of the flange 7, the latter edge is supported and rendered stiff and straight.

It is obvious that various changes may be made, within the scope of the appended claims, in the details of construction without departing from the spirit of this invention; it is, therefore, to be understood that this invention is not limited to the specific details shown and described.

Having thus described the invention, what is claimed is:

1. In a metal window having an upper sash and a frame head provided with a groove, a top rail for the sash formed with an upstanding flange adapted to enter the groove in the head and an outwardly extending air deflecting flange, and a resilient strip lying along said latter flange for coaction therewith and adapted to engage the head when the sash is raised.

2. In a metal window having an upper sash and a frame head provided with a groove, a top rail for the sash formed with an upstanding flange adapted to enter the groove in the head and an outwardly extending flange, and a resilient strip fixed to and springing up from said latter flange and adapted to engage the head when the sash is raised,

3. In a metal window having an upper sash and a frame head provided with a groove, a top rail for the sash formed of a sheet of metal bent back upon itself to form an upstanding flange adapted to enter the groove in the head and then outwardly to form a horizontal flange, and a second sheet of metal secured to said horizontal flange and extending inwardly and downwardly to co-operate with said first sheet to secure a pane of glass.

4. In a metal window having an upper sash and a frame head provided with a groove, a top rail for the sash formed of a sheet of metal bent back upon itself to form an upstanding flange adapted to enter the groove in the head and then outwardly to form a horizontal flange, a second sheet of metal secured to said horizontal flange and extending inwardly and downwardly to co-operate with said first sheet to secure a pane of glass, and a resilient strip secured to the outer edge of said horizontal flange and springing up therefrom to engage the head when the sash is raised.

5. In a metal window having an upper sash and a frame head provided with a groove, a top rail for the sash formed of a sheet of metal bent back upon itself to form an upstanding flange adapted to enter the groove in the head and then outwardly to form a horizontal flange, and a second sheet of metal crimped to the outer edge of said horizontal flange and extending inwardly and downwardly so as to co-operate with said first sheet to secure a pane of glass, and a resilient strip secured under the crimped edge of said second sheet and springing up from said horizontal flange to engage the head when the sash is raised.

6. In a metal window, a sash having a top rail formed of sheet metal bent to provide an L-shaped cross section for the rail, with one leg of said section projecting beyond the plane of the sash.

7. In a metal window, a sash having a top rail formed of sheet metal bent to provide adjacent vertical flanges adapted to secure a window pane, and adjacent horizontal flanges secured together.

8. In a metal window, a sash having a top rail formed of sheet metal bent to provide adjacent vertical flanges adapted to secure a window pane, and adjacent horizontal flanges, the edge of one of said horizontal flanges being turned over the other.

9. In a metal window, an upper sash having a top rail comprising a pair of metal sheets bent to angular form and nested one within the other so as to provide a pair of vertical flanges adapted to receive between them a pane of glass and a pair of horizontal flanges secured together.

10. In a metal window, an upper sash having a top rail comprising a pair of metal sheets bent to angular form and nested one within the other so as to provide a pair of vertical flanges adapted to receive between them a pane of glass and a pair of horizontal flanges crimped together at their outer edges.

In testimony whereof I affix my signature this 21st day of September, 1927.

JOHN F. RUTH.