Aug. 28, 1951 A. HAMMERSTEIN 2,565,917

DISPENSING DEVICE

Filed March 11, 1948

Fig. 1

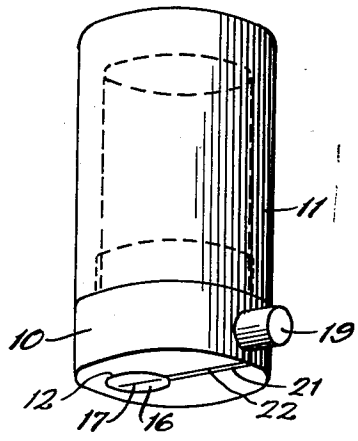

Fig. 2

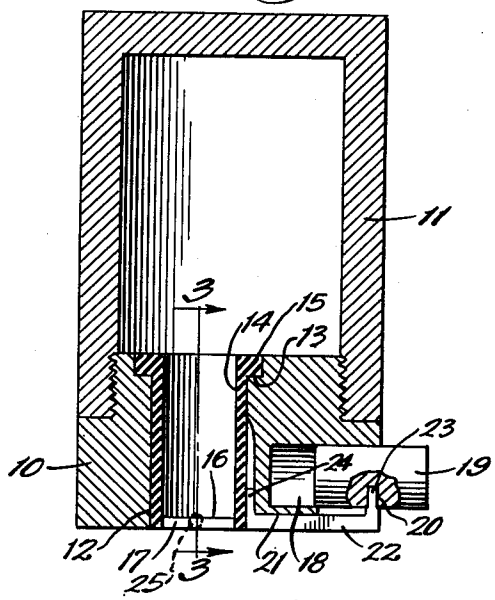

Fig. 3

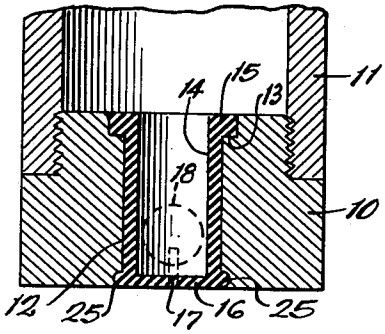

Fig. 4

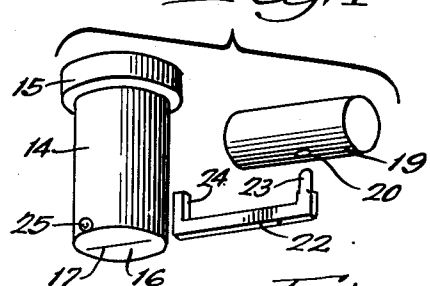

Fig. 6

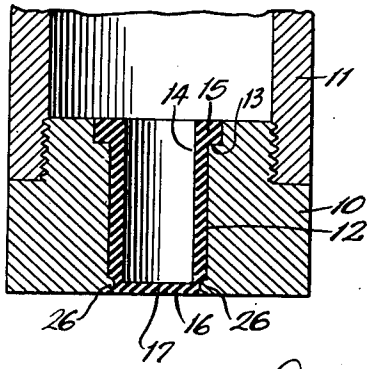

Fig. 5

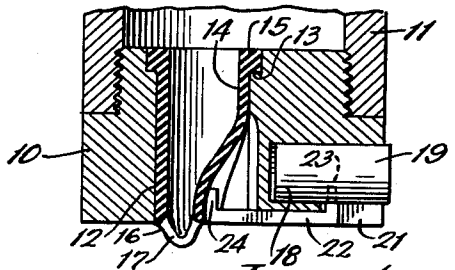

Inventor:
Arthur Hammerstein,

By Dawson, Owens, Booth and Spangenberg,
Attorneys.

Patented Aug. 28, 1951

2,565,917

UNITED STATES PATENT OFFICE

2,565,917

DISPENSING DEVICE

Arthur Hammerstein, Palatine, Ill.

Application March 11, 1948, Serial No. 14,249

7 Claims. (Cl. 222—490)

1

This invention relates to a dispensing device. The invention is particularly useful in the dispensing of salt, pepper, and similar granular material.

An object of the invention is to provide a simple structure highly effective in the dispensing of granular, etc. material. Yet another object is to provide a dispensing structure in which a resilient closure is employed, having a slit therein, and with improved means for opening the slit and, after the closure is released, for closing the slit. A still further object is to provide a closure device adapted to be used with containers, the closure device carrying a plunger and a resilient thimble, an actuating arm extending between the plunger and the thimble for pressing on the thimble to open a slit therein, means being also provided for pressing inwardly upon the thimble at a point substantially at right angles to the slit to close the same after the thimble is released. Other specific objects and advantages will appear as the specification proceeds.

The invention is illustrated, in preferred embodiments, by the accompanying drawing, in which—

Figure 1 is a perspective view of a dispensing device embodying my invention; Fig. 2, a vertical sectional view; Fig. 3, a broken vertical sectional view, the section being taken as indicated at line 3 of Fig. 2; Fig. 4, a perspective assembly view of the thimble plunger and actuating arm; Fig. 5, a broken view similar to Fig. 2, but showing the actuating arm in contact with the thimble to open the slit thereof; and Fig. 6, a broken vertical sectional view showing a modified form of the invention.

In the structure shown in Figs. 1 to 5, inclusive, I provide a rigid closure member 10. The closure 10 may be secured to any type of container. In the specific illustration given, the closure 10 threadedly engages a container 11. If desired, the container 11 may be provided with a closure-equipped opening at the end opposite the closure 10, so that salt, pepper, etc. may be introduced into the container from such opposite end. It will be understood that the container 11 may be of any suitable type or character.

The closure 10 is provided with a passage 12 extending therethrough and with an enlargement 13 at the inner side thereof. A resilient thimble 14, formed of rubber or other suitable material, extends through the passage 12 and is provided with a flange 15 received within the recess 13. The thimble 14 is provided with an outer wall

2

16, provided with a slit 17. The closure cap 10 is also provided with a guide passage 18 extending at right angles to the passage 12 and slideably receiving an actuating plunger 19. The plunger 19 is provided with an opening 20. Communicating between the passages 12 and 18 is a narrow slot 21 receiving the actuating arm 22.

The actuating arm 22 is provided at one end with a laterally-extending pin 23 received within the opening 20 in the plunger 19. The opposite end of the arm 22 is provided with a laterally-extending finger 24 adapted to engage the top portion of the side wall of the thimble 14 substantially in line with the slit 17.

In the operation of a thimble of the type described, it is found that, after a large number of operations, there is a tendency for the slit to remain slightly open after the actuating arm is released. In order to keep the slit sealed at all times, I provide the thimble 14 with knobs or projections 25 on opposite sides of the thimble and substantially at right angles to the slit 17.

Instead of equipping the thimble 14 with the knobs or projections 25, the rigid closure 10 itself may be provided with inwardly-extending projections or knobs 26 bearing against the wall of the thimble 14, as shown more clearly in the modification illustrated in Fig. 6.

Operation

In the operation of the structure, closure 10 may be assembled by pressing the thimble 14 into position, as shown in Fig. 2, and the plunger 19 and arm 22 may be assembled by pressing the pin 23 downwardly into the passage 20 to form a friction-tight fit therewith.

For opening the thimble slit, it is merely necessary to press the plunger 19 inwardly so as to bring the end of the arm and the finger 24 into engagement with the top portion of the thimble and in line with the slit 17. The slit 17 opens widely, as illustrated in Fig. 5, to permit the dispensing of the granular or other material. Upon the release of the plunger 19, the resilience of the thimble material causes it to assume the position shown in Figs. 2 and 3, and the slit 17 is effectively sealed by the pressure exerted inwardly as the result of the knobs or projections 25. Similarly, in the modification illustrated in Fig. 4, the inwardly-extending knobs 26 of the closure 10 press the thimble wall 16 inwardly to seal the slit.

The closure 10 may be employed with any type of container and is not limited to the specific form of container illustrated. It is a closure

complete in itself, and it may be attached to any desired container by threads or by any other suitable means.

As shown more clearly in Fig. 1, the outlet passage 12 of the closure cap 10 is eccentrically disposed with respect to the closure and preferably lies adjacent one side wall of the container 11, so that all of the material within the container may be effectively dispensed. Further, by locking the discharge passage 12 eccentrically in the end fitting or closure 10, I provide a much longer bearing surface for the plunger 19. The entire structure is extremely simple, easy to assemble or disassemble and is effective for long use in the dispensing of granular or other material, while excluding moisture to a very substantial degree from the interior of the container.

The projections 25 and 26 are preferably placed as close as possible to the bottom of the thimble. Further, I prefer that the space between walls 10 and 12 be about .0318 inch.

While in the foregoing description, I have shown specific structures in great detail for the purpose of illustrating single embodiment of the invention, it will be understood that such details of structure may be varied widely by those skilled in the art without departing from the spirit of my invention.

I claim:

1. In a dispensing device of the character set forth, a casing providing a chamber having a discharge passage at one end, a resilient thimble in said passage having an outer wall provided with a dispensing slit, means for exerting pressure inwardly upon said thimble at points generally at right angles to the slit to maintain the same closed, and a movable member mounted for engagement with said thimble in line with said slit to open the said slit.

2. In a dispensing device of the character set forth, a casing providing a chamber having a discharge passage at one end, a resilient thimble in said passage having an outer wall provided with a slit, said thimble being provided with projections substantially at right angles to the slit and adapted upon engagement with the walls of said discharge passage of the casing to exert pressure inwardly upon said thimble to close said slit, and a movable member mounted for engagement with said thimble in line with said slit to open the slit.

3. In a dispensing device of the character set forth, a casing providing a chamber having a discharge passage at one end and with projections extending inwardly from said passage, a resilient thimble in said passage having an outer closed wall provided with a slit, said slit extending substantially at right angles to a plane passing through said projections, said projections being adapted to exert pressure inwardly upon said thimble to maintain the slit thereof closed, and a movable member mounted for engagement with said thimble in line with said slit to open the same.

4. A dispensing cap adapted to close the end of a container, said cap comprising a closure body having a discharge passage extending therethrough, a resilient thimble in said passage and having an outer closed wall provided with a slit, said casing having also a guide passage extending from one side thereof toward said closure, a plunger slideably mounted in said guide passage, and an actuating arm engaging said thimble at one end in line with said slit and having the other end secured to said plunger, said thimble being provided with knobs generally aligned with said closed end of the thimble and engaging the walls of said discharge passage to exert inward pressure thereon and to close said slit.

5. A dispensing cap for a container, comprising a closure body having a discharge passage extending therethrough, a resilient thimble in said passage having a closed outer end provided with a slit, said casing having inwardly-extending projections in said discharge passage engaging said thimble to close said slit, said casing also having a guide passage extending from one side thereof toward said discharge passage, a plunger slideably mounted in said guide passage, and an actuating arm engaging said thimble at one end in line with said slit and having its other end secured to said plunger.

6. A dispensing cap for a container, comprising a closure body having a discharge passage extending therethrough, a resilient thimble in said passage having a closed outer end provided with a slit, said casing having inwardly-extending projections in said discharge passage engaging said thimble to close said slit, said casing also having a guide passage extending from one side thereof toward said discharge passage, a plunger slideably mounted in said guide passage, and an actuating arm engaging said thimble at one end in line with said slit and having its other end secured to said plunger, said other end of the actuating arm being equipped with a laterally-extending pin frictionally engaging a recess in said plunger.

7. In a dispensing container, a closure body having a discharge passage extending therethrough and a guide passage extending at right angles to said discharge passage, a resilient thimble within said discharge passage and having an outer closed wall provided with a slit, a plunger mounted in said guide passage for reciprocation therein, a slot extending between said guide passage and said discharge passage, and an actuating arm in said slot having one end connected to said plunger and the other end turned upwardly to provide a narrow vertical finger aligned with a vertical plane extending through said slit in said thimble.

ARTHUR HAMMERSTEIN.

REFERENCES CITED

The following references are of record in the file of this patent:

UNITED STATES PATENTS

Number	Name	Date
1,326,880	Rose	Dec. 30, 1919
1,542,584	Rose	June 16, 1925
2,456,504	Hammerstein	Dec. 14, 1948