June 16, 1953 W. C. WIEKING 2,642,000

INK DRYING EQUIPMENT FOR WEB PRINTING MACHINES

Filed Nov. 29, 1944 2 Sheets-Sheet 1

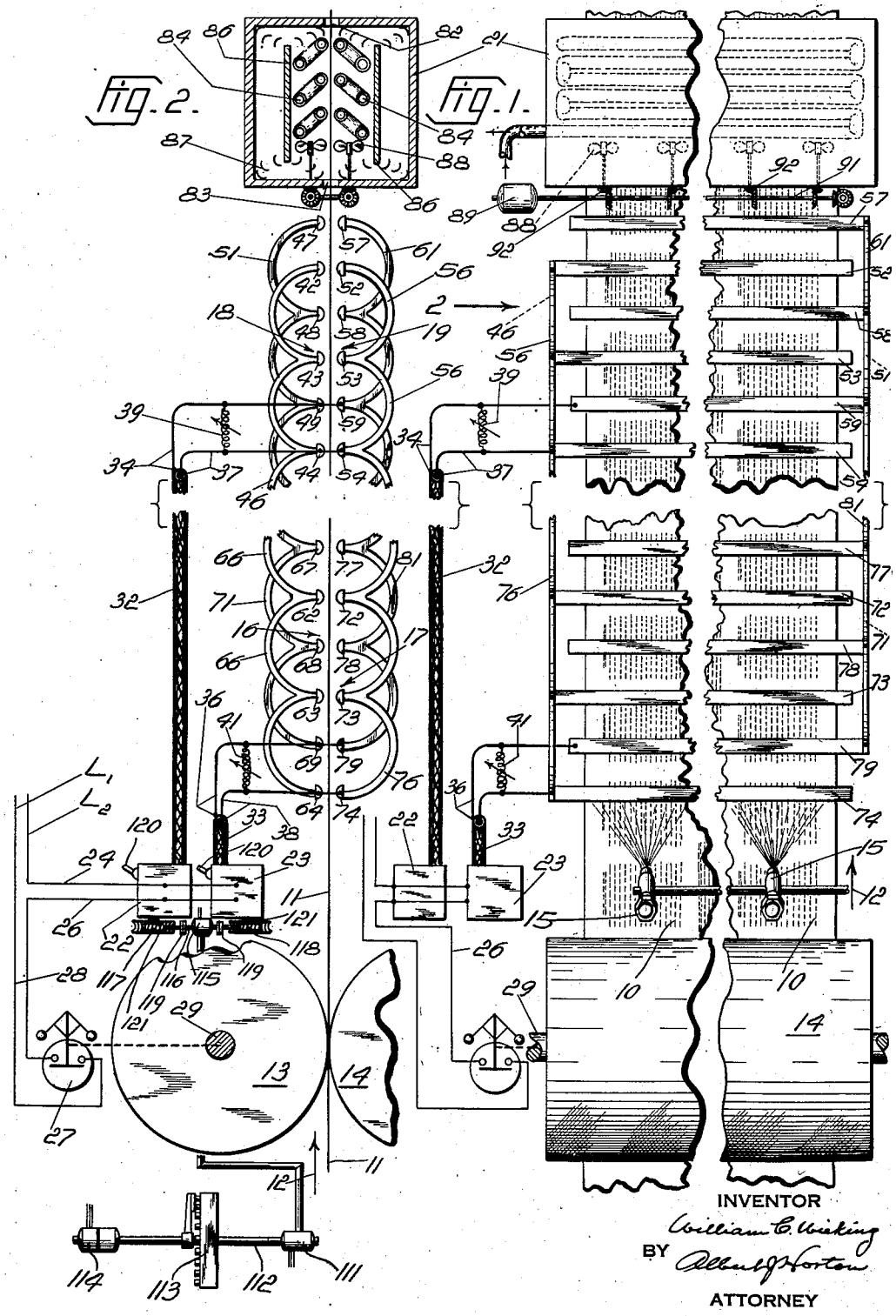

June 16, 1953 W. C. WIEKING 2,642,000

INK DRYING EQUIPMENT FOR WEB PRINTING MACHINES

Filed Nov. 29, 1944 2 Sheets-Sheet 2

Fig. 3.

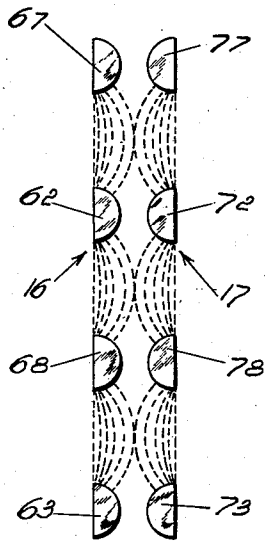

Fig. 4.

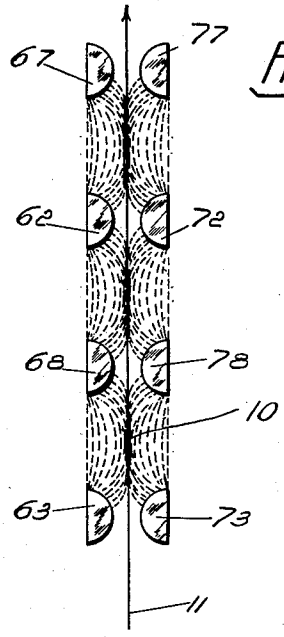

Fig. 5.

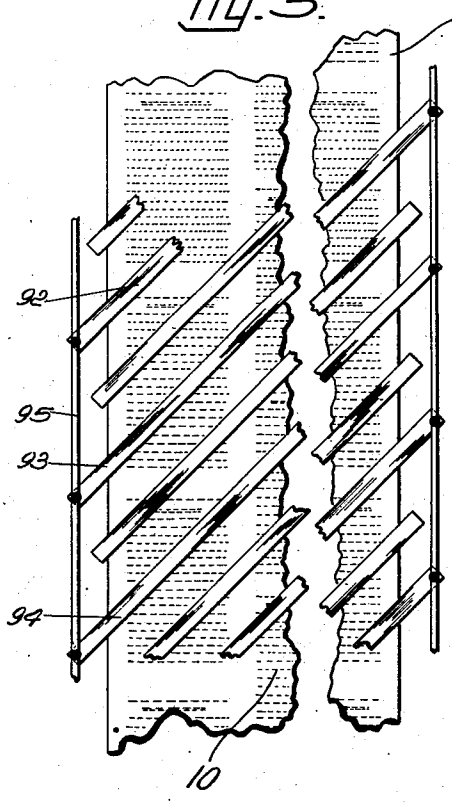

Fig. 6.

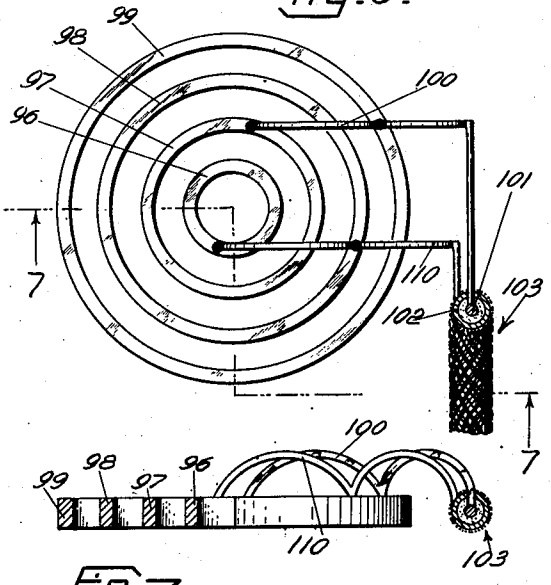

Fig. 7.

INVENTOR
William C. Wieking
BY
Albert G. Horton
ATTORNEY

Patented June 16, 1953 2,642,000

UNITED STATES PATENT OFFICE

2,642,000

INK DRYING EQUIPMENT FOR WEB PRINTING MACHINES

William C. Wieking, Woodhaven, N. Y., assignor to R. Hoe & Co., Inc., New York, N. Y., a corporation of New York

Application November 29, 1944, Serial No. 565,758

1 Claim. (Cl. 101—416)

1

This invention relates to a method and means for drying freshly printed sheets or webs and the ink deposited thereon and more particularly, to the use of equipment employing high frequency electric currents for this purpose.

Heaters heretofore used have usually been of the gas fired or electric resistance type, that heated not only the ink and the web but also the surrounding air. High frequency dielectric type heaters, heretofore used, have not been entirely satisfactory for heating ink deposited on thin, fast-moving, freshly printed sheets or webs and it is therefore one object of the invention to provide a new and improved high frequency dielectric heating device which is suitable for drying the ink on fast-moving sheets or webs.

Another object of the invention is to provide a new and improved high frequency dielectric heating device for use in drying thin sheets or webs and the ink printed thereon without heating the surrounding air.

Another object of the invention is to provide a new method and means for increasing the ability of a freshly printed sheet or web and ink printed thereon, to absorb heating energy from high frequency heating devices.

Another object of the invention is to provide a new and improved high frequency dielectric heating device in which the heating effect can be varied as the speed of the machine is varied.

Another object of the invention is to increase the heating effect produced in the ink and the sheet by the use of an atomizer for spraying the sheet with a material having a high power factor.

Still another object of the invention is to provide a plurality of separate dielectric heating devices that may operate at different voltages and frequencies to dry a sheet or web and ink printed thereon.

It is also an object of the invention to provide a means whereby electrodes of a high frequency electric power source can be placed close to a freshly printed sheet or web without causing corona or arcing between the electrodes.

In accordance with one form of the invention a freshly printed surface in the form of a long continuous sheet is passed between a plurality of paired electrodes located close to the sheet. The paired electrodes are connected together and alternate pairs are energized from a source of high frequency electric energy.

For a more complete understanding of the invention reference should be had to the accompaning drawings in which;

Figure 1 is a diagrammatic front view showing a means for drying a freshly printed sheet and the ink deposited thereon in accordance with one form of the invention;

Figure 2 is a side view of the major portion of

2

the apparatus shown in Figure 1, looking in the direction of the arrow 2, and including some features not shown in Figure 1.

Figure 3 is an enlargement of a portion of Figure 2 showing the electric field surrounding the electrodes when a sheet is not present;

Figure 4 is an enlargement similar to Figure 3 showing the electric field when a freshly printed sheet is present;

Figure 5 shows a modified form of the invention in which the electrodes are positioned diagonally with respect to the direction of sheet travel;

Figure 6 is a further modification of the invention showing ring type electrodes for heating particular portions of a printed sheet.

Figure 7 is a view taken along the broken line 7—7 of Figure 6.

Referring to the embodiment of the invention illustrated in Figures 1 to 4, numeral 11 indicates a sheet moving from a source of supply (not shown) in the direction of an arrow 12. As the sheet 11 passes between a pair of cooperating printing cylinders 13 and 14, one or both sides of the sheet are printed with fresh web ink 10 in a manner well known in the art. From the printing couple the freshly printed sheet 11 is led past one or more spray guns 15, of any well known type, and which may be located on either or both sides of the sheet. The sheet is then led between lower rows 16 and 17, and then between the upper rows 18 and 19 of semi-circular rod-like electrodes or terminals located in planes close to and parallel to the sheet 11. As best shown in Figures 1 and 2, the axes of the rod-like electrodes or terminals are perpendicular to the direction of sheet travel, and the electrodes of opposite polarity are spaced much farther apart lengthwise of the sheet 11 than are the electrodes of same polarity which are adjacently located on opposite sides of the sheet. After passing between the rows of electrodes, the sheet is led through a refrigerated cooling box 21 to another portion of the printing machine.

Figures 1 and 2 show a plurality, in this case two, of any well known type of high frequency oscillators 22 and 23. The oscillators are supplied with electrical energy from power lines L1 and L2. A conductor 24 connects the oscillators 22 and 23 to the line L2, and a conductor 26 connects all of the oscillators to a centrifugal switch 27. The switch 27 is connected to the line L1 by a conductor 28. The centrifugal switch may be operated from any convenient portion of the printing machine, as for example, from a shaft 29 of the printing cylinder 13. When the printing cylinders 13 and 14 are rotating at printing speed, the switch 27 will close to energize the oscillators 22 and 23, but the instant the speed of the printing machine drops below a predetermined point, the switch 27 will

open to deenergize the oscillators by disconnecting them from the line L1.

From each of the two oscillators 22 and 23, a separate coaxial or concentric cable 32 and 33, having external conductors 34 and 36 and central conductors 37 and 38, respectively, extends in the case of the oscillator 22 to the group of electrodes in upper rows 18 and 19, and in the case of oscillator 23 to the group of electrodes in lower rows 16 and 17. Variable inductances 39 and 41 are connected between the central and external conductors of the cables 32 and 33 respectively, at points close to where the conductors are attached to the rows of electrodes.

Alternate electrodes of each row are joined at respectively opposite ends by connectors having a plurality of arcuate loops. Specifically a pluraiity of first upper electrodes 42, 43, and 44 are joined at one end by a connector 46, which is attached to the central conductor 37 of the cables 32, and a plurality of second upper electrodes 47, 48, and 49 are joined at the opposite end by a connector 51 which is attached to the external conductor 34 of the cable 32. A plurality of third upper electrodes 52, 53 and 54 are joined by a connector 56 which is attached to the conductor 37, and a plurality of third upper electrodes 57, 58 and 59 are joined by a connector 61 attached to the conductor 34. Similarly a plurality of first lower electrodes 62, 63, and 64 are joined at one end by a connector 66 which is attached to the central conductor 38 of the cable 33, and a plurality of second lower electrodes 67, 68, 69 are joined at the opposite end by a connector 71 which is attached to the external conductor 36 of the cable 33. A plurality of third lower electrodes 72, 73, and 74 are joined by a connector 76 which is attached to the conductor 38, and fourth lower electrodes 77, 78, and 79 are joined by a connector 81 which is attached to the conductor 36. Thus alternate pairs of electrodes are energized at the same electrical potential. Also electrodes adjacently located on opposite sides of the sheet are energized from the same conductor and hereinafter these electrodes will be referred to as "paired electrodes." For example, the paired electrodes 42 and 52 are at the same electrical potential, since they are both connected by way of connectors 46 and 56 to the conductors 37. Likewise electrodes 43 and 53 are paired electrodes. The electrodes 42, 52, 43, 53, 44, and 54 are all energized from the central conductor 37 of the cable 32, while the electrodes 47, 57, 48, 58, 49, and 59 are energized from the external conductor 34 of the cable 32. Thus, the electrodes that are all connected to the same conductor may be considered a set. Since electrodes located on opposite sides of the sheet are energized at the same electrical potential, no electrical field will exist therebetween, and thus they can be located close to the sheet and as close to one another as desirable without the formation of corona or arcing. Also the paired electrodes located adjacent one another lengthwise of the sheet are energized at opposite polarity, for example, the paired electrodes 42—52 and 47—57 are energized at opposite polarity, but since they are spaced at a distance lengthwise of the web, corona or arcing will not form. The drawings show only a few electrodes for each of the upper and lower groups. However, it will be understood that a greater or lesser number of electrodes may be employed.

The refrigerated cooling box 21, may be of any suitable form, but as shown in the drawings comprises a casing with openings 82 and 83 for the freshly printed and heated sheet 11 to pass through. A plurality of refrigerated pipes 84, a baffle 86, and a number of deflectors 87 are located on both sides of the sheet. Circulating fans 88 are provided to force air, cooled by the pipes 84, against both sides of the printed sheet 11. The fans 88 may be operated from a motor 89 through drive shafts 91 and cooperating bevel gears 92. Preferably the air will be circulated from the fan past the pipes 84 so that the coolest portion of the air contacts the sheet just before it leaves the refrigerated box.

Figures 3 and 4 show an approximate plot of the electric field which exists between adjacent paired electrodes. Figure 3 shows the field for the two sets of electrified terminals or electrodes 16 and 17 at a time when a freshly printed sheet is not present therebetween. This condition, while seldom if ever met in practice, when considered in connection with the condition illustrated in Figure 4, indicates how the ink and a freshly printed sheet is dried by means of a high frequency electric field. In Figure 3 the field between the electrodes is undistorted while in Figure 4 the electric field is distorted due to the presence of the ink 10 on the freshly printed web or sheet 11. It will be understood that the wet ink and the sheet have higher power factors than the air, and therefore provides a better path for the heating energy passing between the electrodes. As one means for insuring that the freshly printed wet ink will have a power factor much greater than the surrounding air and the sheet 11, it is preferable to use an ink containing a material having a high power factor as for example a soluble resin although other materials may be used.

It will also be understood that some portions of a freshly printed sheet receive more wet ink than other portions, and therefore the power factor of all portions of an average freshly printed sheet will not be the same. Consideration of many printed pages will show that a horizontal line drawn through a line of printed matter, traverses more printed area than does a vertical line through the same page. Therefore the power factor of a freshly printed page with wet ink as measured horizontally will generally be greater than the power factor of the same page as measured from top to bottom.

Since the electrodes shown in Figures 1 and 2 are perpendicular to the direction of sheet movement, the electric lines of force existing between these electrodes will be parallel to the direction of sheet movement and thus will produce the greatest amount of heating in a printed line which runs parallel to the direction of surface movement. For this reason, the form of the invention shown in Figures 1 and 2 is most advantageously used when printing a tabloid type of newspaper, magazines and other products where the printed lines are collinear with the direction of sheet movement.

The oscillators 22 and 23 may be of any standard design, well known in the electrical art, and preferably will be capable of generating electrical energy having a frequency within the range used for high frequency dielectric heating. While the illustrated embodiment of the invention shows two separate oscillators, it will be understood that, under some circumstances, satisfactory results may be obtained by the use of one master oscillator having a plurality of pick-up coils cou-

pled to a single master tank circuit. Preferably the oscillator 23 for energizing the lower sets of electrodes 16 and 17 will be operated at a lower voltage than the oscillator 22 for energizing the upper rows of electrodes 18 and 19. As the printed sheet is heated by the lower set of electrodes it becomes partly dried and its power factor changes. Therefore a higher voltage at a suitable frequency, may advantageously be used for heating the partly dried sheet. It will be understood that more than two oscillators and more than two sets of paired terminals may be used if desired.

A means for regulating the energy produced by oscillators 22 and 23, as the speed of the printing machine varies, is included and comprises a Selsyn or similar transmitter 111 driven by a shaft 112 of rheostat 113 controlled by a pilot motor 114. It will be understood that the rheostat 113 and pilot motor 114 are used to regulate the speed of the printing machine and thus the rate at which the web 11 is printed. A Selsyn or similar receiver 115, electrically connected to the transmitter 111 in a well known manner, drives a shaft 116 that by means of coupling 119, worm gears 117 and 118, and shafts 121 regulate the energy produced by the oscillators 22 and 23. Increasing the speed of the printing machine will thus increase the energy produced by the oscillators and thus will increase the amount of heat generated in the freshly printed ink 10 and web 11. The couplings 119 positioned between the receiver 115 and the worms 117, and 118 permit the receiver 115 to control either one or both of the shafts 121 and thus to control the energy produced by either one or both of the oscillators. Toggle switches 120 on each of the oscillators 22 and 23 may be used to shut off the primary current, feeding from the lines L1 and L2 to the oscillators. It will be understood that a slow moving sheet requires less electrical energy to dry the ink than does a fast moving one. By the means disclosed it is possible to increase or decrease the amount of heating applied to the ink 10 and the sheet 11 as the speed of printing is increased or decreased.

A modified form of the invention, shown in Figure 5, is similar to the hereinbefore described device except that the semicircular rod type electrodes, for example electrodes 92, 93, and 94, which are located in planes close to the sheet and are connected by a connector 95, have their axes at an angle of approximately forty-five degrees with the direction of sheet movement. This produces an electrical field which extends at an angle of forty-five (45°) degrees with the direction of movement of the sheet 11 and is most advantageously employed for drying the ink on a freshly printed sheet which has printed lines running perpendicular to the direction of sheet movement. In this case the electric lines of force have components which are parallel to the printed lines. The type of heater shown in Figure 5, is also useful for drying freshly printed ink on sheets containing illustration, etc., where no particular printed pattern predominates. In order that the greatest amount of heat may be generated in the ink 10 and the sheet 11, it is desirable to increase the power factor of the ink and the sheet. To this end there has been provided a plurality of spray guns 15 for spraying the sheet 11 with a solution having a high power factor as for example a quick drying volatile solution of a colorless resin, although other materials may be used.

The embodiment of the invention shown in Figures 6 and 7 comprises a plurality of concentrically placed ring type electrodes 96, 97, 98 and 99, alternately joined by connectors 100 and 110, and energized from an internal conductor 101 and an external conductor 102 of a concentric cable 103 respectively. This device is primarily adapted for drying particularly wet portions of a printed sheet and may be of a large or small diameter as required. The electrodes 96 and 98 are joined by the connector 110 which is attached to the conductor 102, and the electrodes 97 and 99 are joined by the connector 100 which is attached to conductor 101, while the cable 103 may be energized from a high frequency oscillator not shown.

The term "sheet" as used herein includes a long sheet or web of paper such as is printed by web fed printing machines.

It will be understood that the invention may be embodied in other specific forms without departing from the spirit or essential attributes thereof, and it is therefore desired that the present embodiments be considered in all respects as illustrative and not restrictive, and it will be further understood that each and every novel feature and combination present in or possessed by the mechanism herein disclosed forms a part of the invention included in this application.

What I claim is:

In an ink drying equipment for a printing machine, a source of high frequency electrical energy having two external conductors, two sets of closely spaced pairs of electrodes mounted in parallelism and with one electrode on each side of a path through which sheets are led from printing cylinders of the machine, the said electrodes being mounted diagonally with respect to the said path, the two electrodes of each pair being connected together and the electrode pairs of each set being electrically connected together, the pairs of electrodes alternating in sequence so that pairs of electrodes of each set are interposed between pairs of electrodes of the other set, and a connection from one of the said conductors to one set of electrode pairs and a connection from the other conductor to the second set of electrode pairs.

WILLIAM C. WIEKING.

References Cited in the file of this patent

UNITED STATES PATENTS

Number	Name	Date
1,023,316	Hurwitz	Apr. 16, 1912
1,503,224	Blaine	July 29, 1924
1,624,029	Whitcomb	Apr. 22, 1927
1,646,498	Seede	Oct. 25, 1927
1,668,154	Kelly	May 1, 1928
1,900,573	McArthur	Mar. 7, 1933
1,949,873	Nordquist	Mar. 6, 1934
2,109,774	Hooft	Mar. 1, 1938
2,157,388	MacArthur	May 9, 1939
2,196,611	Schneider	Apr. 9, 1940
2,212,522	Hart, Jr., et al.	Aug. 27, 1940
2,226,871	Nicholas	Dec. 31, 1940
2,228,136	Hart	Jan. 7, 1941
2,231,457	Stephen	Feb. 11, 1941
2,261,212	Beregh	Nov. 4, 1941
2,268,986	Hess et al.	Jan. 6, 1942
2,288,269	Crandell	June 30, 1942
2,317,370	Geese	Apr. 27, 1943
2,319,174	Wilson	May 11, 1943
2,320,474	Ross	June 1, 1943
2,397,615	Mittelmann	Apr. 2, 1946