M. W. MEYER.

DEVICE FOR BRANDING.

APPLICATION FILED MAY 24, 1912.

1,068,803.

Patented July 29, 1913.

Fig. 1.

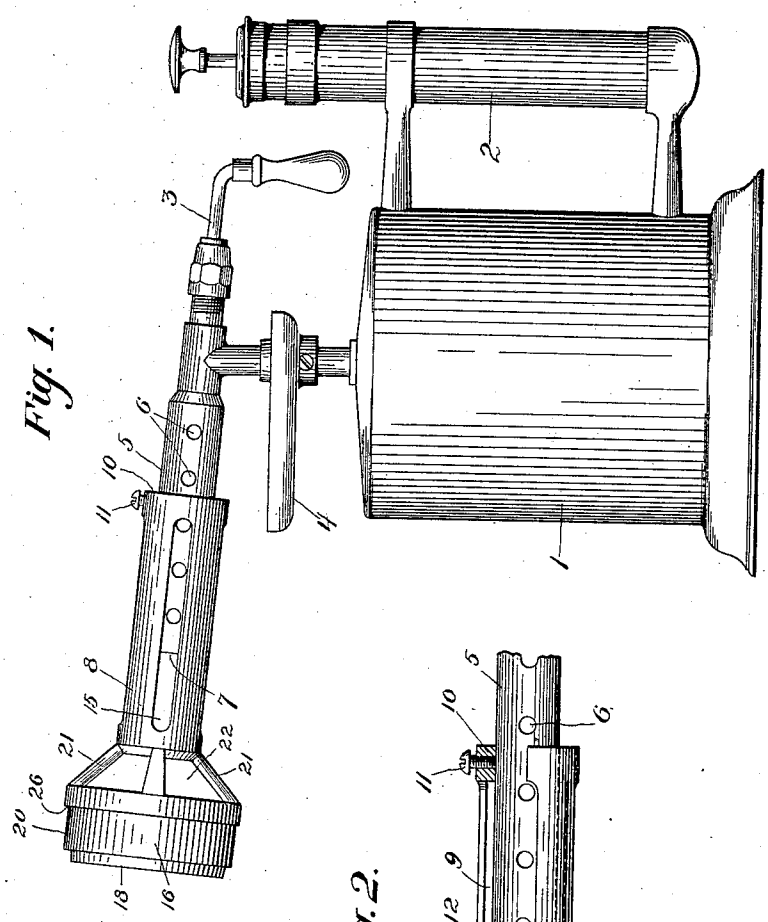

Fig. 2.

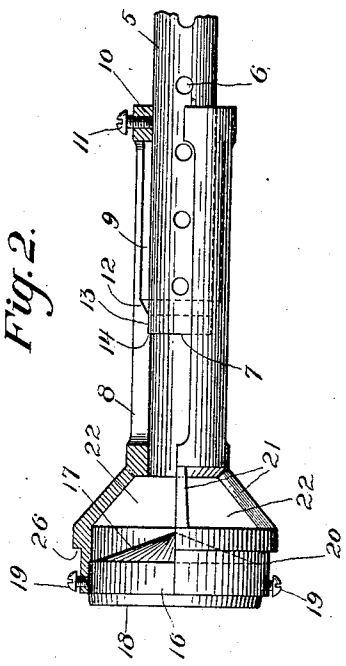

Fig. 3.

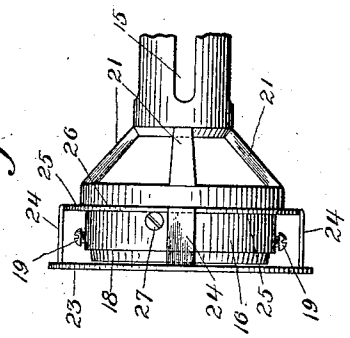

Witnesses:

John Darby

Roser Merle

M. W. Meyer Inventor

By his Attorney John D Morgan

COLUMBIA PHONOGRAPH CO., WASHINGTON, D. C.

UNITED STATES PATENT OFFICE.

MONROE W. MEYER, OF BLOOMFIELD, NEW JERSEY, ASSIGNOR TO MONROE W. MEYER, DAVID T. JENSEN, AND AUGUST W. TREU, COMPOSING THE COPARTNERSHIP OF MEYER, JENSEN AND COMPANY.

DEVICE FOR BRANDING.

1,068,803. Specification of Letters Patent. Patented July 29, 1913.

Application filed May 24, 1912. Serial No. 699,473.

To all whom it may concern:

Be it known that I, MONROE W. MEYER, a citizen of the United States, residing at Bloomfield, in the county of Essex and State of New Jersey, have invented new and useful Improvements in Devices for Branding, of which the following is a specification.

The invention relates to devices for branding meats, carcasses, animals, etc., and more especially to such devices which are manually portable and are self heating.

The various objects, advantages and features of the invention will in part be stated hereinafter, and will in part be obvious to those skilled in the art herefrom or from practice with and observation of the invention.

The various means and instrumentalities through which the foregoing are attained are pointed out in the appended claims.

The invention consists in the novel parts, constructions, combinations and improvements herein shown and described.

The accompanying drawings, referred to herein, and forming a part hereof, illustrate one embodiment of the invention, the same serving in connection with the description herein to explain the principles of the invention.

Of the drawings: Figure 1 is an elevation of an embodiment of the invention; Fig. 2 is a fragmentary detail on an enlarged scale with parts in section, and illustrating especially the air circulating space between the mixing tube and the flame directing tube, and showing the construction of the branding die; and Fig. 3 is a fragmentary elevation on an enlarged scale of the branding die and contiguous part, and the guard.

Referring to the particular embodiment of the invention illustrated by way of example in the accompanying drawings, a branding device is shown having a torch 1, of any suitable and approved form. The form shown is such as is commonly employed in the burning of a gasified or vaporized hydro-carbon fluid.

2 indicates generally a pump for putting pressure upon the hydro-carbon fluid to vaporize it and project it into the torch burner. Means for controlling the supply of vaporized fuel are provided, shown as a valve having a controlling or a regulating handle 3. A suitable drip pan 4 may also be provided.

A tube 5 is provided having a plurality of air intakes 6. The gasified or vaporized fuel is projected through the tube 5, the air being drawn in through the intakes 6 and mixed with the vapor within the tube 5 to give the proper burning mixture, the mixture being projected from the mouth 7 of the mixing tube 5. The mixture is ignited and burned outside the mouth 7 of the mixing tube 5.

A flame directing tube 8 closely encircles the mixing tube 5 and directs the flame on to the rear of the branding die to keep the die continuously heated. An air circulating space is provided between the two tubes, that is, between the mixing tube 5 and the flame directing tube 8, to keep the mixing tube 5 at a safe temperature in order to prevent combustion within said mixing tube, and thereby keeping the tube and torch safely cool. In the embodied form, said air circulating space is indicated by reference numeral 9 and extends around about the mixing tube, and is formed in the present instance by having a portion of the bore of the flame directing tube 8 of larger diameter, as by cutting away the inner face of said flame directing tube, as will be clear from Fig. 2. Means are also provided for positioning and centering the flame directing tube about the mixing tube, and for fastening the two tubes together, and for determining the distance that the encircling flame directing tube 8 passes over the mixing tube 5. In the embodied form, a bearing point or collar 10 is provided at the inner end of the flame directing tube 8, and a clamping screw 11 is shown for fastening the two tubes together. At the forward end of the air circulating space 9 is a beveled surface 12 leading to a cylindrical portion 13 of smaller bore, said cylindrical portion 13 forming a second bearing point. Adjacent thereto is a shoulder 14 against which the inner end 7 of the mixing tube 5 abuts. It will thus be seen that the relation of the two tubes to each other is definitely determined, and that the flame directing tube 8 will slide easily into position over the mixing tube 5 and will also be quickly centered by the beveled surface 12, and positioned by the shoulder 14.

It will be noted also that some of the intake apertures 6 are exterior to the flame directing tube 8. Openings 15 are provided through the flame directing tube 8 furnishing communication between the air circulating space 9 and the outer air. In the embodied form these openings are shown as elongated slots extending longitudinally of the flame directing tube 8 and beyond the end of the mixing tube 5.

The branding die 16 is of solid metal, preferably of circular form and has its back surface 17, that is the surface opposite its character bearing or branding surface 18 of coniform or other equivalent form, whereby the flame is distributed or caused to act uniformly over the entire back surface 17, and thus keep the die of a practically uniform temperature throughout. The branding die 16 is held in position by suitable devices such as clamping screws 19. Usually the die will be of larger size or diameter than the flame directing tube 8 and the die holding rim or member 20 will also be larger than the tube 8. In such case the member 20 is connected to the tube 8 by an outwardly expanding portion 21 provided with sidewise opening flame vents 22. The sidewise opening flame vents permit free exit for the hot and burning gases while deflecting them from the articles to be branded and at the same time preventing a flare back toward the torch and the operator. I have also arranged the slots or openings 15 in line with the members 21, thereby increasing the cooling effect at this point of great conductivity.

Means are provided whereby the impression of the die is regulated in branding upon resilient surfaces, such as meats and carcasses. The embodied form thereof comprises a ring or frame 23 arranged around the die and just sufficiently in advance of the imprinting surface 18 to permit the surface inclosed by said ring or frame 23 to rise up into contact with the branding die within the frame or ring 23, the ring 23, at the same time preventing the die burning too deeply into the flesh. The ring or frame 23 is carried on standards 24 connected to a ring or frame 25 fitting against a shoulder 26 on the rim or member 20. Said ring or frame 25 is held in place by suitable means such as screws 27, the frame 25 abutting against the head of said screw.

It will thus be seen that the branding implement proper is easily applied to, positioned and fixed upon a torch of ordinary construction, and centered relative thereto; that the torch is kept cool and in safe condition by the cooling influence of the air circulation; that free exit is given to the hot and burning gases, and that the branding die is kept constantly and uniformly heated; that the entire device is easily carried from place to place for use in branding; and that other objects and advantages are realized which will be obvious herefrom or will be clearly understood from practice with the invention.

It will be understood that the invention is not limited to the construction shown and described, but that these may be varied and departed from within the scope of the accompanying claims.

What I do claim as my invention and desire to secure by Letters Patent, is:

1. A branding device including in combination a torch having a mixing tube provided with air inlets whereby the air and an inflammable vapor from the torch are mixed within said tube and burned outside the mouth of said tube, a flame directing tube encircling said mixing tube and projecting beyond the end of said mixing tube and bearing against said mixing tube at separated points respectively near an end of each of said tubes, an air circulating space between and along said tubes between said bearing points and communications therefrom to the outer air, and a branding die carried by said flame directing tube at its other end in position to be heated by said flame.

2. A branding device including in combination a torch having a mixing tube provided with air inlets whereby the air and an inflammable vapor from the torch are mixed within said tube and burned outside the mouth of said tube, a flame directing tube encircling said mixing tube and projecting beyond the end of said mixing tube and bearing against said mixing tube at separated points, respectively, near an end of each of said tubes, said flame directing tube having openings therethrough, an air circulating space between and along said tubes between said bearing points and communications therefrom to the outer air, and a branding die carried by said flame directing tube at its other end in position to be heated by said flame.

3. A branding device including in combination a torch having a mixing tube provided with air inlets whereby the air and an inflammable vapor from the torch are mixed within said tube and burned outside the mouth of said tube, a flame directing tube encircling said mixing tube and projecting beyond the end of said mixing tube and bearing against said mixing tube at separated points respectively near an end of each of said tubes, an air circulating space between and along said tubes between said bearing points and communications therefrom to the outer air, a branding die carried by said flame directing tube at its other end in position to be heated by said flame, and openings in said flame directing tube just back of said die.

4. A branding device including in combi-

nation a torch having a mixing tube provided with air inlets whereby the air and an inflammable vapor from the torch are mixed within said tube and burned outside the mouth of said tube, a flame directing tube encircling said mixing tube and projecting beyond the end of said mixing tube and bearing against said mixing tube at separated points, respectively near an end of each of said tubes, an air circulating space between and along said tubes between said bearing points and communications therefrom to the outer air, a branding die carried by said flame directing tube at its other end in position to be heated by said flame, and an outwardly expanding portion at the end of said flame directing tube to receive the die, said outwardly expanding portion having openings therein just back of the die.

5. A branding device including in combination a torch having a mixing tube provided with air inlets whereby the air and an inflammable vapor from the torch are mixed within said tube and burned outside the mouth of said tube, a flame directing tube encircling said mixing tube and projecting beyond the end of said mixing tube and bearing against said mixing tube at separated points, respectively, near an end of each of said tubes, an air circulating space between and along said tubes between said bearing points and communications therefrom to the outer air, means for determining the distance the flame directing tube passes over the mixing tube, and a branding die carried by said flame directing tube at its other end in position to be heated by said flame.

6. A branding device including in combination a torch having a mixing tube provided with air inlets whereby the air and an inflammable vapor from the torch are mixed within said tube and burned outside the mouth of said tube, a flame directing tube encircling said mixing tube and projecting beyond the end of said mixing tube and bearing against said mixing tube at separated points, respectively, near an end of each of said tubes, said flame directing tube having openings through the sides thereof, an air circulating space between and along said tubes between said bearing points, said space communicating with said openings in the flame directing tube, means for determining the distance the flame directing tube passes over the mixing tube, and a branding die carried by said flame directing tube at its other end in position to be heated by said flame.

7. A branding device including in combination a torch having a mixing tube conveying the unignited vapor and having openings therein for taking in air and mixing it with said vapor, a separable flame directing tube closely encircling and bearing upon said mixing tube but with an air circulating space therebetween and having openings from said air space between said tubes to the outer air and a branding die in position to have the flame formed at the open end of said mixing tube directed thereagainst by said flame directing tube.

8. An attachment to a hydro-carbon vapor burning torch having a mixing tube with a plurality of openings arranged therealong, said attachment comprising a flame directing tube, one end of which is adapted to slip over said mixing tube for a predetermined distance so as to include a portion only of the openings in said mixing tube, said flame directing tube having bearing points formed on the inside to form separated close fitting bearings on said mixing tube near an end of each of said respective tubes, said tube having an air chamber formed therewithin between said bearing points, said chamber having openings therefrom to the outer air, an outwardly expanded portion at the other end of, and integral with, said flame directing tube and having openings in the sides thereof, and means in the end of said outwardly expending portion for holding a removable die of larger size than said flame directing tube.

9. A branding device including in combination a torch having a mixing tube provided with air intake openings, a flame directing tube with one end encircling said mixing tube but leaving a plurality of said air intake openings uncovered by said encircling tube, said tubes having an air circulating space therebetween, means for limiting the distance the mixing tube extends within the encircling tube, a branding die at the other end of said encircling tube, and sidewise opening flame vents near said branding die.

10. A branding device including in combination a torch having a mixing tube provided with air intake openings, a flame directing tube with one end encircling said mixing tube but leaving a plurality of said air intake openings uncovered by said encircling tube, said tubes having an air circulating space therebetween and openings through said encircling tube from said air circulating space to the outer air, means for limiting the distance the mixing tube extends within the encircling tube, a branding die at the other end of said encircling tube, and sidewise opening flame vents near said branding die.

11. A branding device including in combination a torch having a mixing tube provided with air intake openings, a flame directing tube with one end encircling said mixing tube but leaving a plurality of said intake openings uncovered by said encircling tube, said tubes having an air circulating

space therebetween, means for limiting the distance the mixing tube extends within the encircling tube, means for fastening said tubes together, a branding die at the other end of said encircling tube, and sidewise opening flame vents near said branding die.

12. A branding device including in combination a torch having a mixing tube provided with air intake openings, a flame directing tube with one end encircling said mixing tube but leaving a plurality of said air intake openings uncovered by said encircling tube, said tubes having an air circulating space therebetween and openings through said encircling tube from said air circulating space to the outer air, means for limiting the distance the mixing tube extends within the encircling tube, a branding die at the other end of said encircling tube, said branding die being of solid metal and having its inner surface coniform with its apex substantially concentric with said flame directing tube, and sidewise opening flame vents near said branding die.

In testimony whereof, I have signed my name to this specification, in the presence of two subscribing witnesses.

MONROE W. MEYER.

Witnesses:
JOHN D. MORGAN,
ROSE MENK.

Copies of this patent may be obtained for five cents each, by addressing the "Commissioner of Patents, Washington, D. C."