H. H. JACOBUS.

MEANS FOR CUTTING AND PRINTING LABELS.

APPLICATION FILED APR. 7, 1914.

1,159,037.

Patented Nov. 2, 1915.

4 SHEETS—SHEET 1.

FIG. 1

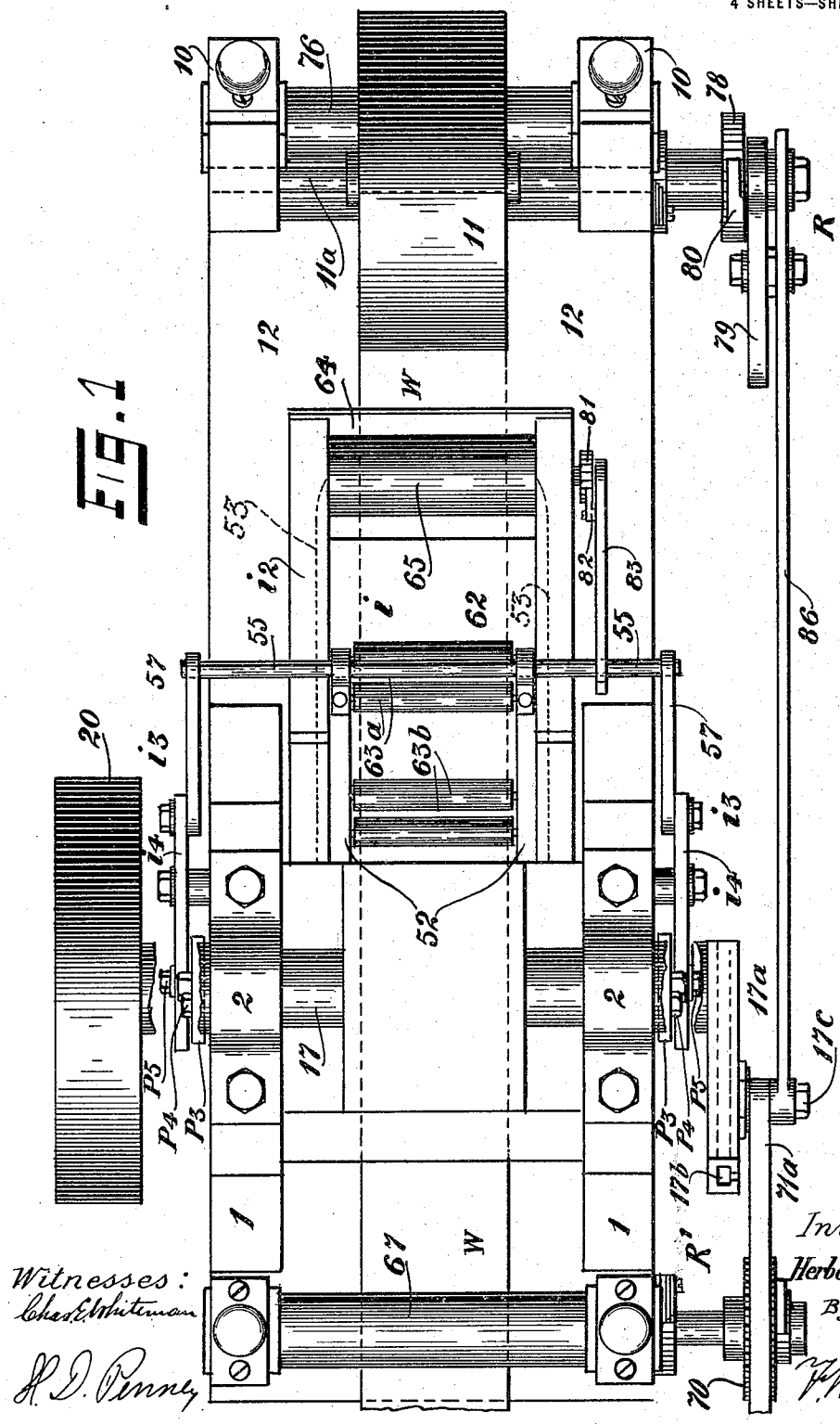

Witnesses:

Chas. L. Whiteman

H. D. Penney

Inventor:

Herbert H. Jacobus

By his Att'y.

W. A. Richards

COLUMBIA PLANOGRAPH CO., WASHINGTON, D. C.

H. H. JACOBUS.

MEANS FOR CUTTING AND PRINTING LABELS.

APPLICATION FILED APR. 7, 1914.

1,159,037.

Patented Nov. 2, 1915.

4 SHEETS—SHEET 2.

FIG. 2

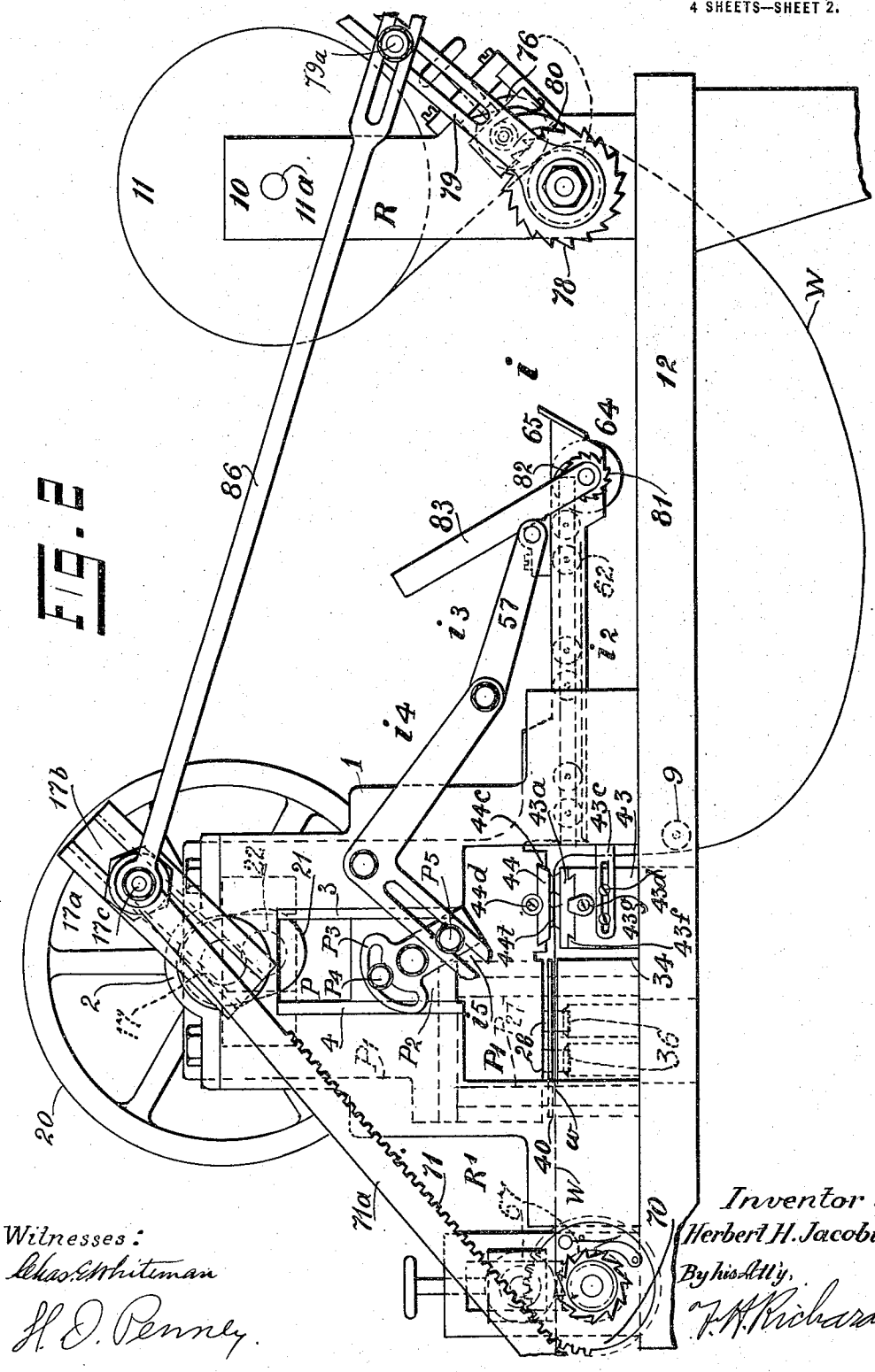

Witnesses:

Chas. E. Whiteman

H. D. Penney.

Inventor:

Herbert H. Jacobus

By his Atty.

F. H. Richards

COLUMBIA PLANOGRAPH CO., WASHINGTON, D. C.

H. H. JACOBUS.

MEANS FOR CUTTING AND PRINTING LABELS.

APPLICATION FILED APR. 7, 1914.

1,159,037.

Patented Nov. 2, 1915.

4 SHEETS—SHEET 3.

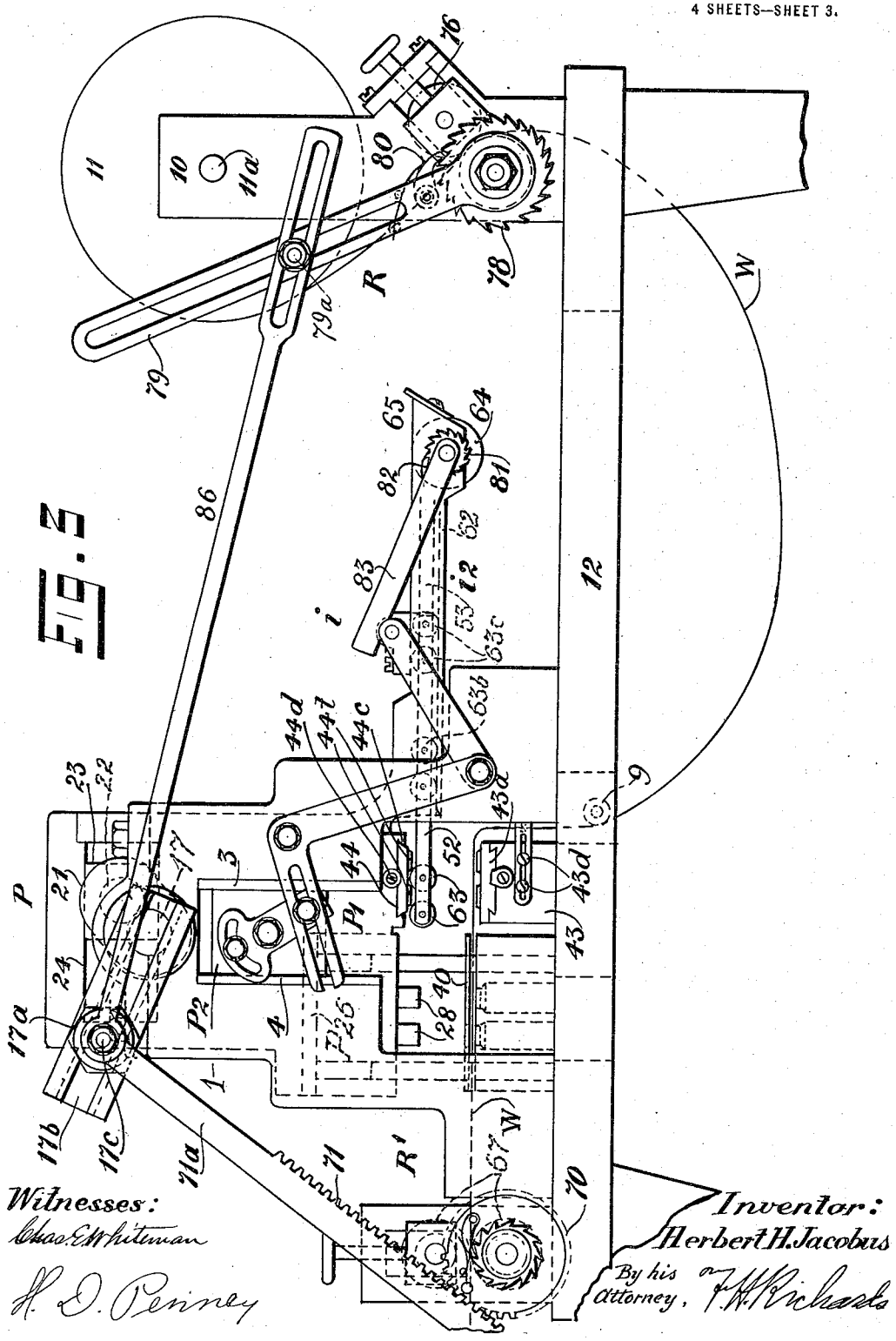

COLUMBIA PLANOGRAPH CO., WASHINGTON, D. C.

H. H. JACOBUS.

MEANS FOR CUTTING AND PRINTING LABELS.

APPLICATION FILED APR. 7, 1914.

1,159,037.

Patented Nov. 2, 1915.

4 SHEETS—SHEET 4.

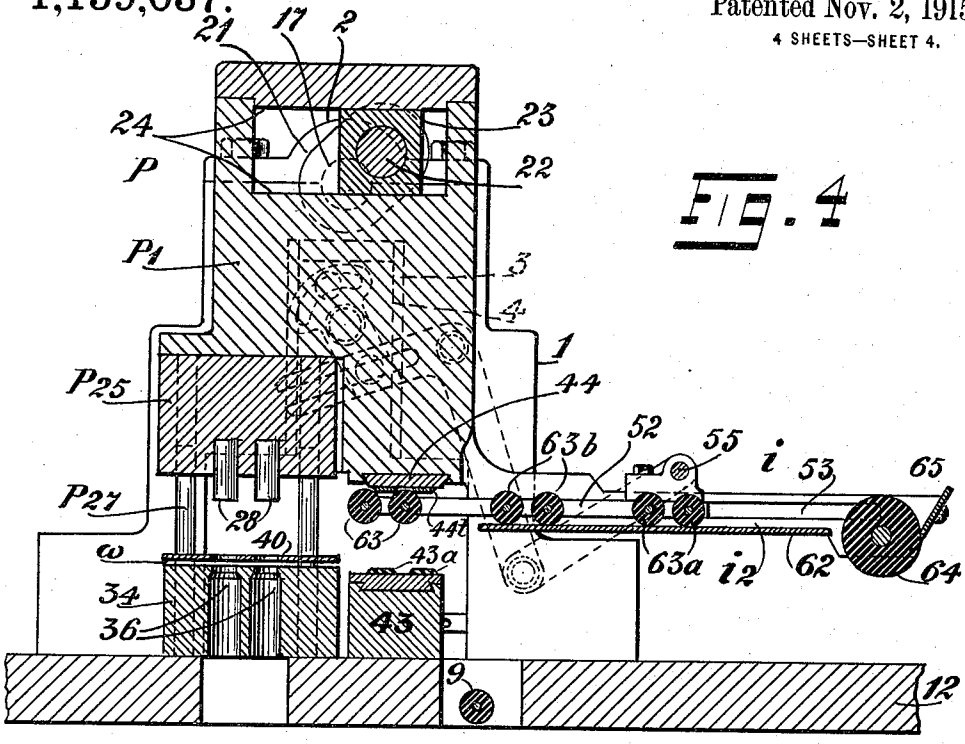

FIG. 4

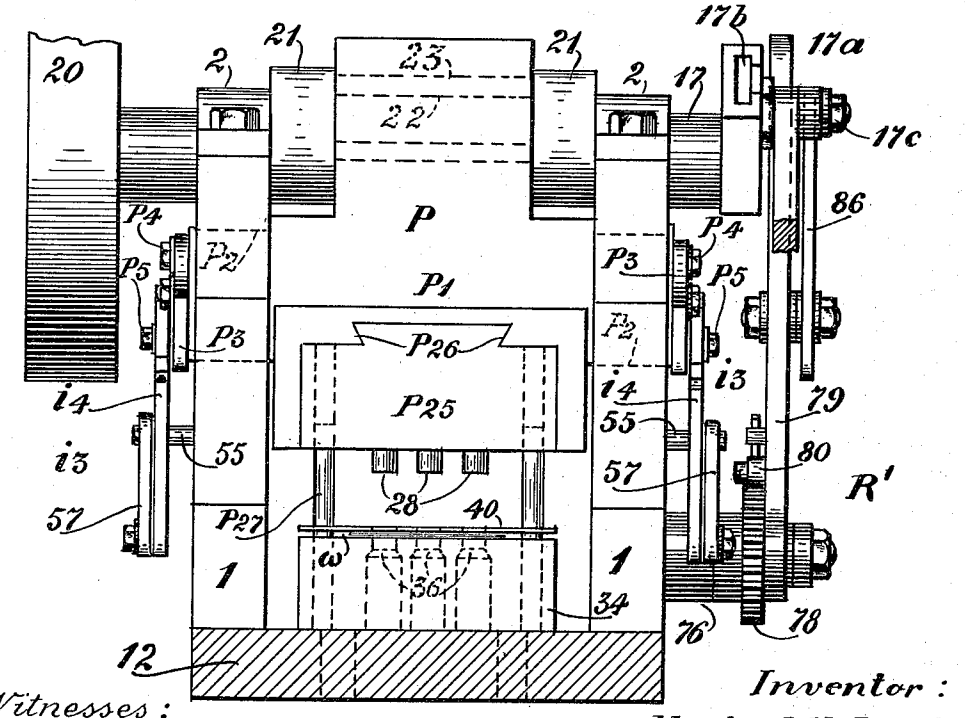

FIG. 5

Witnesses:

Chas. E. Whitman

H. D. Penney

Inventor:

Herbert H. Jacobus

By his Att'y F. H. Richards.

COLUMBIA PLANOGRAPH CO., WASHINGTON, D. C.

UNITED STATES PATENT OFFICE.

HERBERT H. JACOBUS, OF CEDAR GROVE, NEW JERSEY.

MEANS FOR CUTTING AND PRINTING LABELS.

1,159,037. Specification of Letters Patent. Patented Nov. 2, 1915.

Application filed April 7, 1914. Serial No. 830,118.

To all whom it may concern:

Be it known that I, HERBERT H. JACOBUS, a citizen of the United States, residing in Cedar Groove, New Jersey, in the county of Essex and State of New Jersey, have invented certain new and useful Improvements in Means for Cutting and Printing Labels, of which the following is a specification.

My present invention is an improvement upon that disclosed in my Patent No. 1,054,778 of March 4, 1913, for simultaneously printing labels on a web and punching out those already printed and is designed to secure more perfect registering and better and better-timed inking, to increase the output by gang operation and to reduce vibration and lost motion and thereby enable me to build a smoother-running and more nearly noiseless machine, which will also be cheaper, more durable, and less bulky. To these ends I have substituted gang type-forms and punches unitally assembled on a platen which is reciprocated in parallel guides, for the flexibly-mounted punch, independently mounted printing platen and vibrating-lever drive of said patent, have separated the paper-feed and ink-roller mechanisms and operably connected the latter with the platen, and use a plurality of label-type forms and a corresponding gang of punches.

The several reference numerals hereof, wherever possible, refer to parts like or having functions like the parts so designated in said patent.

In the drawings, Figure 1 is a plan; Fig. 2 a side elevation with the platen extended; Fig. 3 a like view with the platen retracted; Fig. 4 partial axial section corresponding with Fig. 3, and Fig. 5 a corresponding delivery-end elevation.

In the practice of my invention I provide a bed-plate 12 and, mounted thereon adjacent to the delivery-end, a guide frame 1 and at the feed-end a supply frame 10.

At the top of the guide-frame 1, I provide pillow bearings 2 and mount in them a crank shaft 17 on one end of which is fixed a driving and balance wheel 20 adapted to be connected with a source of power. Operably connected with said shaft, I provide a paper-supply roll 11 and paper-release mechanism R adapted to suitably unroll and liberate paper therefrom, both suitably mounted on the supply frame 10; a printing and punching mechanism P whose movable members are mounted on the guide frame 1 and whose abutment members are fixed to the bed-plate 12; inking mechanism i mounted on the guide frame 1; and a tension feed roll mechanism R′ mounted on the delivery end of the bed-plate.

The principal member of the printing and punching mechanism P is a platen P^1 slidably mounted by means of parallel engaging guides 3 and 4 formed respectively on the guide frame 1 and on check blocks P^2 extending transversely from said platen; which is engaged with said crank shaft and thereby reciprocated in said guides by means of a crank 21 and crank pin 22 fixed to said shaft and a block 23 mounted on said crank pin and operable thereby between and coacting with the driving faces 24 of a slideway formed in the outer end of said platen; and on whose inner face I mount a punch stock P^{25} armed with a plurality of punches 28 and adjustably mount a type plate 44, adapted to contain a plurality of label-type forms 44^t corresponding with the number of punches.

Adjustably mounted on the bed-plate 12 is a pad block 43 having adjustably engaged with its upper side, preferably by means of parallel dovetail guides, a pad plate 43^a bearing a plurality of pads severally registering with the label type-forms; and fixed thereon is a die block 34 containing die-holes 36 severally registering with the punches.

In order to insure perfect alinement of the punches and die-holes, the punch stock P^{25} is mounted on the platen P^1, by parallel (preferably dove-tail) guides P^{26} with considerable play and guide rods P^{27} are fixed in the die-block 34 or punch-stock P^{25} preferably in the former, extend into and closely fit corresponding sockets P^{27} formed in the punch-stock and thereby insure perfect alinement, which is not impaired by the play of the platen in its guides.

A stripper plate 40, perforated for the punches, is fixed to the die-block 34 and spaced therefrom to form a web-way, w.

The type-plate 44 is mounted transversely adjustably on the platen by means of engaging parallel (dovetail) guides 44^c and is adjusted and secured by screws 44^d. The pad-block 43 is held and longitudinally ad-

justable between slotted bars 43^c and clamped in adjusted position by screws 43^d engaging said block and bars. The pad-plate 43^a is transversely slidably engaged with the pad-block by means of parallel (dovetail) guides 43^f and adjusted and fixed by screws 43^g. These adjustments enable me to obtain exact registering.

My improved inking mechanism comprises a trough 12 secured to the platen P^1 and adapted to slide with the same in the anterior end of which trough I locate the fountain 65 and fountain roll 64, whose posterior end is open, whose bottom is the ink-plate 62 and in whose up-turned sides I form parallel guides 53, for the roll-carriage 52, on which are fixed a pair of draw-heads and a pivot-bar 55 therein for its operating connection.

The rolls are revolubly mounted in the frame 52 and comprise a pair of initial distributing rolls 63^a which take ink from the fountain roll 64 and feed it to the plate 62, a pair of secondary rolls 63^b which complete its distribution thereon and a pair of inking rolls 63 which take ink from the plate 62 and ink the type. I have found this arrangement of rolls hightly satisfactory in practice and much superior to that disclosed in the aforesaid patent.

I operate and time the translation of the ink rolls directly from the platen P^1 by means of an adjustable link-and-lever connecting apparatus i^3 which comprises a pair of bell-crank levers i^4 pivoted on the guide frame 1, connected with the inking frame rod 55 by links 57 and adjustably connected with the platen P^1 by means of settable arms P^3 swiveled on the platen, clamped in adjusted position by pinch screws P^4 and engaging the levers i^4 by means of pins P^5 which play in slots, i^5 in the bell-cranks i^4. The stroke of the ink rolls can be adjusted by swinging the arms P^3.

The fountain roll 64 is rotated by means of an operative connection with the inking frame 52 which comprises a ratchet wheel 81 connected with said roll, a heavy, posteriorly inclined rocking bar 83 pivoted coaxially with the roll and resting on the rod 55 of the frame 52 and a pawl 82 pivoted on said bar and adapted to engage the ratchet 81.

When the frame 52 advances toward the platen the bar declines (Fig. 3) and when said frame is retracted the bar is raised (Fig. 2) and such movement is communicated to the fountain roll by the pawl and ratchet wheel. Thus the rotation of the fountain roll and the ink supply depend upon and are proportional to the traverse of the frame 52 and are regulated therewith.

I improve the paper-supply mechanism by extending its frame 10 high enough to enable me to mount the supply roll 11 thereon, by its spindle 11^a, instead of providing a separate mounting therefor; and by anteriorly inclining the slot in which the bearing blocks of the releasing rolls 76, are mounted.

As in said patent I rotate the driven releasing roll 76 by means of a ratchet wheel 78 fixed thereto, a slotted rocking arm 79 pivoted co-axially therewith and a pawl 80 pivoted on said arm and adapted to engage said ratchet wheel. The tension rolls 67, are likewise provided with a ratchet wheel and pawl; but for the rocking arm I substitute a pinion 70 on which the pawl is pivoted.

I operably adjustably connect the paper release and tension rolls with the crank shaft 17 by means of an adjustable crank 17^a connected therewith comprising a slotted crank arm 17^b and a crank pin 17^c radially adjustable therein; a link 86 pivoted on said pin and a pin adjustable in a slot formed in the release-roll arm 79; and a link 71^a pivoted on said crank pin and provided with a rack 71 which engages the driving pinion 70 of the tension rolls.

The functional length of the arm 79 can be adjusted by shifting the pin 79^a in the slot thereof; and the functional length of the crank 17^a can be adjusted by shifting the crank pin 17^c in the slotted arm 17^b. The former adjustment enables me to adjust the release of paper to its draft by the tension rolls and the latter to adjust both release and draft simultaneously to the work of the machine.

The operation of my apparatus is as follows: A roll of paper 11, preferably with its back gummed, is mounted on the supply frame 10 to unroll from its inner side paper W, which is passed anteriorly between the release rolls 76, behind the guide roll 9, and between the type and pads, through the web way w between the die 34 and stripper plate 40, and engaged with the tension rolls 67. The machine being properly adjusted as aforesaid and the power switched on, the rotation of the crank shaft 17 alternately operates the release and feed rolls to supply paper and reciprocates the platen, type and punches and the inking rolls and intermittently rotates the fountain rolls; and labels are printed and simultaneously those previously printed are punched out of the web.

I claim as new and desire to protect by Letters Patent:

1. A label printing and punching machine comprising a frame with parallel guides thereon; a platen reciprocating in said guides; a type form and a punch on said platen, adapted respectively to simultaneously print labels on a web and to punch previously printed labels therefrom; an inking mechanism mounted to reciprocate with said platen and operably connected there-

with; paper feed mechanism adapted to feed a web of paper to said type and punch, means to operate said platen and paper-feed mechanism, inking rolls for said inking mechanism, and links for connecting the platen with said inking rolls so that the reciprocation of the platen will actuate to reciprocate said rolls across said type-form.

2. A label printing and punching machine comprising a bed-plate, a guide frame with parallel guides perpendicular thereto; a platen reciprocating in said guides, a type form on said platen, a punch stock loosely mounted thereon, and a punch fixed in said stock; a pad and a die-block fixed to said bed-plate; an inking mechanism mounted to reciprocate with said platen and operably connected therewith; paper-feed mechanism adapted to feed a web of papers to said type and punch, means to operate said platen and paper-feed mechanism, inking rolls for said inking mechanism, and links for connecting the platen with said inking rolls so that the reciprocation of the platen will actuate to reciprocate said rolls across said type form.

3. A label printing and punching machine comprising a bed-plate, a guide frame with parallel guides perpendicular thereto; a platen reciprocating in said guides, a type form on said platen and a punch stock loosely mounted thereon, guide bores formed and a punch fixed in said stock; a pad and a die-block fixed to said bed-plate and guide rods fixed in said die-block and engaged with said guide-bores in said punch-stock and adapted to aline said block and stock; an inking mechanism mounted to reciprocate with said platen and operably connected therewith; paper-feed mechanism adapted to feed a web of papers to said type and punch, means to operate said platen and paper-feed mechanism, inking rolls for said inking mechanism, and links for connecting the platen with said inking rolls so that the reciprocation of the platen will actuate to reciprocate said rolls across said type-form.

4. A label printing and punching machine comprising a guide frame with parallel guides therein; a platen reciprocating in said guides and a type form, and a punch on said platen; an inking mechanism comprising a trough, and a fountain and fountain roll and parallel guides in said trough, a roll carriage reciprocating in the guides in said trough and distributing and inking rolls mounted in said carriage, and an adjustable connection operably connecting said carriage and fountain roll with said platen and adapted to operate the former by the movements of the latter; paper-feed mechanism adapted to feed the web of paper to said said type and punch, and means to operate said platen and feed mechanism.

5. A label printing and punching machine comprising a guide frame with parallel guides therein; a platen reciprocating in said guides and a type-form, a punch and an adjustable arm on said platen; an inking mechanism comprising a trough, a fountain, a fountain roll and parallel guides in said trough, a roll carriage reciprocating in the guides in said trough, distributing and inking rolls mounted in said carriage and an adjustable connection operably connecting said carriage and platen, and comprising a pivotally mounted lever, a link connecting said lever and carriage and a slot-and-pin connection between said lever and said arm on said platen, and an operable connection between said carriage and fountain roll; paper-feed mechanism adapted to feed a web of paper to said type and punch, and means to operate said platen and feed mechanism.

6. A label printing and punching machine comprising a guide frame with parallel guides therein; a platen reciprocating in said guides and a type-form, a punch and an adjustable arm on said platen; an inking mechanism comprising a trough, a fountain, a fountain roll and parallel guides in said trough, a roll-carriage reciprocating in the guides in said trough, distributing and inking rolls mounted in said carriage, an adjustable connection operably connecting said carriage and platen and comprising a pivotally mounted lever, a link connecting said lever and carriage and a slot-and-pin connection between said lever and said arm on said platen, a ratchet wheel connected with said fountain roll, a pivotally mounted gravity lever in gravity engagement with said carriage and a pawl pivoted on said gravity lever and adapted to engage said ratchet-wheel; paper-feed mechanism adapted to feed a web of paper to said type and punch, and means to operate said platen and feed mechanism.

7. A label printing and punching machine comprising a bed-plate; a guide frame with parallel guides therein perpendicular to said bed-plate; a crank shaft mounted in said frame, a platen-driving crank on said shaft; a platen reciprocated in said guides by said crank and a type-form and punch on said platen; an inking mechanism operably connected with said platen; paper-feeding rolls and tension rolls mounted on said bed-plate to opposite sides of said guide frame and platen, an adjustable feed-driving crank on said crank-shaft, links connecting said adjustable crank with said feeding rolls and tension rolls, said links being pivotally connected to one another, and said adjustable crank comprising a slotted arm and a crank pin secured to the pivotal connection of said links and shiftably disposed in the slot of said slotted arm for adjusting said pivotal connection relative to said crank shaft.

8. A label printing and punching machine

comprising a guide frame with parallel guides therein; a platen reciprocating in said guides and a type form on said platen; an inking mechanism comprising a trough, and parallel guides in said trough, a roll carriage reciprocating in the guides in said trough and distributing and inking rolls mounted in said carriage, and a connection operably connecting said carriage with said platen and adapted to operate the former by the movements of the latter; paper-feed mechanism adapted to feed the web of paper to said type, and means to operate said platen and feed mechanism.

9. A label printing and punching machine comprising a guide frame with parallel guides therein; a platen reciprocating in said guides and a type-form and an adjustable arm on said platen; an inking mechanism comprising a trough, and parallel guides in said trough, a roll carriage reciprocating in the guides in said trough, distributing and inking rolls mounted in said carriage, a connection operably connecting said carriage and platen, and comprising a pivotally mounted lever, a link connecting said lever and carriage and a slot-and-pin connection between said lever and said arm on said platen, paper-feed mechanism adapted to feed a web of paper to said type, and means to operate said platen and feed mechanism.

10. A label printing and punching machine comprising a guide frame; a platen reciprocatingly mounted in said guide frame, a type-form and an adjustable arm on said platen; an inking mechanism comprising a trough, a fountain, a fountain roll and guides in said trough, a roll-carriage reciprocating in said guides, distributing and inking rolls mounted in said carriage, a connection operably connecting said carriage and platen and comprising a pivotally mounted lever, a link connecting said lever and carriage and a slot-and-pin connection between said lever and said arm on said platen, a ratchet wheel connected with said fountain roll, a pivotally mounted gravity lever in gravity engagement with said carriage and a pawl pivoted on said gravity lever and adapted to engage said ratchet-wheel; paper-feed mechanism adapted to feed a web of paper to said type and punch, and means to operate said platen and feed mechanism.

HERBERT H. JACOBUS.

Witnesses:
H. D. PENNEY,
J. CHRISTOPHER.

Copies of this patent may be obtained for five cents each, by addressing the "Commissioner of Patents, Washington, D. C."