No. 771,334. PATENTED OCT. 4, 1904.

S. B. STEWART, JR.

THIRD RAIL INSULATOR.

APPLICATION FILED MAY 31, 1902.

NO MODEL.

Fig. 1

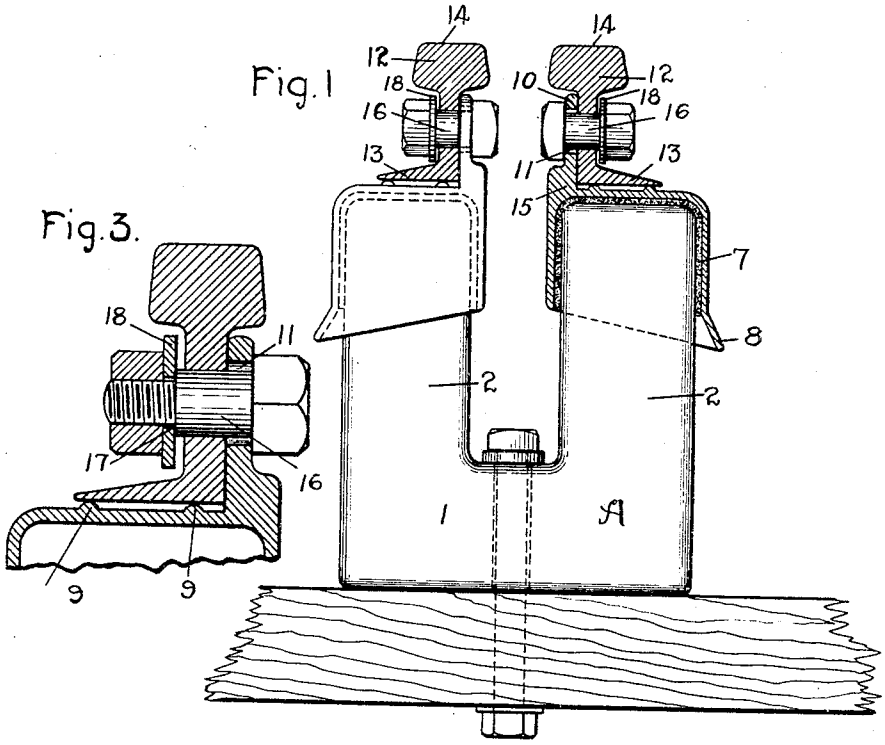

Fig. 3.

Fig. 2.

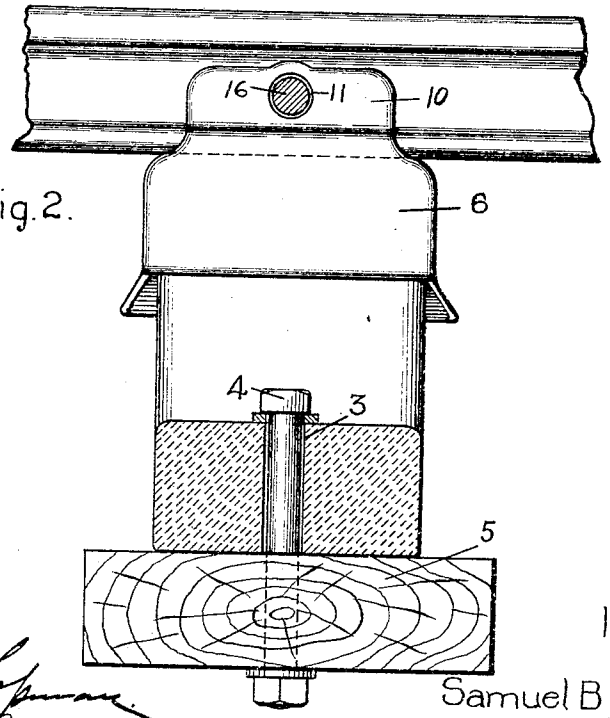

Witnesses:

Art. C. Chapman

Helen A. Ford

Inventor.

Samuel B Stewart Jr

by Allen B. Davis

Atty.

No. 771,334. Patented October 4, 1904.

UNITED STATES PATENT OFFICE.

SAMUEL B. STEWART, JR., OF SCHENECTADY, NEW YORK, ASSIGNOR TO GENERAL ELECTRIC COMPANY, A CORPORATION OF NEW YORK.

THIRD-RAIL INSULATOR.

SPECIFICATION forming part of Letters Patent No. 771,334, dated October 4, 1904.

Application filed May 31, 1902. Serial No. 109,605. (No model.)

To all whom it may concern:

Be it known that I, SAMUEL B. STEWART, Jr., a citizen of the United States, residing at Schenectady, in the county of Schenectady, State of New York, have invented certain new and useful Improvements in Third-Rail Insulators, of which the following is a specification.

My invention relates to insulating-supports for use on electric railways operated by the so-called "sectional third-rail" system, and its object is to provide a compact and efficient support of insulating material and means for attaching thereto both the conducting and pick-up rails. Heretofore it has been customary to provide independent supports for the conducting and pick-up rails, and because of this arrangement the rails could not be brought into proximity with each other to form substantially a single line of contact surface or to permit of the use of a single-contact device on the car.

According to my invention the conducting and the pick-up rails are seated loosely upon metallic caps which are placed upon the respective arms of twin supports of suitable insulating material, whereby the rails are completely insulated and at the same time held in close proximity to each other, so that the room occupied by the two rails is but slightly more than that occupied by a single rail.

My invention will be more readily understood by reference to the accompanying drawings, forming a part of this specification, in which—

Figure 1 is a side elevation of my improved insulating-support with one cap and both rails shown in section. Fig. 2 is a central section of the support with the cap and rail in side elevation; and Fig. 3 is an enlarged section of the rail and upper portion of the cap, showing the means of connection.

In the embodiment of my invention shown in the drawings, A is the U-shaped twin support of insulating material, such as porcelain, and consisting of a broad base portion 1 and two integral arms 2. The base portion 1 is provided in its center with the hole 3, through which a bolt 4 passes and by which the support is secured in place upon the beam or sleeper 5 of the road-bed.

The caps 6 are cored out somewhat larger than the upper ends of the arms 2 of the support A, and the space thus formed is filled with asbestos 7, felt, or other suitable material, whereby the caps are held out of immediate contact with the support A. The lower flange of the caps is made long and flaring on the outside edge to form a drip 8. The upper surface of the cap 6 is provided with ribs or projections 9, upon which the rails rest and which serve to prevent the adhesion of the rails to the caps by rust-scale. The caps have projecting vertically from the inner sides of their upper faces vertical ears or projections 10, provided with large bolt-holes 11. The rails 12 have but one bottom flange 13, the other flange being removed in order that the working surfaces 14 of the conductor-rail and the pick-up rail may be brought into close proximity. When the rails are in place, the inner sides of the webs 15 or the sides from which the bottom flanges have been removed fit up to the outer faces of the vertical ears or projections 10, while the bearing-surfaces of the flanges 13 rest upon the ribs or projection 9. In order that the rails may have slight longitudinal and vertical movement relative to the supports A and their caps 6 to permit of expansion and contraction and vibration of the rails without affecting the insulating-support A, I provide a loose connection between the rails and the caps 6, consisting of a bolt 16, having a shoulder 17 in its shank spaced at a distance from the under side of the head greater than the aggregate thickness of the ear or projection 10 and the web 15 of the rail through which the bolt passes. A washer 18 seats against the shoulder and is bound thereon when the nut is screwed home without causing a binding between the bolt and parts held or between said parts. The bolts 16 are of less diameter than the holes 11 in the ears or projections, whereby playroom is formed between bolt and ear.

It is to be noted that by means of my invention the conducting and pick-up rails may

be brought as near together as desired, the only condition which limits the space between the rails being the necessary practical distance between the contact-surfaces 14 of the rails.

What I claim as new, and desire to secure by Letters Patent of the United States, is—

1. The combination of a twin support of insulating material, a cap carried by each arm of said support, and a metallic rail connected to each of said caps.

2. The combination of parallel rails of conducting material, U-shaped supports of insulating material upon which said rails are carried, and caps engaging said support and bolted to said rails.

3. The combination of a support of insulating material, a cap seated upon said support and provided near one side of its upper surface with an ear or projection, and means for connecting a rail to said ear or projection.

4. The combination of a support of insulating material, a cap seated upon said support and provided with an apertured ear, and a bolt of less diameter than the aperture of said ear for loosely connecting a rail thereto.

5. The combination of a metallic cap provided with an apertured ear, and a bolt for holding a rail thereto of less diameter than the aperture of said ear and having a shouldered shank against which the nut may impinge.

6. As an article of manufacture, a metallic cap having a cored-out recess and a drip-flange at its lower end, an attaching-ear located near one edge of its upper end, and ribs or projections on said upper end between said ear and the opposite edge thereof.

In witness whereof I have hereunto set my hand this 27th day of May, 1902.

SAMUEL B. STEWART, JR.

Witnesses:

BENJAMIN B. HULL,

HELEN ORFORD.