March 22, 1932. J. A. CRABTREE 1,850,661

ELECTRIC SWITCH

Filed Nov. 23, 1928 2 Sheets-Sheet 1

Fig. 1.

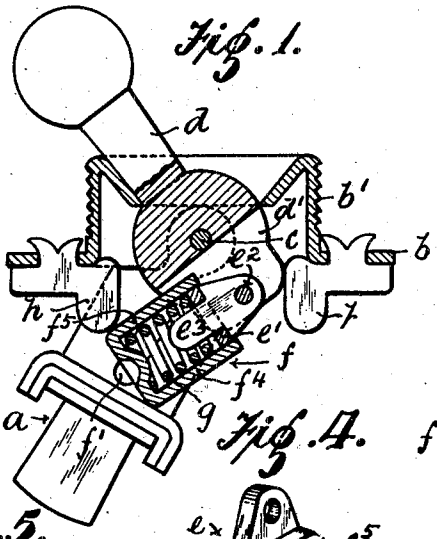

Fig. 2.

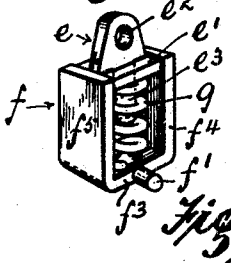

Fig. 3.

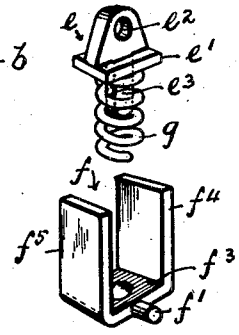

Fig. 4.

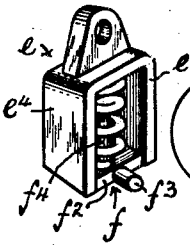

Fig. 5.

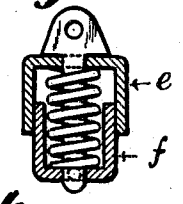

Fig. 6.

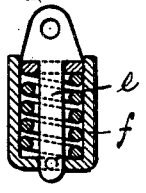

Fig. 7.

Fig. 8.

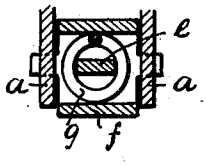

INVENTOR
John Ashworth Crabtree
BY
B. Singer
ATTORNEY

March 22, 1932. J. A. CRABTREE 1,850,661

ELECTRIC SWITCH

Filed Nov. 23, 1928 2 Sheets-Sheet 2

Fig. 9.

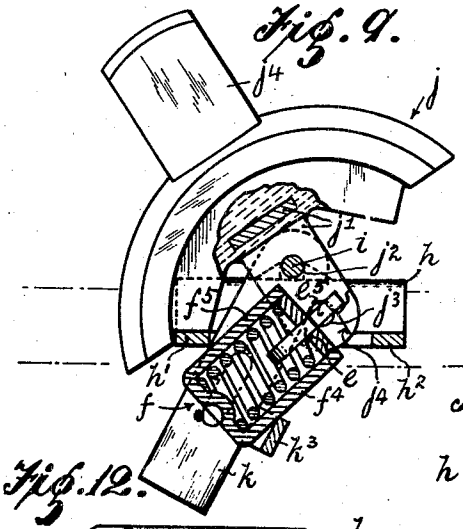

Fig. 10.

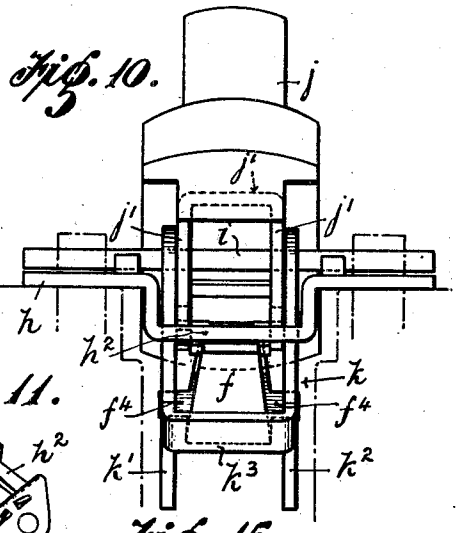

Fig. 11.

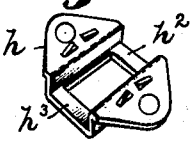

Fig. 12.

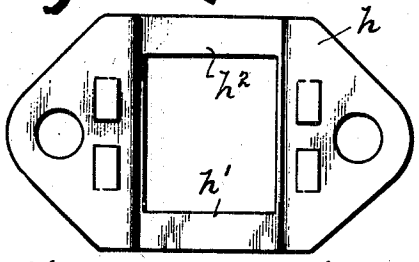

Fig. 15.

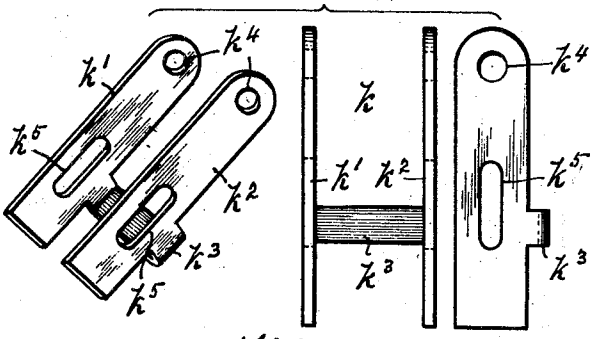

Fig. 13.

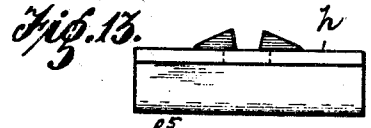

Fig. 14.

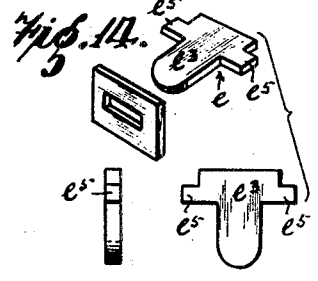

Fig. 16.

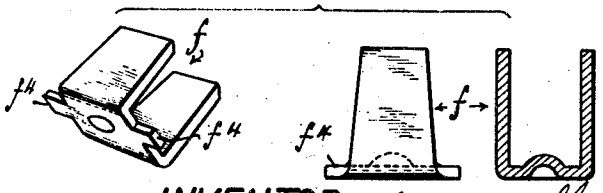

INVENTOR
John Ashworth Crabtree
BY B. Singer
ATTORNEY

Patented Mar. 22, 1932 1,850,661

UNITED STATES PATENT OFFICE

JOHN ASHWORTH CRABTREE, OF SUTTON COLDFIELD, ENGLAND

ELECTRIC SWITCH

Application filed November 23, 1928, Serial No. 321,460, and in Great Britain November 29, 1927.

My present invention is developed from the invention claimed in the specification of my British Patent No. 140180 inasmuch as it comprises improvements in quick-make and quick-break spring-toggle switches that embody means whereby, as part of every normal operation of the mechanism involved in the invention, the moving contact-member or rocker arm is positively started in its movement from the "on" or "off" position by and during the initial or spring-stressing finger-actuation of the tumbler or operating lever.

According to the invention described in the said specification, there is interposed between and pivoted to the tumbler and the rocker-arm, a floating spring link consisting of two telescoping elements which are encircled by, and subjected to the thrust of, a compression spring, and the positive starting of the rocker arm is accomplished by providing one of the link-elements with lever arms or extensions that contact with fulcrum abutments which are fixed in such relation to the pivot center of the rocker that, by and during the initial or spring-stressing movement of the tumbler, one of the said lever extensions of the floating link co-acts with its fulcrum-abutment to shift the pivotal connection between the said link and the rocker-arm and thus mechanically displace the said rocker from its "make" or "break" position, as the case may be.

My present invention consists in improved positive-start snap-action switch mechanism which is characterized by the embodiment therein of a spring-link wherein one of the telescopic elements is adapted directly to co-act with the stationary fulcra of the positive start system, and wherein the telescoping elements of the link assembly are preferably so inter-connected with one another and with the compression spring, that, during the angular displacements of the said link-assembly as a unit, the said elements are constrained to move in rectilinear relativity for preserving parallelism between the spring-thrust abutments and safeguarding the spring against subjection to any stress other than direct compression stress.

The improvements also include means whereby the floating link adapted to function as the levering element of the positive-start system enables or facilitates the production of the whole or practically the whole of the parts of the mechanism (less the spring) from sheet metal pressings and the assembly of the said parts without riveting, while the provision made by the invention for safeguarding of the spring not only substantially reduces the risk of spring-breakages, but even enables the said spring to function satisfactorily after a breakage.

My present invention is hereinafter described in its application to tumbler switches in which stationary fulcra are arranged on opposite sides of the tumbler-pivot housing so that positive-start displacement of the rocker-arm is realized, as an inevitable part of every normal action of the improved mechanism, during each spring-stressing operation of the tumbler in both the "make" and "break" directions. The said invention also applies to switches wherein the positive start is obtained in one direction only (i. e. either in the "make" or the "break" direction) in which case a single fulcrum-abutment is provided on the appropriate side of the tumbler-pivot housing.

Figure 1 of the accompanying drawings shows a tumbler switch embodying one application of my invention in which the telescoping elements of the floating levering link are made from sheet-metal pressings.

Figure 2 is a perspective view of the levering-link assembly, and

Figure 3 shows the component parts thereof separately.

In this switch, the rocker-arm *a* is underslung from a pivot *c* which is secured across the socket of the bridge *b* and whereon the

tumbler d is also mounted. The connection between the tumbler-extension d^1 and the arm a is made by a floating spring-link constituted by two telescoping or slidably engaging elements e f, pivoted or trunnioned respectively to the tumbler-extension and to the rocker-arm. The bridge b is fixed to the base or back of the switch and carries, on opposite sides of the pivot c, the pieces h that constitute the stationary fulcra of the positive-start system.

The element f of the link assembly is a substantially U-shaped piece whose base f^3 serves as one of the thrust-abutments for the compression-spring g, and carries trunnions f^1 for pivotally connecting the said element with the rocker-arm a, while its limbs or branches f^4 f^5, are substantially parallel and serve as containing guides for a sliding spring-thrust e^1 which is carried on the shank e^3 of the link element e, and is maintained, by the thrust of the link-spring, against shoulders at the head of the said shank e^3.

Preferably, and as in the construction shown, the spring g is of such external diameter that it fills, or substantially fills, the space between the branches f^4 f^5 of the link element f, while the shank e^3 of the element e is preferably of a width practically equal to the internal diameter or bore of the said spring so that it serves definitely to center and locate the latter in relation to the opposed thrust abutments e^1 f^3 whose parallelism is ensured by the sliding fit of the thrust e^1 between the branches of the element f and by the fitting of the shank e^3 within the bore of the spring (see Figure 7).

From this inter-connection of the telescopic elements e f, and their utilization as a means for definitely confining and locating the spring, it follows that from beginning to end of each operation of the switch (in which the link assembly is displaced angularly as a unit during the compression and extension of the spring between its thrust-abutments), the said spring is confined against lateral flexure or distortion and is subjected only to direct compressional stress, whereby the risk of spring leakage is reduced to a minimum. If, however, a breakage should occur, the broken pieces are maintained in alignment by their inclusion between the parts e^3, f^4, f^5, of the link and the spring remains effective for realizing the snap-action of the mechanism.

The sides or limbs f^4 f^5 of the link element f in addition to housing and locating the spring and serving as containing guides for the sliding thrust e^1 also function as the levering parts of the positive-start system. For this purpose, the element f is so dimensioned, and the contact edges of the bridge-abutments h and the pivot-centers c, f^1, e^2, arranged in such relation to one another that, when the rocker arm is at rest in either its "off" or "on" position, the thrust of the link-spring maintains the link and tumbler in toggle-like relationship and also maintains one of the limbs (f^4 and f^5) in contact with its complementary fulcrum-abutment h. Then, by and during the next initial or spring-stressing displacement of the tumbler by finger-actuation, the contacting limb is constrained to lever upon the said fulcrum and so impose upon the tumbler-displaced link, an additional displacement that shifts the trunnion connection f^1 between the link and the rocker and starts the said rocker in its "break" or "make" movement before the compression of the spring has been completed and the centre e^2 of the toggle carried beyond the centre c to enable the movement of the rocker to be completed by spring extension.

In the levering-link assembly shown in Figure 1, the spring-locating shank e^3 of the link e is so short that it will not foul the bottom of the element f even when the link is telescoped to the maximum extent on dead-center of the toggle system being reached.

Alternative constructional forms of levering link assembly, adapted for production from the sheet-metal pressings are shown in Figures 4, 5, and 6.

In Figure 4, the element e which embodies an eye-piece for pivoting to the tumbler, is substantially U-shaped and its side-limbs e^4, e^5, are adapted to co-act with the stationary fulcra of the positive start system in addition to assisting in the location of the link-spring while the element f comprises a spring-thrust f^3 that is situated between and guided by the limbs e^4, e^5, and carries trunnions f^3 for pivotally engaging the rocker-arm, and a stem f^4 that occupies the bore of the spring and also assists in the location.

The link, Figure 5, comprises two telescoping U-shaped elements e f, the side-limbs of either of which may be adapted for co-action with the stationary fulcra of the positive-start system. The element e includes a shouldered spring-guide pin whose head is adapted for pivoting to the tumbler and whose shank is extended through and slidable in a guide-hole in the bottom or trunnioned end of the element f. This guide pin assists the co-engaging side limbs of the elements to maintain the opposed spring abutments of the link in parallelism and need not fill the bore of the spring as is preferable in the link constructions, Figures 1 to 4.

The link construction, Figure 6, is similar to that shown in Figures 1 to 3, except that the shank of the element e is extended through and slidable in a hole in the trunnioned end of the element f to maintain parallelism between the spring-thrusts.

Figure 7 shows a link assembly e, f, g, as in Figures 1 to 3 applied to a tumbler-switch wherein the rocker arm a swings upwards

from the base during its "break" movement, h h being the stationary fulcra of the positive-start system with which the side limbs of the link-element respectively co-act.

Figure 8 is a section of Figure 7 on the dotted line 8. This figure is also referred to in the description of Figure 1 since it shows how, in both these constructions, (Figures 1 and 7), the shank of the link element e fills the bore of the spring which latter substantially fills the space between the side-limbs f^4 f^5, of the link-element f.

It will be noted that the rocker arm or contact member a has spaced side walls and that the link element f is arranged between said side walls, so that the link is confined against lateral displacement by said walls of said contact member and is held directly in line with the line of stress when the switch is operated, so that positive start of the switch is assured and maximum efficiency maintained during all movements of the switch members.

Figures 9 and 10 show an application of my invention to a tumbler switch in which the pivot-pin i of the tumbler j and rocker arm k are carried by a socketless bridge or housing (shown separately in perspective, sectional plan and elevation in Figures 11, 12, and 13) which embodies bars h^1, h^2 that serve as the stationary fulcra of the positive-start system. These fulcrum-bars are disposed on opposite sides of, and below the plane of, the pivot i so that one or other of the side-limbs f^4, f^5 of the link-element f contact with the complementary bar h^1 or h^2 when the switch is at rest.

This combined pivot-housing is a one-piece member of simple form that lends itself readily to production from a sheet metal pressing and the pivot-pin i may be secured thereto by the screws (shown in dotted lines) that fix the said pivot-housing to the bridge and may be side-buttressed intermediate the fixing screws and the part that carries the tumbler and rocker arm by pairs of ears or projections raised out of the metal of the pressing.

The switch shown in Figures 9 and 10 further exemplifies how my present invention, by virtue of simplifying the positive start system and effectually safeguarding the snap-action spring, facilitates the construction of an efficient tumbler switch mainly from sheet metal pressings and the assembly of such components without riveting.

Thus, in the said switch, the tumbler comprises a body j made of molded insulating material and an inverted U-shaped metal extension piece j whose legs are pierced with holes j^2 j^3 respectively to accommodate the tumbler-pivot i and the trunnions e^5 of the spring link. The link elements e f, produced from sheet metal pressings, are shown separately in Figures 14 and 16. The element e comprises a head or shoulder piece on the stem j^3 of which the spring-thrust plate is strung, while its head portion carries trunnion pieces e^5 for pivoting the link to the tumbler, this assembly being provided for by forming in one of the legs of the tumbler-extension, a gate or aperture leading from the end of the leg into the pivot-hole j^3 thereof, the width of this gate being a little less than the said pivot-hole j^3 but sufficient to afford passage for a trunnion e^5 of the element e. The other leg of the extension is pierced with an ordinary or un-gated pivot-hole and the assembly of the piece e with the tumbler is effected by first engaging one of the trunnions e^5 in the un-gated hole and then passing the other trunnion into the other hole by way of the gate.

The rocker arm k (shown separately in Figure 15) is formed from a sheet metal pressing and comprises a pair of parallel blades k^1 k^2 connected by a transverse tie-piece k^3. The blades are pierced at k^4 to accommodate the pivot pin i and are also slotted at k^5 to provide engagements for the trunnions f^4 of the link element f (Figure 6). The slots f^4 are of such a length as to enable the easy engagement of the link-trunnions and of the location of the said element f in its prescribed position between the blades.

The assembly of these parts into the complete switch movement may be performed by connecting up the link elements e f respectively to the tumbler-extension and to the rocker arm, then placing the spring within the link-element f (the bottom of which has a spring-locating boss as shown in Figure 16) and then bringing the two link elements into such relationship as to include and compress the spring between the bottom of the element f and the thrust-piece of the element e. In this last operation, the pivot holes k^4 of the rocker arm are brought into register with the pivot holes j^2 of the tumbler extension, thus enabling the insertion of the pivot-pin i through the registering holes k^4 j^2 for connecting the tumbler, the rocker-arm and the spring-link into a unit wherein the thrust of the spring maintains the link-trunnions e^5 f^4 in their prescribed pivot engagements with the tumbler and rocker respectively. The final assembly of the tumbler-rocker-link unit in working relation to the positive-start fulcra is performed by passing the rocker arm and link through the space between the fulcrum-bars of the pivot-pin housing and anchoring the ends of the pivot-pin i by fastenings that secure the said housing to the switch-base.

Having described my invention, what I claim and desire to secure by Letters Patent is:—

A tumbler-switch of the class described, comprising an operating tumbler, a contact member having spaced side walls, an axially extensible link connecting the tumbler with

the contact member, said link comprising two elements one of which is movable axially in the other, and also comprising a spring active to move said elements outwardly in opposite directions, and a pair of stationary abutment fulcrums one at each side of one of said link elements, and upon one of which said last named element directly levers at the start of each operation of the switch, the said link being arranged between and one of its elements being laterally supported by the side walls of said contact member.

In witness whereof I affix my signature.

JOHN ASHWORTH CRABTREE.