Nov. 26, 1957 W. J. ANDERSON 2,814,726

ELECTRICAL MUSICAL INSTRUMENTS

Filed Jan. 4, 1955

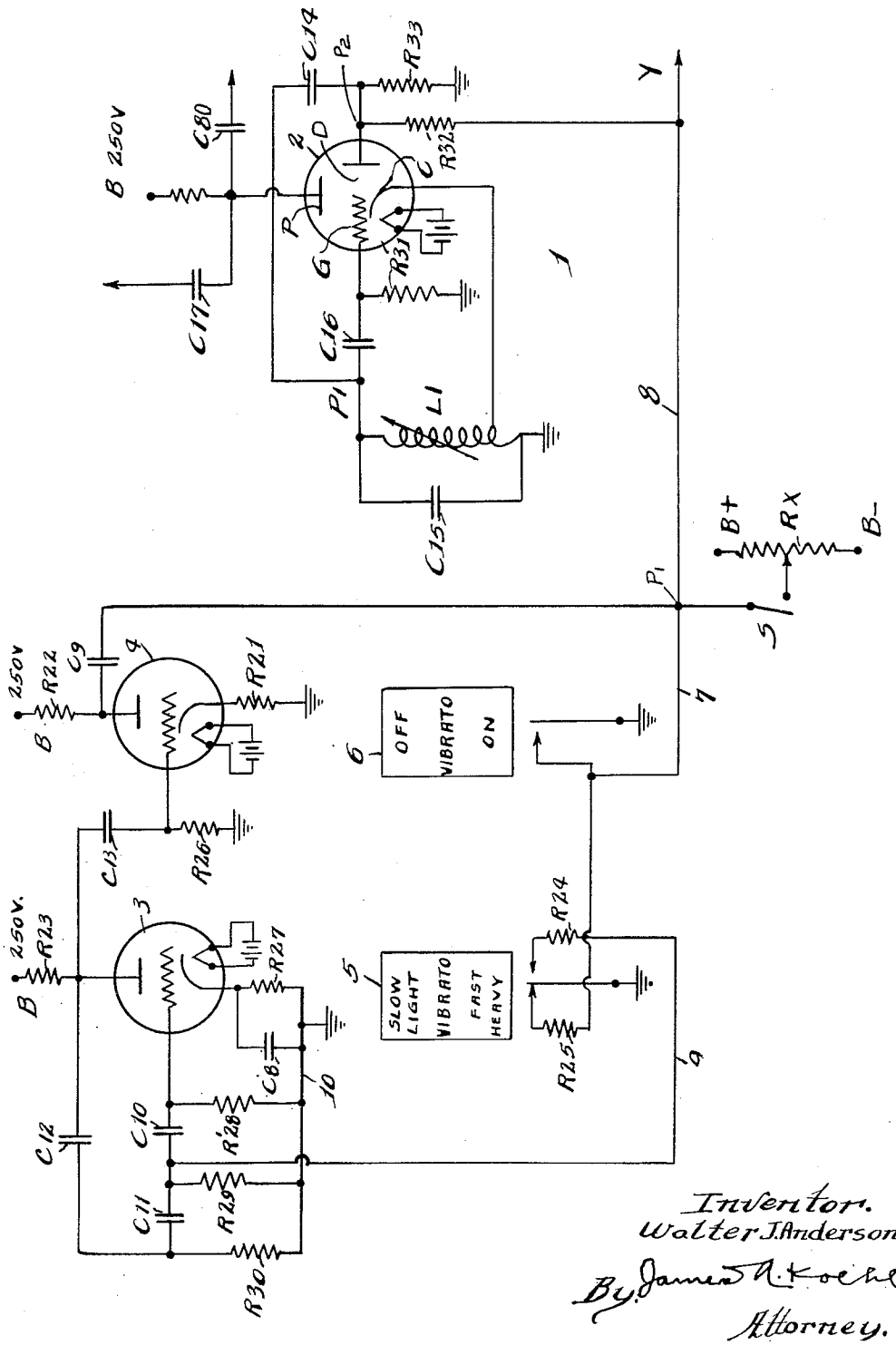

Inventor.
Walter J. Anderson.
By James A. Koehl.
Attorney.

United States Patent Office 2,814,726 Patented Nov. 26, 1957

2,814,726

ELECTRICAL MUSICAL INSTRUMENTS

Walter J. Anderson, Elgin, Ill., assignor, by mesne assignments, to Chicago Musical Instrument Company, Chicago, Ill., a corporation of Illinois

Application January 4, 1955, Serial No. 479,784

5 Claims. (Cl. 250—36)

My invention relates generally to electrical musical instruments and more particularly to improved means for introducing a vibrato effect by changing the frequency of oscillation of a tone signal producing or frequency controlling oscillator.

In prior musical instruments employing oscillators for the generation or control of a musical control tone signal, various expedients have been adopted to introduce the vibrato effect. The most successful of these has been the system described in the Larsen Patent No. 2,470,705 and the Hanert Patent No. 2,580,424, both employing a capacitive element in series with a triode tube, the combination being used in parallel with an LC tank circuit of an audio oscillator. In this system a 6-cycle vibrato voltage is applied to the grid of the above mentioned triode causing the plate impedance of the triode to alternately become very low and very high, which in turn alternately effectively connects and disconnects the aforementioned capacitive element in parallel with the resonant tank circuit with a subsequent change in frequency of oscillation at a vibrato rate.

It is a primary object of my invention to provide an improved vibrato apparatus for electronic oscillators which may be manufactured at a lower cost and which will impart a smoother vibrato effect to a tone signal generating oscillator throughout a wider frequency range with no special tapering of parts because of the self-biasing effect and which is more stable with respect to tuning for the same reason.

Another object of my invention is the production of vibrato effects and musical sounds resulting from activation of a loudspeaker in response to transmission thereto of amplified tone signals of musical frequency.

A still further object is the provision of means for producing vibrato effects electronically and for controlling the frequency thereof as desired.

Another object is the provision of means for producing vibrato effects in a system employing master oscillators for controlling operation of generators of audio frequency tone signals.

Another object is the provision of means for producing vibrato effects in a tone generating system employing stabilized oscillators operating at predetermined tone frequencies corresponding to the pitch relation of the notes of the chromatic scale, the arrangement of said means in connection thereof in said system being such as to insure against any change in pitch whether the vibrato is on or off.

Other objects will appear from the following description, reference being had to the accompanying drawing which is a schematic wiring diagram of the invention.

In the accompanying drawing the figure is a diagrammatic illustration of the invention.

The circuit diagram shows a tone signal generating oscillator 1 comprising a triode diode 2 which has its cathode C connected to ground through a portion of inductance L1. The plate P of triode 2 is connected

to a suitable potential B through a load resistor R1. The grid G of triode 2 is connected to ground through resistor R31 and by way of condenser C16 through the junction P1 of a variable inductance L1, condenser C15 and condenser C14, providing a tuned resonant circuit for oscillator 1. The capacity of the resonant circuit is determined by capacitors C15 and C14. Condenser 14 is connected between junction P1 and the diode D of tube 2. The diode D is connected to ground through load resistor R33 and to junction P2 by resistor R32. The feed-back path is through the lower portion of the inductance L1 from ground to cathode C. The output signal is derived from the plate P of the tube 2 through blocking condenser C17. Locking signal for cascaded followers is adapted to be similarly supplied through condenser C80. Tuning is achieved by variable inductance L1.

The effectiveness of condenser C14 in determining the frequency of oscillation of oscillator 1 is determined primarily by the impedance of diode D which serves to partially connect condenser C14 in shunt with the resonant circuit mesh C15, L1.

The vibrato oscillator 10 comprises a triode 3, the cathode of which is connected to ground by resistor R27 and by-pass condenser C8, and the plate of which is connected to a source of plus potential B through load resistor R23. The control grid of triode 3 is connected to ground through resistor R28 and to resistor R29 and condenser C11 by condenser C10, condenser C11 connecting the juncture of condenser C10 and resistor R29 to the juncture of resistor R30 and condenser C12, the other ends of resistors R30 and R29 being connected to ground with the other end of condenser C12 connected to the plate of triode 3. The mesh comprising resistors R30, R29 and R28 and capacitors C12, C11 and C10 forms a phase shift network which will shift the signal appearing on the grid of triode 3 relative to that on the plate of said triode by approximately 180°, thereby sustaining oscillation at a low frequency of approximately 6 cycles per second, which rate is determined largely by the RC values of the mesh.

The output signal on the plate of the triode 3 is coupled to the grid of a triode amplifier tube 4 by condenser C13. The grid of tube 4 is connected to ground by resistor R26 and the cathode of tube 4 is connected to ground through biasing resistor R21. The plate of tube 4 is connected to positive potential source B by load resistor R22. Coupling condenser C9 serves to connect the output 6-cycle vibrato signal from the plate of tube 4 to the junction P2 of resistor R32 and the vibrato control tabs 5 and 6 by means of connecting leads 8 and 7 respectively. Lead 9 serves to connect the junction of condensers C11 and C10 and resistor R29 to the vibrato control tab 5.

When the vibrato control tab 6 is in "off" position, junction P2 is connected to ground by way of lead 7. When vibrato control tab 6 is in "on" position, junction P2 is ungrounded and the 6-cycle signal voltage from the plate of triode 4 is transmitted to diode D by way of lead 8 and resistor R32.

When vibrato control tab 5 is in "fast heavy" position, resistor R24 is connected in shunt to resistor R29, causing the vibrato frequency to increase in rate. When the vibrato tab control is in "slow light" position, shunting resistor R24 is removed from resistor R29 and voltage dividing resistor R25 connects junction P2 to ground, resistor R25 acting in conjunction with output condenser C9, amplifier tube 4 and resistor R32 to reduce the vibrato signal voltage applied to diode D.

When the vibrato control tab 6 is in "off" position, junction P2 is grounded and no vibrato oscillator signal

voltage is applied to diode plate of diode D. Under these conditions, the diode is self-biased because of audio signal voltage coupled from the resonant tank circuit L1, C15 by condenser C14. I have discovered that by judicial choice of C14, R33 and R32, optimum self-biasing on diode D occurs such that the diode D impedance in conjunction with resistors R33 and R32 approximately equals that of condenser C14. Thus the condenser C14 is only partial effective as a tuning element in determining the resonant frequency of the LC circuit when the control tab 6 is in "off" position.

When the vibrato tab control 6 is in the "on" position, a 6-cycle vibrato signal voltage from triode amplifier tube 4 is applied through condenser C9, lead 8 and resistor R32 to diode D. This 6-cycle signal voltage causes diode plate D to alternately conduct heavily and lightly, in alternation, thereby raising and lowering its impedance relative to the self-biased impedance resulting from the audio signal voltage applied through condenser C14. The net result is that, under these conditions, C14 is alternately more effective and less effective at a 6-cycle rate as a capacitive element in shunt across the resonant circuit L1, C15.

It has been my observation that with the above mentioned judicial choice of C14, R33 and R32, no tailoring of parts is required throughout the tuning range of at least one octave. Normally, vibrato systems employing condensers in shunt with tuned circuits require inverse tapering of the condenser values in proportion to frequency thereof to insure constant vibrato amplitude throughout the frequency range employed. The nature of the self-biasing means of diode D is such that in my invention automatic frequency compensation results. This may be explained in the following manner:

As the oscillator frequency increases, impedance of condenser C14 becomes lower for higher frequencies, causing a greater audio signal to be applied to diode D, resulting in a greater self-biasing of the aforementioned diode with attending increase in diode impedance and subsequent reduction of the effectiveness of condenser C14 as a tuning element. Thus, the change in capacitive reactance of condenser C14 over the tuning frequency range is offset by the subsequent increased impedance of diode D due to automatic self-bias.

The design of the master oscillator with its frequency control circuit depends upon the maximum extent desired for the frequency swing. In a frequency vibrato to be used for musical purposes, the extent of the frequency sweep likely would rarely exceed 5%, which is a little less than a semi-tone. This would correspond to a change of approximately 10% in either the inductance or the capacity L1 or C15 of the tank circuit, as the frequency is inversely proportional to the square root of the product of the inductance and the capacitance. It has been found, however, that if C14 is on the order of one-fourth of C15, an adequate maximum swing can be obtained somewhat less than 5%, provided the control tube is operated so that its dynamic diode resistance can become approximate in magnitude to that of the reactance of C14 at the frequency of the master oscillator concerned.

In selecting the proper values, the resistance R33 should have a reactance several times that of C14 at the oscillator frequency. For a given tube 2 the optimum value of C14 is such that its impedance equals the average value of the diode resistance of the tube (optimum is used in the sense that the greatest frequency change is possible with this value). Should this optimum value of C14 be too high a percentage of C15, the tube selected will more than handle the maximum desired frequency swing, and consequently, C14 can be reduced or the maximum swing can be reduced. If, on the other hand, the optimum value of C14 is too small a percentage of C15, the oscillator must be re-designed, using a smaller C15 and a larger inductance.

Assuming—as a design example—that a 12AV6 diode section is to be considered as a control tube along with

a master oscillator triode section operating at a frequency of 1,000 cycles per second, without drawing appreciable diode current the average diode resistance as a result of audio signal being applied from the tank circuit through C14 is about 40,000 ohms. In order, then, for the reactance of C14 to equal 40,000 ohms, C14 should be about 0.0047 microfarad. This means that C15 should be approximately four times as much, or approximately .018 microfarad. The oscillator inductance L1 can be designed now to provide the proper frequency. In the plate lead of the control tube, resistor R33 should approximate 200,000 ohms so that its resistance will not shunt the diode impedance appreciably. R32 must not be less than 200,000 ohms for the same reason and preferably should approximate no less than one-half megohm. The audio input on the diode as applied through C14 should be great enough to bias the diode to approximately 40,000 ohms of impedance, and the vibrato signal as applied through resistor R32 should be great enough to swing the diode impedance from approximately 15,000 ohms to 100,000 ohms for maximum vibrato, and less swing if desired.

The values given in the example above are intended to point out the approximate design only. In construction, it is not necessary to design closely. To come somewhat near a design value usually is quite satisfactory. It is to be understood that while I have described an inductance capacitance tone generating system, any well known capacitance resonant oscillator circuit or functional equivalent thereof may be employed.

While I have shown a diode D as an integral part of an oscillator tube 2, it is to be understood that separate envelopes may house the triode and diode.

It is also understood that at point Y other generators of the equitempered scale, in addition to tone signal generator oscillator 1, may be attached to the vibrato system described above.

It is further understood that this invention is not to be limited to oscillators alone, but that at coupling point C80 cascaded followers may be connected in circuit as in the Larsen et al. Patent No. 2,568,644.

An additional feature of my invention is a manually actuable tuning means comprising a biasing arrangement consisting of a variable resistor R_x connected between a source of plus biasing potential B+ and minus biasing potential B—, which source is connected to point P2 by means of switch S which is adjustable at will for controlling the overall pitch of the instrument.

The value of said manual tuning means is appreciated when considering that, in most instances, other generators of the equitempered scale will be tied into point Y and that in some installations a quick sharpening or flattening of the overall pitch level with respect to the scale A440 may be desired. In that case, the operator may readily actuate switch S and by selective adjustment of variable resistor R_x, can either raise or lower the overall pitch as need therefor is required.

What I claim as my invention is:

1. In an organization of the class and for the purpose described, an inductance-capacitance resonant circuit; a tone signal generator having a signal output path, the frequency of said resonant circuit determining the resonant frequency of said tone signal generator; an oscillator operating at a vibrato frequency, a source of B+ potential, a diode connected thereto and biased thereby, means coupling the output of said oscillator to said diode, a capacitor, said diode and said capacitor connected in series and shunted across said resonant circuit so that said diode forms an impedance which is alternately variable with the output of said oscillator to alternately cause variations in the effectiveness of said capacitor and production of a vibrato effect to the signal in the output path of said generator.

2. In an organization of the class and for the purpose described, a capacitance resonant circuit; a tone signal

generator having a signal output path, the frequency of said resonant circuit determining the resonant frequency of said tone signal generator; an oscillator operating at a vibrato frequency, a source of B+ potential, a diode connected thereto and biased thereby, means coupling the output of said oscillator to said diode, a capacitor, said diode and said capacitor connected in series and shunted across said resonant circuit so that said diode forms an impedance which is alternately variable with the output of said oscillator to alternately cause variations in the effectiveness of said capacitor and production of a vibrato effect to the signal in the output path of said generator.

3. In an organization of the class described, an inductance capacitance resonant circuit; a tone signal generator having a signal output path; the frequency of said resonant circuit determining the resonant frequency of said tone signal generator; an oscillator operating at a vibrato frequency; a source of B+ potential, a diode connected thereto and biased thereby; means coupling the output of said oscillator to said diode; a capacitor; said diode and said capacitor connected in series and shunted across said resonant circuit so that said diode provides an impedance which is alternately variable with the output of said oscillator to thereby cause alternate variations in the effectiveness of said capacitor with resultant production of a vibrato effect to the signal in the output path of said generator, and means connected in circuit with said diode for manually biasing said diode.

4. In a vibrato, a tone frequency oscillator comprising a resonant circuit producing output oscillations of a given frequency; a self-biasing capacitative-resistive impedance circuit having therein a diode, said capacitative-resistive circuit comprising a resistance to ground from the plate of said diode and a condenser coupling said plate to said resonant circuit; and a source providing oscillations at a given vibrato rate, said source coupled to the plate of said diode by a resistance for alternating changing the impedance of said capacitative-resistive circuit to vary the frequency of oscillation of said tone frequency oscillator at said vibrato rate.

5. A vibrato according to claim 4, wherein resistive-pitch changing means including a source of potential is connected in circuit with said diode for changing the frequency of oscillation thereof for production thereby of oscillations corresponding to a musical tone of any desired pitch.

References Cited in the file of this patent

UNITED STATES PATENTS

2,401,372	Rienstra	June 4, 1946
2,568,644	Larsen et al.	Sept. 18, 1951

OTHER REFERENCES

Radio-Electronics, Dec. 1949, page 33, "New Electronic Music Vibrato Circuit."