Jan. 1, 1935. F. W. BARKLEY 1,986,671

SHEET HANDLING MACHINE

Filed Aug. 13, 1932 3 Sheets-Sheet 1

Fig. 1.

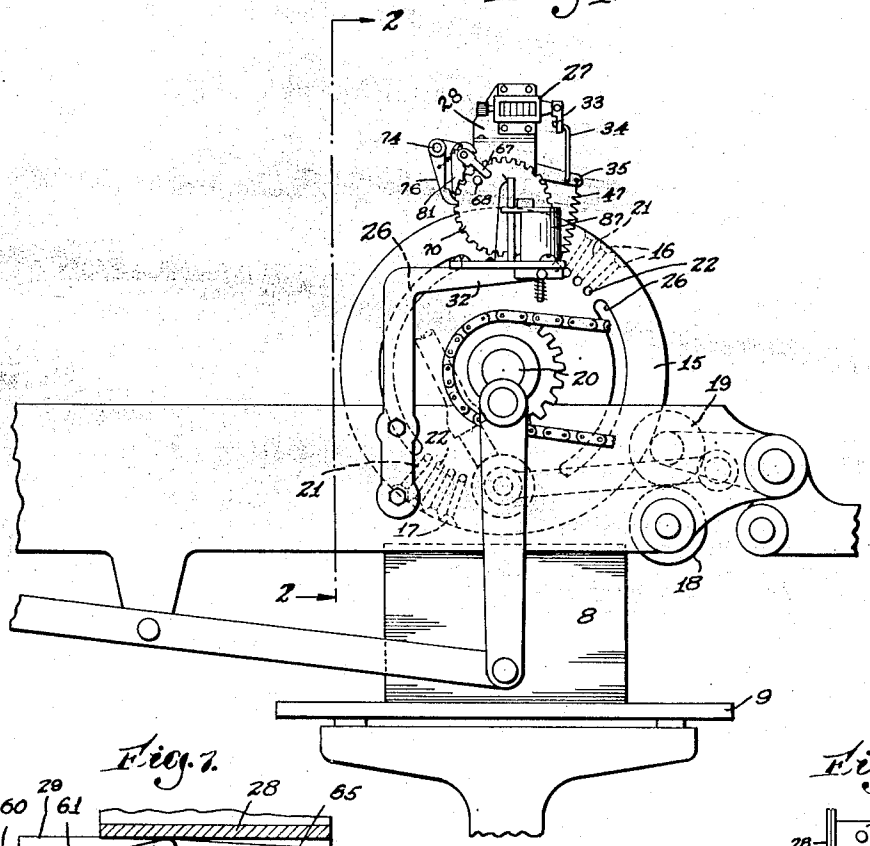


Fig. 7.

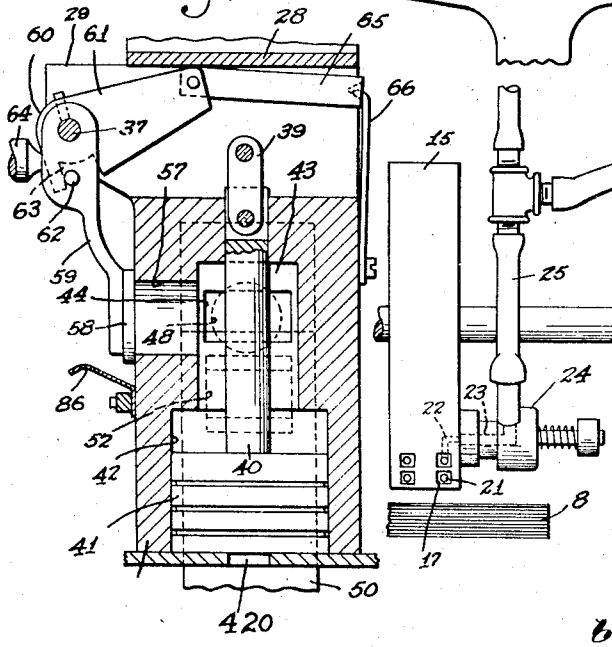


Fig. 2.

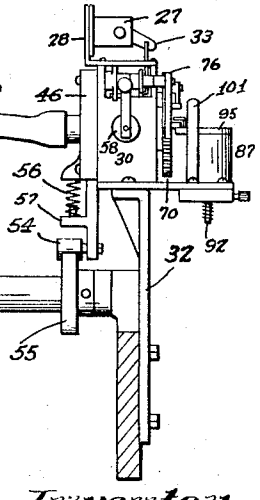


Inventor.
Fred W. Barkley
by Charles W. McDermott
his attorney

Jan. 1, 1935. F. W. BARKLEY 1,986,671

SHEET HANDLING MACHINE

Filed Aug. 13, 1932 3 Sheets-Sheet 2

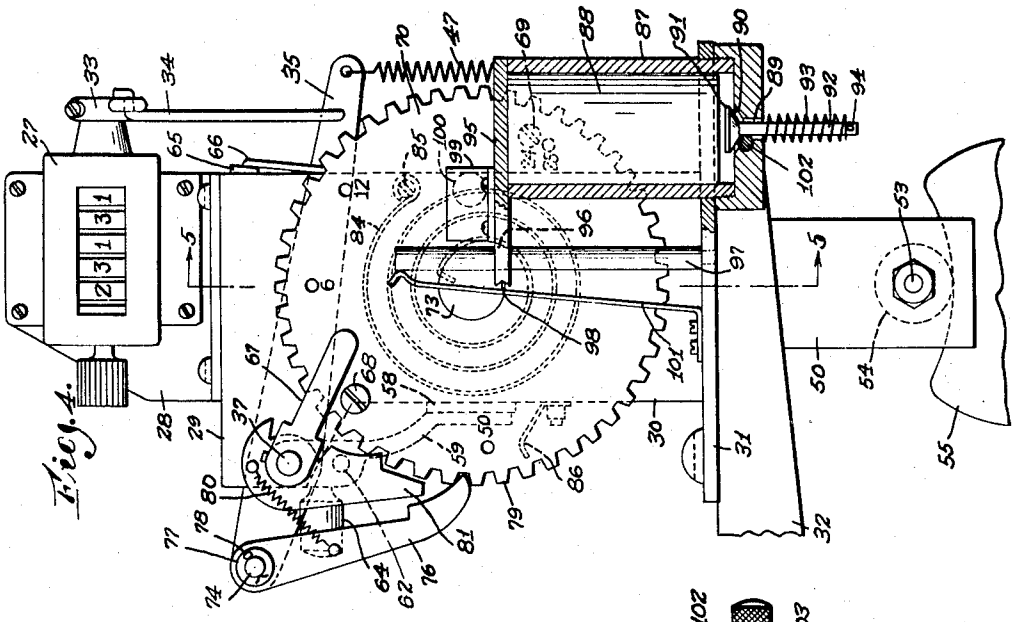

Fig. 4.

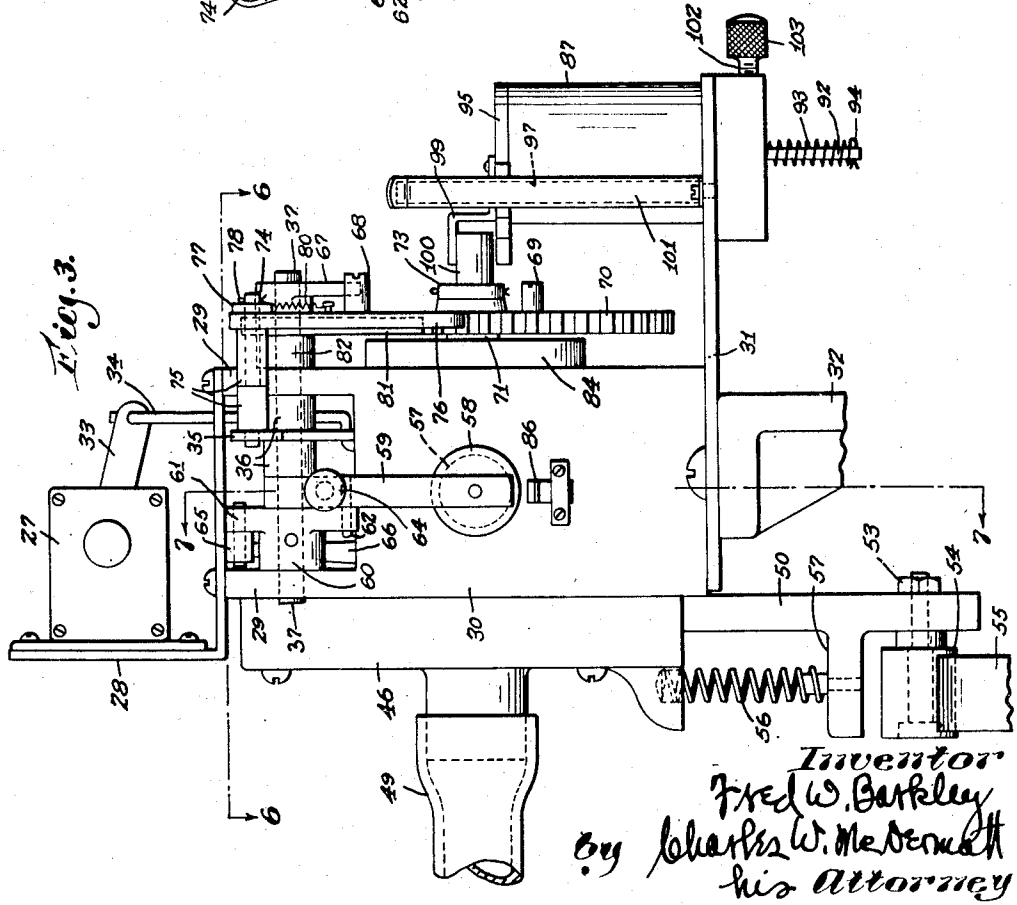

Fig. 3.

Inventor
Fred W. Barkley
by Charles W. McDermott
his Attorney

Jan. 1, 1935. F. W. BARKLEY 1,986,671

SHEET HANDLING MACHINE

Filed Aug. 13, 1932 3 Sheets-Sheet 3

Fig. 6.

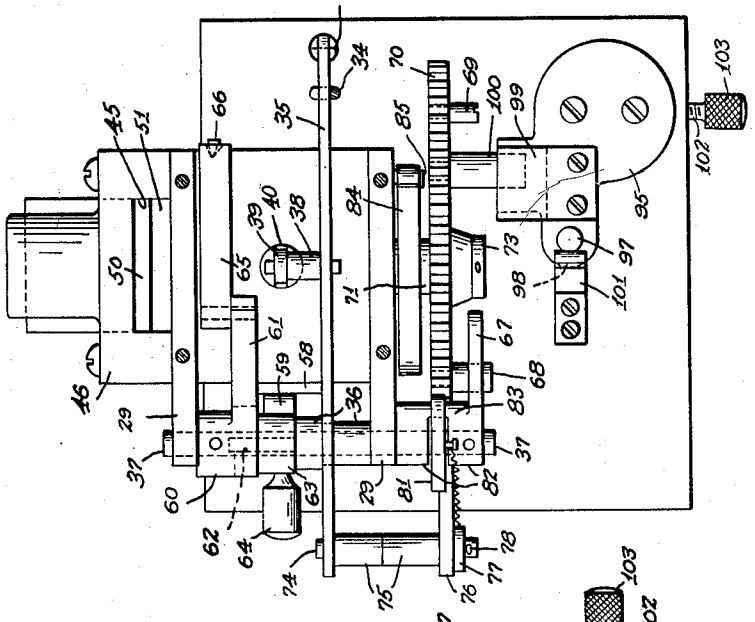

Fig. 5.

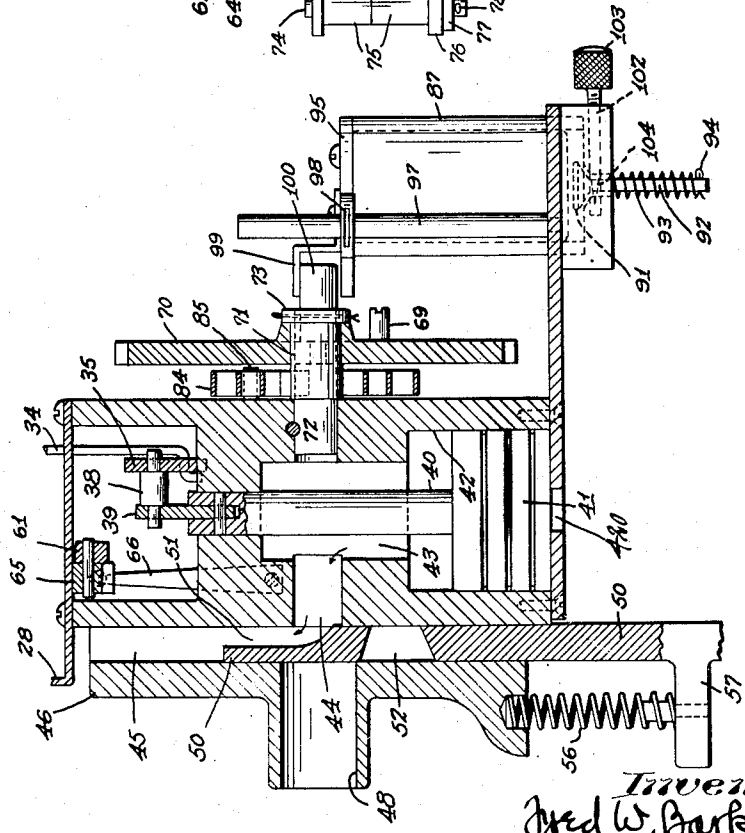

Inventor
Fred W. Barkley
by Charles W. McDermott
his Attorney

Patented Jan. 1, 1935 1,986,671

# UNITED STATES PATENT OFFICE

1,986,671

## SHEET HANDLING MACHINE

Fred W. Barkley, Winthrop, Mass.

Application August 13, 1932, Serial No. 628,707

15 Claims. (Cl. 93—93)

The present invention relates to machines for handling sheets, such for instance, as paper, in the printing industry.

Heretofore in the printing industry, and particularly in job work, it has been necessary to employ operatives to count out from the succession of sheets delivered by the various machines a number of sheets which are bunched and then shipped to separate localities. Usually these bunches contain a predetermined number, or a multiple thereof.

One object of the present invention is to produce a sheet handling machine which will deliver the sheets in bunches each containing the selected predetermined number and thus enable an operative to pick up the bunches for packing and shipping without being obliged to count the number of sheets for a bunch.

Another object of the present invention is to produce a sheet handling machine which will count in a reliable and certain manner the total number of sheets handled.

To the accomplishment of these objects, and such others as may appear hereinafter, the features of the invention relate to certain devices, combinations and arrangements of parts hereinafter described and then set forth broadly and in detail in the appended claims which possess advantages readily apparent to those skilled in the art.

The various features of the present invention will be readily understood from an inspection of the accompanying drawings illustrating the best form of the invention at present known to the inventor, in which,

Figure 1 is a detail view in elevation of a sheet feeding machine, the delivery or front end of the machine being at the right;

Fig. 2 is a detail view in rear sectional elevation on the line 2—2, Fig. 1;

Fig. 3 is a detail view in rear elevation of the counter and the mechanism for rendering the sheet feeding device inactive and reactive;

Fig. 4 is a detail view in right side elevation of the parts shown in Fig. 3, the dash pot being shown in section;

Fig. 5 is a detail view in sectional elevation on the line 5—5, Fig. 4;

Fig. 6 is a detail view in sectional plan on the line 6—6, Fig. 3, and

Fig. 7 is a detail view in sectional elevation on the line 7—7, Fig. 3.

For the purposes of disclosure the various features of the present invention are shown as embodied in a paper feeder, but it will be apparent to those skilled in the art that these features have utility in connection with other types of sheet handling machines.

In the illustrated embodiment of the invention the sheets to be delivered by the machine are stacked and then mounted in a pile 8, (Figs. 1 and 2), upon a platform 9 (Fig. 1) which may be elevated to maintain the uppermost sheet in the pile, as it is depleted, substantially in the same plane, by the automatic mechanism disclosed in my application Serial No. 413,023, filed December 10, 1929. When the uppermost sheet in the pile has been separated therefrom in the usual manner the separated sheet is acted upon by a suction drum 15 (Figs. 1 and 2) which rotates constantly about a fixed axis in a contra-clockwise direction and delivers the separated sheet from the machine either to a delivery board or to some other machine.

The drum may, as explained in the application hereinbefore referred to, operate to feed the sheets continuously or periodically. For convenience in disclosure herein the drum is illustrated and described as being operated to feed the sheets periodically.

To this end the drum is provided at one portion of its periphery with an arcuate series of suction mouths 16 and at the diametrically opposite portion of its periphery with another arcuate series of suction mouths 17. These mouths operate successively on the pile to pull two sheets therefrom in each cycle of rotation of the drum 15 and carry them to a pull-off roll 18 and rubber-covered spools 19 arranged above the pull-off roll 18 and cooperating therewith to complete the feeding movement of the sheets and carry them either into the machine with which the feeder is associated or upon a delivery board.

The drum 15 is secured to a shaft 20 the opposite ends of which are journaled in the machine frame. The shaft 20 is driven from some suitable source of power to rotate the drum 15 in a contra-clockwise direction, (Fig. 1).

The suction mouths 16 and 17 are arranged at regular intervals and are connected, respectively, by passages or ducts 21 and with lateral ports 22 which are adapted, during the rotation of the drum 15, to be brought successively into register with an inlet 23 (Fig. 2) of an air arm 24 connected to a vacuum conduit system 25. The drum 15 is provided also with two curved slots 26, arranged in circular alignment with the series of ports 22, adapted to be brought successively into register with the inlet 23 for destroying the vacuum during portions of the revolution of the drum.

In order to count the number of sheets fed from the pile by the drum 15 the machine is provided with a counter 27 (Figs. 1, 2, 3 and 4) of usual construction, which is secured to an up-turned portion of a plate 28 carried by brackets 29 integral with and projecting upwardly from a cylinder 30. The cylinder 30 is supported by a flat plate 31 carried by a bracket 32 projecting upwardly from the machine frame.

In order to operate the counter 27 its shaft is provided with an arm 33 (Figs. 3 and 4) which is connected by a rod 34 to one end of a lever 35 the hub of which is mounted to rock between collars 36 (Fig. 3), on a rock-shaft 37, journaled in the brackets 29. Intermediate its ends the lever 35 is connected by a distance-piece 38 (Figs. 5 and 6) with the upper end of a short link 39 pivotally connected to one end of a rod 40. The other end of the rod 40 is connected to a piston 41 mounted to reciprocate in a chamber 42 formed in the cylinder 30.

As shown in Fig. 5 the bottom of the chamber 42 is normally open to the atmosphere through a small opening 420. The upper part of the chamber is open normally to the atmosphere through a passage 43, a port 44 and a passage 45 formed between the cylinder 30 and a channel plate 46 secured thereto. With this construction the piston 41 is normally held at the bottom of the chamber 42 by a coiled spring 47 (Fig. 4) one end of which is anchored to a stationary part and the other end of which is connected to one end of the lever 35. The cover-plate 46 is provided with a passage 48 (Fig. 5) which is connected to the vacuum conduit system 25 through a hose 49, (Fig. 2).

In order to connect the chamber 42 to the vacuum system 25 during the time that the suction mouths 16 and 17 are in registry with the inlet 23 and to disconnect the chamber 42 from the vacuum system 25 during the time that the slots 26 are in registry with the inlet 23, the cover-plate 46 houses a slide-valve 50, (Fig. 5). The slide-valve 50 is provided with a port 51 which connects the port 44 and the passage 45 during the time the slots 26 are in registry with the inlet 23 and a port 52 which connects the port 44 and the passage 48 during the time the suction mouths 16 and 17 are in registry with the inlet 23.

The bottom of the slide-valve 50 is provided with a lateral stud 53 (Figs. 3 and 4) bearing a roll 54 which rides on the periphery of a double-cam 55 carried by the shaft 20. The roll 54 is maintained in engagement with the cam 55 by a coiled spring 56 which is interposed (Fig. 5) between a lateral extension 57 on the slide-valve 50 and the bottom of the cover-plate 46.

The cam 55 is constructed to reciprocate the slide-valve 50 twice in each rotation of the shaft 20 to register the port 52 with the port 44 and the passage 48 each time the suction mouths 16 and 17 register with the inlet 23. The chamber 42 is thus placed in communication with the vacuum conduit system 25 each time a sheet is fed. With this construction the piston 41 is elevated every time a sheet is fed thereby imparting a counting stroke to the counter. If, at the time the chamber 42 is placed in communication with the vacuum conduit system 25, the drum should fail for some reason to feed a sheet, the vacuum in the system 25 is destroyed and no movement is imparted to the piston. Thus, the counter 27 operates only when a sheet is fed. As soon as the counter operates to register the feeding of the sheet the slide-valve 50 is reciprocated by the cam 55 to disconnect the chamber 42 from the conduit system 25 and open the chamber 42 to the atmosphere, thus placing the piston 41 under the influence of the spring 47 which returns it to the position of Fig. 5.

In order to cause the machine to deliver the sheets in bunches each containing a predetermined number of sheets, means is provided for rendering the drum 15 inactive after it has fed the predetermined number of sheets and for rendering the drum reactive after it has remained inactive for a predetermined interval.

To this end the cylinder 30 is provided with a passage 57 (Fig. 7) the ends of which terminate in the atmosphere and the passage 43, respectively. The atmosphere end of the passage 57 is closed normally by a valve 58 carried by the free end of an arm 59 which is loosely pivoted on the rock-shaft 37 between one of the collars 36 and the hub 60 of an arm 61 pinned to the rock-shaft. As shown in Fig. 7 the arm 59 is provided with a lateral pin 62 which travels in a slot 63 formed in the hub 60. The valve 58 is maintained closed normally by a weight 64 on the back of the arm 59 and by a toggle comprising the arm 61 and a link 65 pivoted at one end thereto. The other end of the link 65 is engaged by the free end of a dead-beat spring 66 secured at its other end to the cylinder 30. As shown in Figs. 3 and 7 the movement of the toggle into its broken position is limited by the plate 28.

With this construction the valve 58 is normally maintained closed so that the drum 15, through the action of the vacuum conduit system, may feed from the pile singly a plurality of sheets, two for each rotation of the drum. Now if after the drum has fed from the machine a predetermined number of sheets the valve 58 is opened, the vacuum will be destroyed thus suspending the action of the drum in feeding the sheets until the valve is reclosed. As the delivery board of the machine to which the feeder delivers sheets is provided with feeding tapes the result of rendering the drum inactive for an interval and for rendering the drum reactive after it has been inactive for an interval is the production of separated groups or bunches of sheets each containing the predetermined number.

In order to open the valve 58 after the drum has fed the predetermined number of sheets one end of the rock-shaft 37 is provided with an arm 67 (Figs. 3 and 4) extending into the path of movement of a pair of pins 68 and 69 laterally projecting from a ratchet wheel 70. The ratchet wheel 70 is mounted on a sleeve 71 (Fig. 5) which rotates loosely on a stud 72 projecting from and pinned to one wall of the cylinder 30. The sleeve 71 is interposed between the adjacent wall of the cylinder 30 and collar 73 pinned to the free end of the stud 72.

The ratchet wheel 70 is rotated in a contra-clockwise direction, viewing Fig. 4, each time a sheet is fed by the drum 15. One end of the lever 35 is provided with a lateral pin 74 (Fig. 6) upon which are mounted two distance pieces 75 and a pawl 76 (Figs. 4 and 6) which is held in position on the pin 74, between one of the distance pieces 75 and a washer 77, by a cotter pin 78. The pawl 76 is held in engagement with the ratchet teeth 79 on the wheel 70 by a coiled spring 80 one end of which is connected to the pawl and the other end of which is connected to a locking pawl 81 loosely mounted on the rock-shaft 37 between the yoked-arms 82 on the hub 83 of the arm 67. The locking pawl 81 holds the ratchet wheel 70 in

the position to which it has been moved by the pawl 76.

With this construction each time a sheet is fed by the drum 15 the lever 35 is swung, by the connections from the piston 41, to move the pawl 76 downwardly and thus rotate the wheel 70 one step in a contra-clockwise direction until the pin 69 (Fig. 4) engages the arm 67 and swings it to the left, Fig. 4. Movement of the arm 67 to the left swings the rock-shaft 37 and makes the toggle comprising the arm 61 and the link 65. During this movement of the toggle the pin 62 is engaged by the other wall of the slot 63 and the valve 58 is opened to break the vacuum and suspend the feeding action of the drum 15. The valve 58 is held in an open position by the made toggle.

During the movement of the arm 67 to the left, Fig. 4, its hub 83 engages the pawl 81 and lifts it out of engagement with the teeth 79. During this movement of the pawl 81 it engages the pawl 76 and moves it out of engagement with the teeth 79. Thus, the wheel 70 is free to be rotated backwardly under the influence of a coiled spring 84 (Figs. 4 and 5) one end of which is secured to a pin 85 on the cylinder 30 and the other end of which is secured to the sleeve 71. Power, for returning the wheel 70 to its original position, was stored in the spring 84 during the rotation of the wheel 70 under the influence of the pawl 76.

Just before the return of the wheel 70 to its original position the arm 67 is engaged by the pin 68 and the shaft 37 is swung to break the toggle comprising the arm 61 and the link 65 until the other wall of the slot 63 engages the pin 62 and closes the valve 58 thus rendering the drum reactive to feed the sheets. During the breaking of the toggle the pin 62 is freed from the influence of either wall of the slot 63 and so to prevent the valve 58 from closing prematurely under the influence of the weight 64, the valve 58 is held open by a leaf spring 86 (Fig. 7) carried by the cylinder 30.

In order to control the time it takes for the wheel 70 to return to its original position and thus control the interval in which the drum 15 is inactive to feed the sheets, the plate 31 is provided with a dash pot (Figs. 4, 5, and 6) comprising the cylinder 87 and the piston 88. The bottom of the cylinder 87 is provided with a passage 89 one end of which forms a valve seat 90. Cooperating with the seat 90 is a valve 91 carried by one end of a stem 92 extending loosely through the passage 89. The valve 91 is pressed towards the seat 90 by a spring 93 coiled about the stem and interposed between the bottom of the cylinder 87 and a pin 94 on the bottom of the stem 92.

The top of the piston 88 is provided with a flat plate 95 having an offset hole 96 therein which receives a vertical post 97 rising from the plate 31. Adjacent the post 97 the plate 95 is provided with a notch 98 for a purpose presently to be described. The plate 95 supports a bent bracket 99 the free end of which, when the parts are in the position illustrated in Figs. 3 and 4, overrides a pin 100 projecting laterally from the exposed face of the ratchet wheel 70.

When the ratchet wheel 70 is rotated step by step to bring the pin 69 into engagement with the arm 67 and thus open the valve 58, the pin 100 through its engagement with the bracket 99 elevates the piston 88 until the pin 100 passes out from beneath the bracket 99. At that time the notch 98 is engaged with the bent end of a spring 101 secured to and projecting upwardly from the plate 31. When the valve 58 has been opened and the wheel 70 restored to the influence of the coiled spring 84 the spring 101 holds the piston 88 elevated. When the pin 100 returns to a position under the bracket 99 the strong spring 84 disconnects the notch 98 from the weaker spring 101 and the return of the wheel 70 to its original position is controlled by the movement of the piston 88 in the cylinder 87. This return movement of the piston 88 may be controlled as to duration through a screw 102 (Figs. 3 and 5) having a knurled head 103 on one end and a conical point 104 on the other end. The conical point 104 extends between the seat 90 and the valve 91. By manipulating the head 103 the amount the valve 91 is cracked open may be varied as desired. If the valve 91 is cracked open slightly the time the piston 88 takes to return to the bottom of the cylinder is prolonged. If the valve 91 is opened wide this time is shortened. Thus, by manipulating the head 103 the interval in which the feeding drum remains inactive may be varied as desired.

As indicated in Fig. 4 the wheel 70 is provided with a plurality of openings marked 6, 12, 24, 25 and 50, respectively. The pin 69 is shown in the opening marked 24 thus indicating that the drum 15 is rendered inactive after twenty-four sheets have been fed. By removing the pin 69 from the opening marked 24 and replacing the pin 69 in one of the other openings the number of sheets in the separated groups or bunches delivered from the machine may be varied.

Nothing herein explained is to be interpreted as limiting the invention in the scope of its application to use in connection with the particular apparatus or the particular mode of operation or both selected for purposes of illustration and explanation. While the particulars of construction herein set forth are well suited to one mechanical form of the invention, it is not limited to these details of construction, nor to the conjoint use of all its features, nor is it to be understood that these particulars are essential since they may be variously modified within the skill of the artisan without departing from the true scope of the actual invention, characterizing features of which are set forth in the following claims by the intentional use of generic terms and expressions inclusive of various modifications.

What is claimed as new, is:

1. In a sheet handling machine, the combination with rotary means for delivering the sheets, one at a time, out of the machine, and a counter for counting the number of sheets delivered, of suction means, controlled by each sheet for operating the counter.

2. In a sheet handling machine, the combination with a suction sheet delivering device for delivering the sheets, one at a time, out of the machine, a counter for counting the number of sheets delivered, and suction means for operating the counter, of means for correlating the operations of the delivering device and the suction means.

3. In a sheet handling machine, the combination with a suction sheet feeding device for feeding the sheets, one at a time, vacuum means for creating a suction in the device, a counter for counting the number of sheets fed, and mechanism, including a chamber normally open to the atmosphere, for operating the counter, of means for connecting said mechanism to the suction

means in timed relation to the operation of the feeding device.

4. In a sheet handling machine, the combination with a suction sheet feeding device for feeding the sheets, one at a time, vacuum means for creating a suction in the device, a counter for counting the number of sheets fed, a chamber normally open to the atmosphere, and a piston movable in the chamber for operating the counter, of a valve for connecting the chamber to the suction means, and a cam for operating the valve in timed relation to the operation of the feeding device.

5. In a sheet feeding machine, the combination with a sheet feeding device, of means controlled by the sheet for rendering said device inactive after it has fed a predetermined number of sheets.

6. In a sheet feeding machine, the combination with a sheet feeding device and means movable in one direction for rendering said device inactive after it has fed a predetermined number of sheets, of means movable in a direction different from that first named for automatically rendering said device reactive after it has remained inactive for a predetermined interval.

7. In a sheet feeding machine, the combination with a suction sheet feeding device, of means controlled by the sheet for rendering said device inactive after it has fed a predetermined number of sheets.

8. In a sheet feeding machine, the combination with a suction sheet feeding device and means movable in one direction for rendering said device inactive after it has fed a predetermined number of sheets, of means movable in a direction different from that first named for automatically rendering said device reactive after it has remained inactive for a predetermined interval.

9. In a sheet feeding device, the combination with a suction sheet feeding device and vacuum means for creating a suction in the device including an air port and a movable valve cooperating therewith for maintaining normally the vacuum, of means controlled by the sheet for operating the valve to destroy the vacuum after the feeding device has fed a predetermined number of sheets.

10. In a sheet feeding machine, the combination with a suction sheet feeding device and vacuum means for creating a suction in the device, including an air port and a movable valve cooperating therewith for maintaining normally the vacuum, and means movable in one direction for operating the valve to destroy the vacuum after the feeding device has fed a predetermined number of sheets, of means movable in a direction different from that first named for operating the valve to restore the vacuum after it has been destroyed for a predetermined interval.

11. In a sheet handling machine, the combination with means for delivering the sheets, one at a time, out of the machine, and a counter for counting the number of sheets delivered, of suction means operatively connected to the sheet delivering means for operating the counter.

12. In a sheet feeding machine, the combination with a suction sheet feeding device and means including a reciprocating member for alternately making and breaking the suction in said feeding device, of means including a valve for breaking the suction independently of said member to render the feeding device inoperative after it has fed a predetermined number of sheets.

13. In a sheet feeding machine, the combination with a suction sheet feeding device and means including a stationary member engaging the feeding device for establishing suction therein, of means spaced from said stationary member for rendering the feeding device inoperative after it has fed a predetermined number of sheets.

14. In a sheet feeding machine, the combination with a suction sheet feeding device and means including a reciprocating member for alternately making and breaking the suction in said feeding device, of means controlled by the sheet for breaking the suction independently of said member to render the feeding device inoperative after it has fed a predetermined number of sheets.

15. In a sheet feeding machine, the combination with a suction sheet feeding device and means including a stationary member engaging the feeding device for establishing suction therein, of means controlled by the sheet for rendering the feeding device inoperative after it has fed a predetermined number of sheets.

FRED W. BARKLEY.