April 14, 1931. F. W. MARSCHKE ET AL 1,800,307

SWING GRINDER

Filed Nov. 18, 1925 2 Sheets-Sheet 1

Fig. 3.

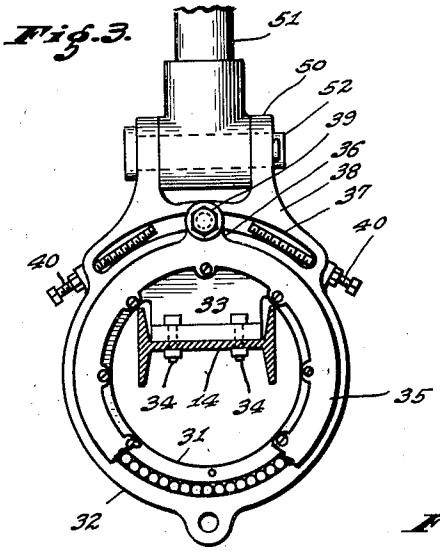

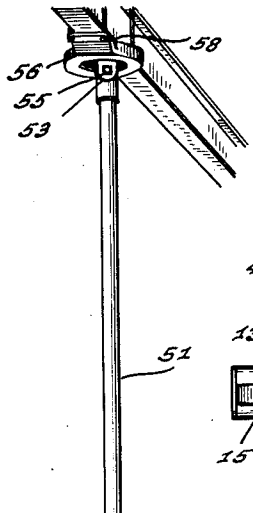

Fig. 5.

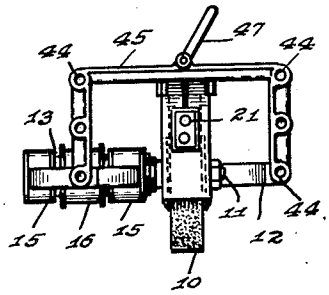

Fig. 1.

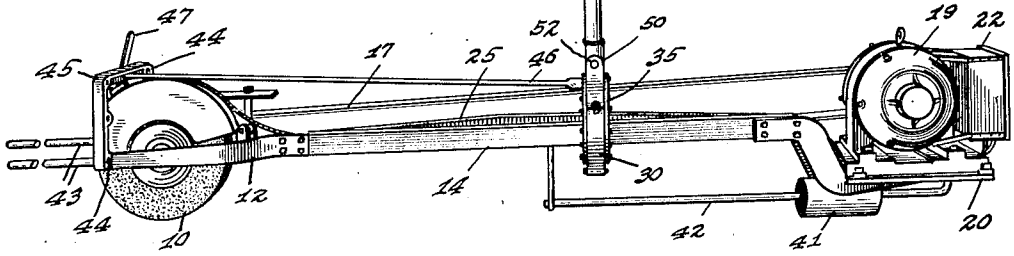

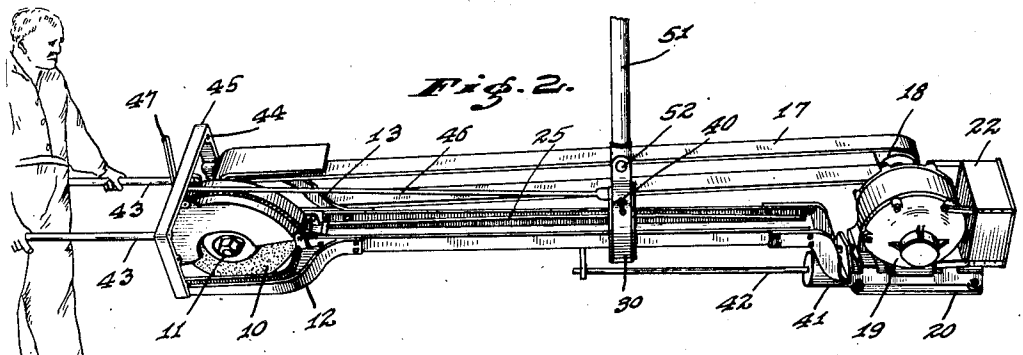

Fig. 2.

Fig. 4.

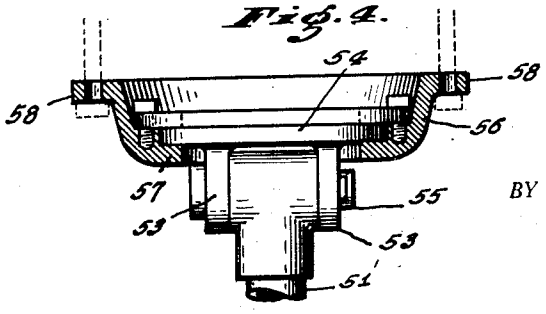

INVENTORS
FREDRICH W. MARSCHKE, AND
WILLIAM R. MARSCHKE,

BY

ATTORNEY.

April 14, 1931. F. W. MARSCHKE ET AL 1,800,307

SWING GRINDER

Filed Nov. 18, 1925 2 Sheets-Sheet 2

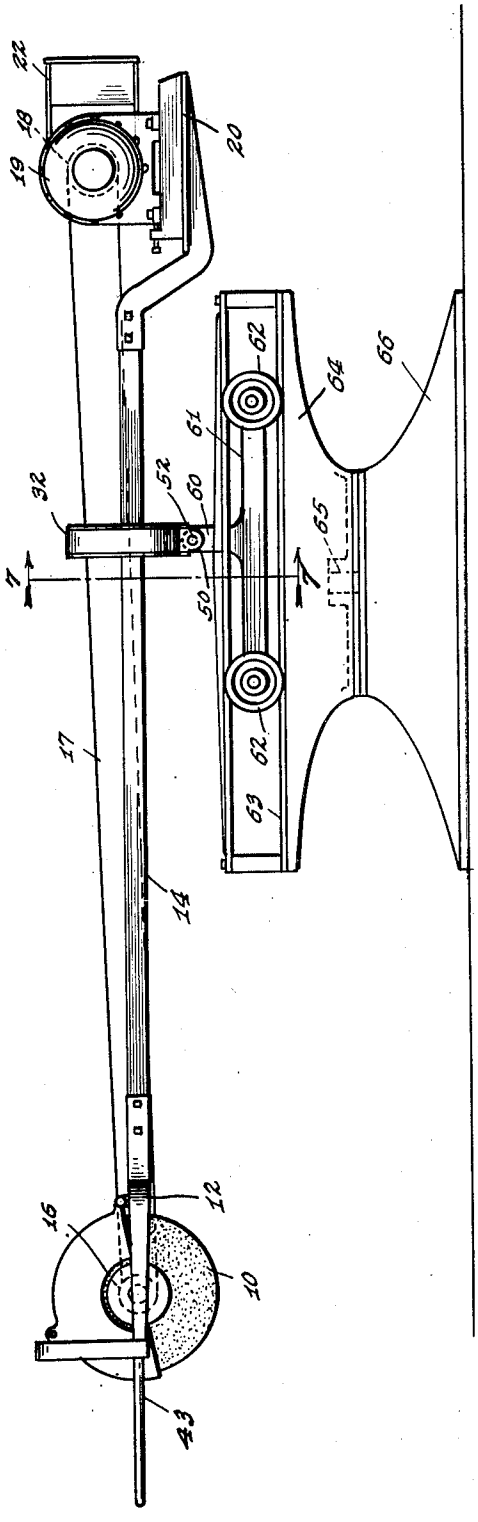

Fig. 6.

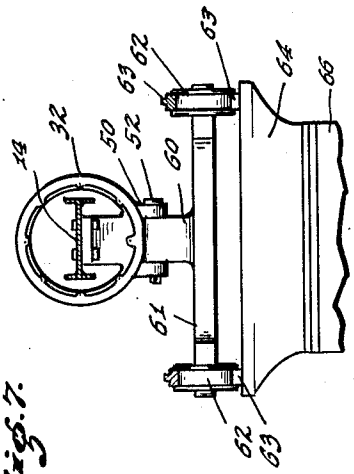

Fig. 7.

INVENTORS
FREDERICH W. MARSCHKE AND
WILLIAM A. MARSCHKE,

BY

ATTORNEY.

Patented Apr. 14, 1931 1,800,307

UNITED STATES PATENT OFFICE

FREDRICH W. MARSCHKE AND WILLIAM A. MARSCHKE, OF INDIANAPOLIS, INDIANA, ASSIGNORS TO MARSCHKE MANUFACTURING COMPANY, OF INDIANAPOLIS, INDIANA, A CORPORATION OF INDIANA

SWING GRINDER

Application filed November 18, 1925. Serial No. 69,725.

It is the object of our invention to make a high-duty swing grinder which is readily and easily adaptable to different characters of work, and is simple and easy to operate with a minimum of fatigue for the operator; to make such a swing grinder adjustable to different angles, with a maintenance of balance in all adjustments; and to provide a simple drive for the grinding wheel without any twisting of belts.

In carrying out our invention, we mount the grinding wheel on one end of a lever-frame, which carries at its other end the driving motor and is supported at an intermediate point so that the weight of the motor substantially counterbalances the weight of the grinding wheel; though we desirably provide a counterweight for getting the balance more accurately and to compensate for variations in the weight of the grinding wheel, as from wear and replacement. The motor is drivingly interconnected to the driving wheel by a driving connection, preferably a belt; and is maintained with its axis in fixed angular relation to the axis of the grinding wheel, so that such driving connection may not be interfered with, as by twisting if it is a belt. The lever-frame which carries both the grinding wheel and the motor is adjustable to various angular positions about its own axis, to tilt the plane of the grinding surface. The support by which the lever-frame is carried at its intermediate point includes a suitable bearing for permitting this adjustment of the lever-frame about its own axis, and a mounting for such bearing to permit it to have both a universal angular movement and a reciprocating movement, so that the operator at the grinding wheel may swing the wheel to and fro along the general line of the axis of the lever-frame, may raise and lower the grinding wheel as desired, and may swing the grinding wheel from side to side and even around in a complete circle when he so desires, and may do all this without twisting the driving belt.

The accompanying drawings illustrate our invention: Fig. 1 is a perspective side view of a swing grinder constructed in accordance with our invention and hung from the ceiling; Fig. 2 is also a perspective view of such swing grinder, slightly tilted about the axis of the lever-frame, and with only a part of the support shown; Fig. 3 is a transverse section through the lever-frame near the supporting bearing thereof; Fig. 4 is a vertical central section through the ceiling turntable shown in Fig 1; Fig. 5 is a front view of the swing grinder shown in Fig. 1; Fig. 6 is a side elevation of a swing grinder embodying our invention but supported from the floor below instead of from the ceiling above; and Fig. 7 is a section on the line 7—7 of Fig. 6.

The grinding wheel 10 is mounted on a shaft 11, desirably at one end thereof, and is located between two prongs 12 and 13 at one end of a lever-frame 14. The shaft 11 is mounted in two bearings 15 carried by the prong 13 but spaced apart therein to provide space between them for a driving pulley 16 which receives the driving belt 17. The driving belt 17 connects the pulley 16 to the pulley 18 on the shaft of a driving motor 19; which is carried by a shelf 20 provided at the other end of the lever-frame 14 from that at which the grinding wheel 10 is located. The motor 19 may be of any desired type, usually an electric motor, and controlled in any desired way, as by push-buttons 21 at the front end of the lever-frame 14 governing control mechanism located in a box 22 carried by the frame of the motor. Since such control mechanism comprises no part of the present invention, we have not attempted to show it. The motor 19 is desirably longitudinally adjustable on the shelf 20, to provide for tightening the belt.

The lever-frame 14 is conveniently made of an I-beam, laid on its side, with a reinforcing rib 25 extending along one of its sides; and the prongs 12 and 13 and the shelf 20 may be separate pieces, suitably attached, as by rivets, to the end of such I-beam.

The lever-frame 14 is supported at an intermediate point, so that it may be turned about its own axis, may be reciprocated in general along its own axis, and may have its

axis swung both up and down and sidewise with a universal movement. To this end, a ring bearing 30, shown as a roller bearing, surrounds the lever-frame 14, the rollers being located between inner and outer rings 31 and 32; and the inner ring 31 is rigidly attached to the lever-frame 14 at an intermediate point of the latter (Figs. 1 and 2) as by a single wide leg 33 which projects from the inner ring 31 against the web of the I-beam of the lever-frame 14 and is attached thereto by bolts 34. The outer ring 32 is suitably supported to give the reciprocating and the universal angular movements above referred to, by mechanisms which will be described later. The ring bearing 30—31—32 provides for turning the lever-frame about its own axis to any desired position, as is clear from Figs. 1 and 2, with a minimum of labor on the part of the operator.

The axial ends of the ring bearing may be closed by cover-rings 35, attached to the inner ring 31. These cover-rings 35 have ears 36 which project upward over an arc-shaped slot 37 provided in an upward extension 38 of the outer ring 32; and a clamping bolt 39 passing through such slots joins the ears 36 of the two cover-rings 35 to clamp them against the extension 38 to hold the inner and outer rings 31 and 32 in any desired angular relation to each other. If desired, stop-screws 40 may be mounted in the extension 38, to extend along the slot 37 from the ends thereof to provide limit-stops for the turning of the inner ring 31 relatively to the outer ring 32; so that the lever-frame 14 and the parts carried thereby may be returned exactly to a definite position about the axis of such lever-frame after having been moved from such position for any reason.

The location of the ring bearing 30—31—32 on the lever-frame 14 is such that such lever-frame and the parts carried thereby constitute a unit which is in substantial balance with respect to such ring-bearing. This balance is desirably provided both as between the two ends of the lever-frame, with the ring bearing as a supporting intermediate fulcrum, and also about the axis of the lever-frame so that there is substantially no tendency for such lever-frame to turn about its own axis by gravity. To this end, the shelf 20 is offset from the plane of the lever-frame 14 as a whole, to get the center of gravity of the motor and of the lever-frame substantially in the axis of the lever-frame; and the axis of the grinding wheel 10 desirably intersects the axis of the lever-frame. Further, to make up for wear and replacements of the grinding wheel 10, a counterweight 41 is mounted on a rod 42 extending longitudinally of the lever-frame beneath the motor end thereof, and is adjustable longitudinally of such rod 42 to produce the desired balance about the ring bearing as a fulcrum.

The balancing above referred to need not by any means be exact; but is merely a general balancing to relieve the strain on the operator, who operates the device as a whole by standing between handles 43 insertable in holes 44 in the sides of a yoke 45 joining the ends of the prongs 12 and 13; there usually being several such holes 44 in each side of the yoke 45 to permit inserting the handles 43 in different positions so that the two handles may be in substantially the same horizontal plane for different tiltings of the lever-frame and its carried parts about the axis of such lever-frame.

The yoke 45 may also provide a support for the front end of a long-shank socket-wrench 46 for operating the clamping bolt 39, the forward end of such socket-wrench being provided with an operating handle 47 in convenient proximity to the operator standing between the handles 43.

The mounting for the outer ring 32 of the ring bearing, to provide the reciprocating and the universal angular movements above referred to, may take different forms. We have shown one such form in Figs. 1 to 4 inclusive, and another form in Figs. 6 and 7.

In the arrangement shown in Figs. 1 to 4 inclusive, the extension 38 of the ring 32 has two upwardly extending ears 50 between which is located the lower end of a swing-rod 51 connected to such ears by a pivot-pin 52 transverse to the axis of the lever-frame 14 or parallel to the axes of the grinding wheel 10 and driving motor 19. The upper end of the swing rod 51 lies between two ears 53 depending from a turn-table plate 54 and is connected thereto by a pivot-pin 55 parallel to the pivot-pin 52. The two pivot-pins 52 and 55 permit the swinging of the device as a whole in the general line of the axis of the lever-frame 14, to produce the desired reciprocation of the grinder wheel 10 over the work being ground; and also permit the ready raising and lowering of the grinding wheel 10 as desired. The turn-table plate 54 is mounted within a ceiling-fitting 56, which has an inwardly projecting flange 57 at the bottom to support the edge of the turn-table plate, and outwardly projecting fingers 58 at the top for receiving attaching bolts by which such fitting is attached to the ceiling. This turn-table mounting permits the device as a whole to be turned about the axis of such turn-table; and with the two pivot-pins 52 and 55 provides for the universal angular movement of the lever-frame and for the reciprocation of the lever-frame as required by the nature of the work being ground.

In the arrangement shown in Figs. 6 and 7, the ring 32 is supported from the floor instead of from the ceiling, but is supported

to have the same general movement. To this end, the ring 32 may be turned around so that its ears 50 project downward to receive between them an upstanding supporting finger 60 which is connected to such ears by the pivot-pin 52 already described. The finger 60 is carried by a frame 61 supported on two pairs of flanged rollers 62 which travel in two parallel runways 63 extending along opposite sides of a turn-table 64 centrally mounted on a vertical pivot-pin 65 on a supporting pedestal 66 which rests on the floor. The runways 63 are shown as rectilinear runways, to provide a rectilinear reciprocation; but this rectilinear feature is not necessary. Each runway has upper and lower bars, between which the flanged rollers lie. The axis of the vertical pivot-pin 65 of the turn-table 64 is desirably about at the center of the figure formed by the rollers 62. The pivot-pins 52 and 65 and the roller mounting of the rollers 62 in the runways 63 in the arrangement shown in Figs. 6 and 7 provide the desired reciprocability of the grinding wheel along the general axis of the lever-frame and also for the universal angular movement of the lever-frame.

We claim as our invention:

1. In a swing grinder, a suspended annular bearing including outside and inside relatively rotatable members, a pin and slot connection between said members limiting the extent of their relative rotation, a frame extending through said bearing perpendicular to the plane of rotation thereof and supported by the inner member above the axis of said member, a grinding wheel at one end of the frame and a motor at the other, said wheel and motor being so disposed that a line drawn through their centers of mass passes through said frame at its place of intersection with said bearing, said pin slot connection including means for clamping said members in different relative angular positions and means for adjustably varying the length of said slot.

2. In a swing grinder, a suspended annular bearing including outside and inside relatively rotatable members, a pin and slot connection between said members limiting the extent of relative rotation thereof, a frame extending through said bearing perpendicular to its plane of rotation and supported by the inner member, a grinding wheel at one end of the frame and a motor at the other, said pin and slot connection including means for clamping said members in different relative angular positions, handles for tilting said frame, and a clamp operating handle for said pin and slot connection extending to a point adjacent said first mentioned handles.

3. In a swing grinder, a suspended annular bearing including outside and inside relatively rotatable members, a pin and slot connection between said members limiting the extent of relative rotation thereof, a frame extending through said bearing perpendicular to the plane of rotation thereof and supported by the inner member, above its axis, a grinding wheel at one end of said frame and a motor at the other, a bifurcated member adjacent said grinding wheel, bearings carried by the arms of said bifurcated member in which an extension of the shaft of said grinding wheel is journaled, a belt pulley carried by said shaft between said bearings, a belt connection between said pulley and said motor, said bifurcated member being offset sufficiently to cause said belt to clear said suspended annular bearing in all positions of rotation of the latter.

In witness whereof, we have hereunto set our hands at Indianapolis, Indiana, this 14th day of November, A. D. one thousand nine hundred and twenty-five.

FREDRICH W. MARSCHKE.
WILLIAM A. MARSCHKE.