No. 875,331. PATENTED DEC. 31, 1907.

A. J. DULL & J. WEATHERBY, Jr.

FURNACE FOR DESULFURIZING AND AGGLOMERATING ORES.

APPLICATION FILED FEB. 4, 1907.

2 SHEETS—SHEET 1.

FIG. 1

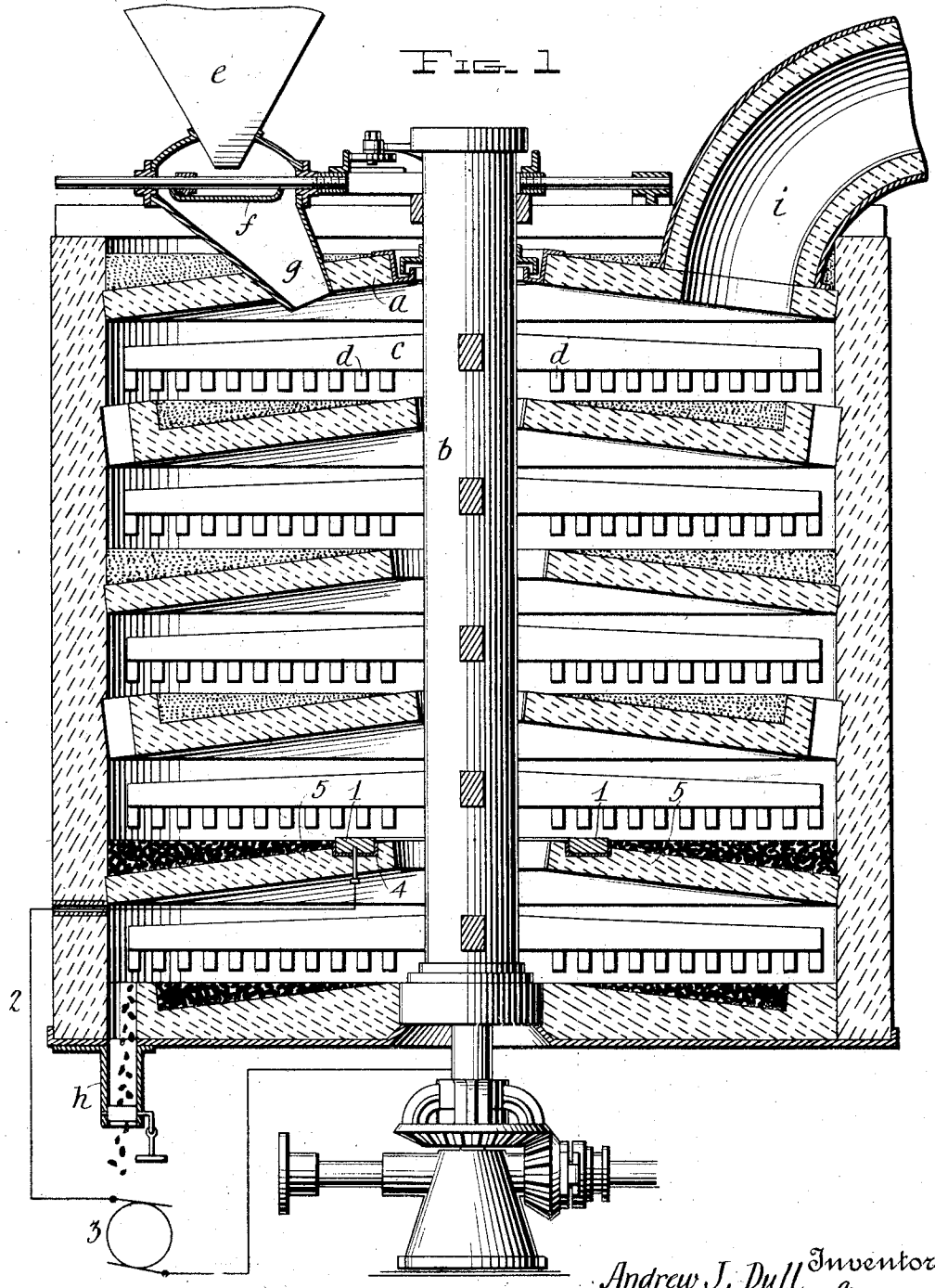

Witnesses
J. L. Gentrino
C. H. Griesbauer.

Andrew J. Dull Inventors
and
Joseph Weatherby, Jr.
by H. B. Willson & Co
Attorneys

No. 875,331. PATENTED DEC. 31, 1907.

A. J. DULL & J. WEATHERBY, JR.

FURNACE FOR DESULFURIZING AND AGGLOMERATING ORES.

APPLICATION FILED FEB. 4, 1907.

2 SHEETS—SHEET 2.

FIG. 2

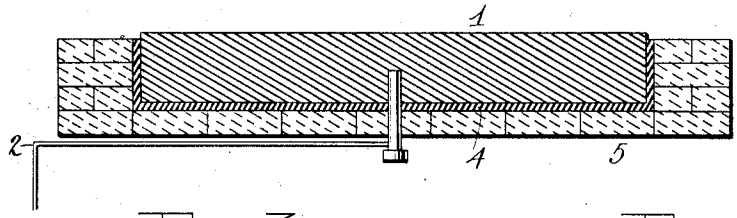

FIG. 3

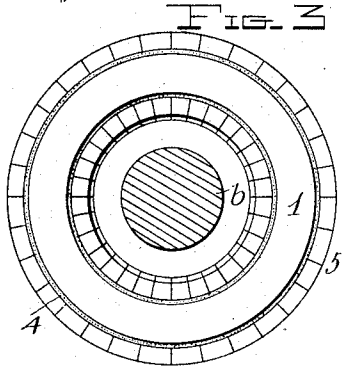

FIG. 4

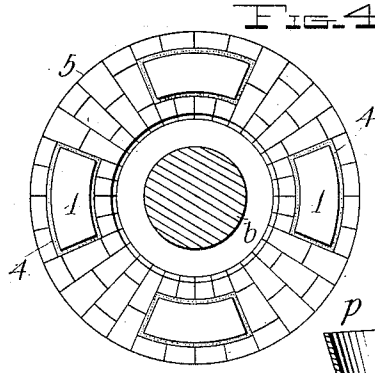

FIG. 5

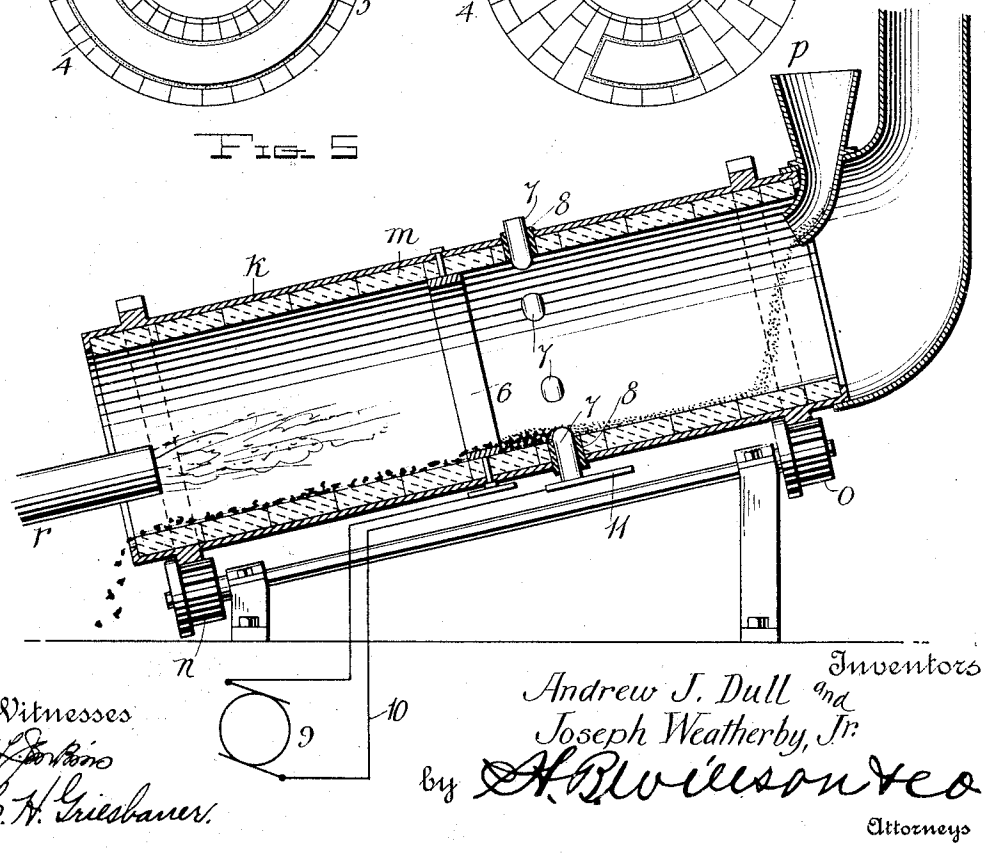

Witnesses
J. Perkins
C. H. Griesbauer.

Inventors
Andrew J. Dull and
Joseph Weatherby, Jr.
by A. B. Williamson & Co
Attorneys

UNITED STATES PATENT OFFICE.

ANDREW J. DULL, OF HARRISBURG, AND JOSEPH WEATHERBY, JR., OF NEW CUMBERLAND, PENNSYLVANIA; SAID WEATHERBY ASSIGNOR TO SAID DULL.

FURNACE FOR DESULFURIZING AND AGGLOMERATING ORES.

No. 875,331. Specification of Letters Patent. Patented Dec. 31, 1907.

Application filed February 4, 1907. Serial No. 355,691.

To all whom it may concern:

Be it known that we, ANDREW J. DULL, a citizen of the United States, residing at Harrisburg, in the county of Dauphin, State of Pennsylvania, and JOSEPH WEATHERBY, Jr., a citizen of the United States, residing at New Cumberland, in the county of Cumberland and State of Pennsylvania, have invented certain new and useful Improvements in Furnaces for Desulfurizing and Agglomerating Ores; and we do declare the following to be a full, clear, and exact description of the invention, such as will enable others skilled in the art to which it appertains to make and use the same.

Our invention relates to improvements in furnaces for desulfurizing and agglomerating comminuted iron ore to convert the same into a cinder, which may be subsequently treated in a blast furnace, and it consists in an ore roasting furnce having means to produce an electric arc, and means to expose the ore, after the same has been heated in the furnace, to the action of such electric arc.

Our invention further consists in an ore roasting furnace having means to produce an electric arc, and means to cause the ore, after the same has been in a heated condition and while it is heated, to pass between the electrodes of the arc for agglomeration thereby.

Our invention further consists in an ore roasting furnace having a moving element to set up motion in the ore heated in the furnace, and means to produce an electric arc, to the action of which the heated moving ore is exposed for agglomeration thereby.

Our invention further consists in an ore roasting furnace having a moving element to set up motion in the ore heated in the furnace, and electrodes, and means coacting therewith, to produce an electric arc, to the action of which the heated ore is exposed for agglomeration thereby, one of said electrodes being movable with reference to the other to break off the agglomerated mass formed between the electrodes in the arc, and remove said agglomerated mass from the sphere of action of the arc.

Our invention further consists in the construction, combination and arrangement of devices hereinafter described and claimed.

In the accompanying drawings,—Figure 1 is a sectional view of one type of a roasting furnace for desulfurizing and agglomerating iron ore, and embodying our improvements; Fig. 2 is a detail sectional view illustrating the construction of one of the electrodes; Fig. 3 is a detail top plan view of the same; Fig. 4 is a similar view showing a slightly different form of electrode; Fig. 5 is a sectional view of another type of furnace, embodying our improvements.

The furnaces hereinafter described are especially adapted for use in carrying out our improved process for desulfurizing and agglomerating comminuted iron ore, in which the ore is first heated to reduce the electrical resistance thereof and then exposed to the action of an electric arc to complete the desulfurizing thereof and cause said ore to be agglomerated or reduced to the condition of a cinder, the said process being fully described and claimed in an application Serial No. 355692 filed by us under date of Feb. 4, 1907.

Referring to the form of our invention, shown in Fig. 1, the furnace shown therein is in its general construction an ore roaster of the stirrer type, in which the ore, after it has been ground or comminuted, is fed by means of the hopper *e*, pan *f*, and chute *g* onto the uppermost of a series of roasting floors *a*. The ore on the said floors while heated and being heated in the furnace is thoroughly stirred and is caused to move by the action of the stirring-arms *c*, revolved by the shaft *b* in the furnace, said stirring-arms having teeth *d*, which in addition to stirring the ore on the floors while the major portion of the sulfur is being burned out therefrom, cause the ore to pass downwardly from floor to floor of the furnace and to be finally discharged from the furnace through the draw-off pipe *h*. The products of combustion escape from the furnace through the exit pipe *i* in the roof thereof.

In the embodiment of our invention we provide one or more electrodes 1, which are placed on one or more of the lower roasting floors *a*. These electrodes are connected by suitable conductors 2 to the negative pole of a generator, indicated at 3. The shaft *b* of the furnace is utilized as a conductor, and hence the teeth *d* of the stirring-arms revolved by the said shaft become electrodes,

which move over the electrodes 1 at a suitable distance therefrom. The interior of the furnace is heated by the usual means and in the usual manner, and combustion therein is maintained in the usual way, the heat being of such a degree as is sufficient to consume the major portion of the sulfur, but is insufficient to fuse the ore. Owing to the stirring action of the stirring-arms and fingers over the floors of the furnace, and the descent of the ore from floor to floor of the furnace, the major portion of the sulfur is removed from the ore before the ore reaches the floor or floors upon which the electrode or electrodes 1 is or are placed. The ore being thus heated in the furnace, its electrical resistance becomes greatly reduced, as we have discovered in the operation of our improved process. Owing to the reduced resistance of the ore, electric arcs are formed between the electrodes of the movable rakes or arms and the fixed electrodes 1, by a current or currents of high amperage but moderate voltage, passing through the ore and the ore while in this heated condition and in motion in the furnace is subjected to the action of such arcs, the heat of which is superadded to the heat caused by the combustion in the furnace, and the said arcs serve to still further reduce the percentage of sulfur in the ore and to partially fuse the ore, so that the same becomes agglomerated or formed into "cinders," which are usually hollow, vary in size from about that of a pea to about that of an egg, and which are of sufficient weight to be adapted to be finally treated in a blast furnace without danger of being blown out of the blast furnace by the force of the blast. Owing to the fact that each arc has an electrode which is movable in respect to and which moves past the other, the "cinder" or agglomerated mass of ore formed between two such electrodes becomes broken therefrom by the movement of the movable electrode, so that such cinder or agglomerated mass immediately after it has been formed is taken out of the sphere of action of the arc, and a portion of the ore is only momentarily exposed to the action of the electric arc. The ore thus "cindered" or agglomerated becomes discharged from the furnace through the draw-off pipe *h*. In practice, we have made the electrodes 1 of cast iron, of circular and segmental form, have embedded the same in asbestos, as at 4, and have further insulated the same by means of fire-brick 5, in which the asbestos has been embedded, so that only the upper surfaces of the electrodes 1 are exposed.

Referring to the modified construction shown in Fig. 5, the same in its general construction is substantially like an ordinary revolving cement furnace, in which the metallic cylinder *k* is supported in an inclined position, and is revolved by means of gears *n*, *o*. The ore is fed into the upper end of the furnace, as at *p*, and a jet of flame is supplied to the interior of the furnace through its lower end by a blast pipe *r*. In this furnace we provide an electrode 6, which is in the form of an iron ring placed in the furnace and insulated from the metallic cylinder *k* by fire-brick *m*. At a suitable distance in advance of the annular electrode 6 and spaced therefrom, we provide a number of electrodes 7, which project through and are insulated from the shell of the furnace, as at 8. One pole of the generator, indicated at 9, is connected to the annular electrode 6. The other pole thereof is connected by a conductor 10 to a contact device 11 with which the electrodes 7 successively make sliding contact as the furnace cylinder, which is the moving element of the furnace that imparts motion to the ore therein, revolves, so that an arc is established between each electrode 7 as it reaches the lower side of the furnace and the electrode 6, and hence the ore as it passes downwardly through the revolving furnace cylinder is exposed to the action of the electric arcs thus successively produced, and is agglomerated or "cindered" thereby as in the form of our invention shown in Fig. 1.

From the foregoing description, taken in connection with the accompanying drawings, the construction and operation of the invention will be readily understood without requiring a more extended explanation.

Various changes in the form, proportion and the minor details of construction may be resorted to without departing from the principle or sacrificing any of the advantages of this invention, as defined by the appended claims.

Having thus described our invention, what we claim as new and desire to secure by Letters-Patent, is,—

1. An ore roasting furnace having means for heating the ore to desulfurize the same, an electrode arranged in the furnace, a second movable electrode coöperating with the first-mentioned electrode to produce an electric arc to the action of which the heated ore is subjected, said movable electrode being adapted to move the agglomerated ore beyond the radius of action of the arc.

2. An ore roasting furnace having means for heating the ore to partially desulfurize the same, a pair of electrodes arranged in the furnace and movable one relative to the other, means coöperating with the electrodes to produce an electric arc to the action of which the heated ore is subjected, and further desulfurized, one of the electrodes being in the form of a separator for agitating the ore and for removing agglomerated ore out of the radius of action of the arc.

3. An ore roasting furnace having means

for heating the ore a moving element to set up motion in the ore heated in the furnace, electrodes, and means coacting therewith to produce an electric arc, to the action of which the heated ore is exposed, one of said electrodes being movable with reference to the other, for the purpose set forth.

In testimony whereof we have hereunto set our hands in presence of two subscribing witnesses.

ANDREW J. DULL.
JOSEPH WEATHERBY, JR.

Witnesses:
EDWARD M. WINTERS,
JOS. F. WEAVER.