July 27, 1965 M. CAMRAS 3,197,150

TRANSDUCER MACHINE AND SPOOL CONSTRUCTION THEREFOR

Filed July 11, 1960 5 Sheets-Sheet 1

Fig. 1

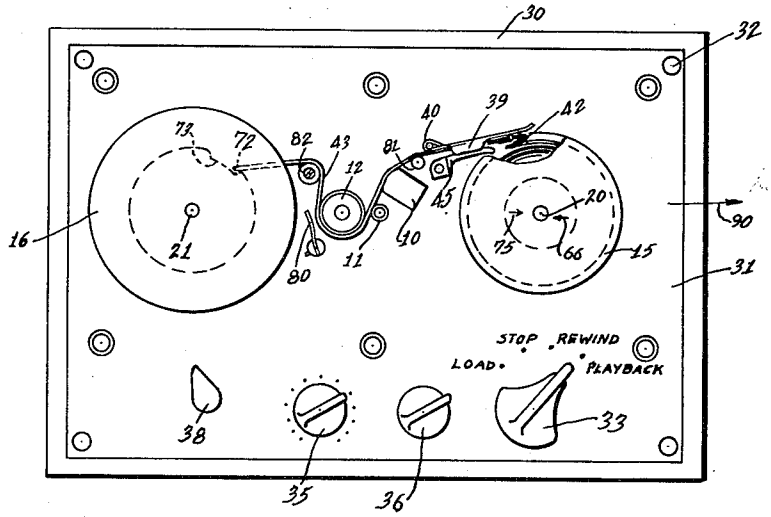

Fig. 2

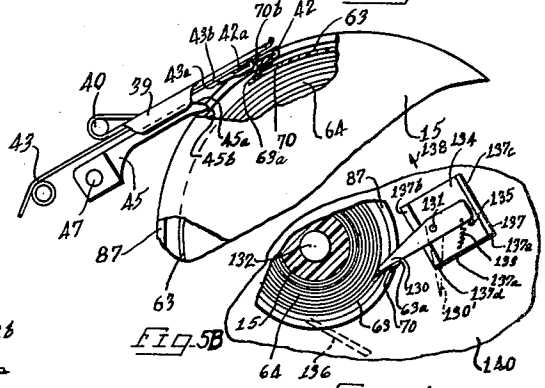

Fig. 3

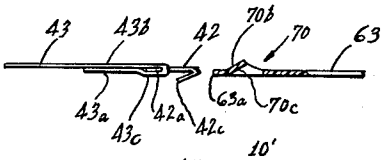

Fig. 6A

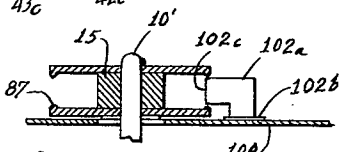

Fig. 5B

Fig. 6

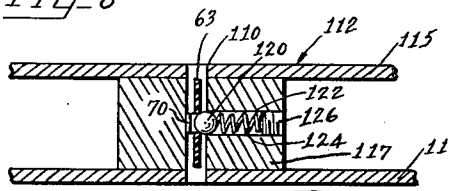

Fig. 4

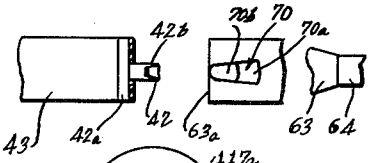

Fig. 5

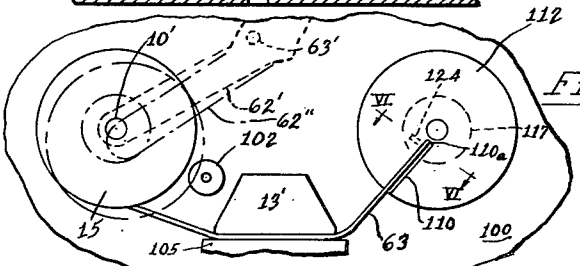

Fig. 5A

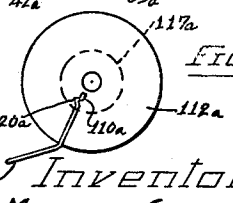

Inventor
Marvin Camras

by Hill, Sherman, Meroni, Gross & Simpson Attys.

TRANSDUCER MACHINE AND SPOOL CONSTRUCTION THEREFOR

Filed July 11, 1960 5 Sheets-Sheet 2

Fig. 7

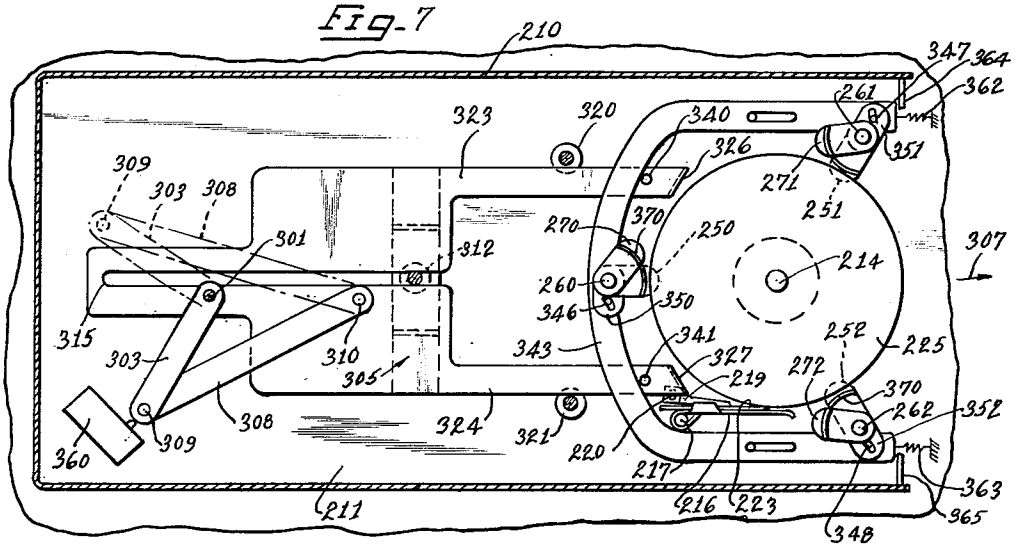

Fig. 8

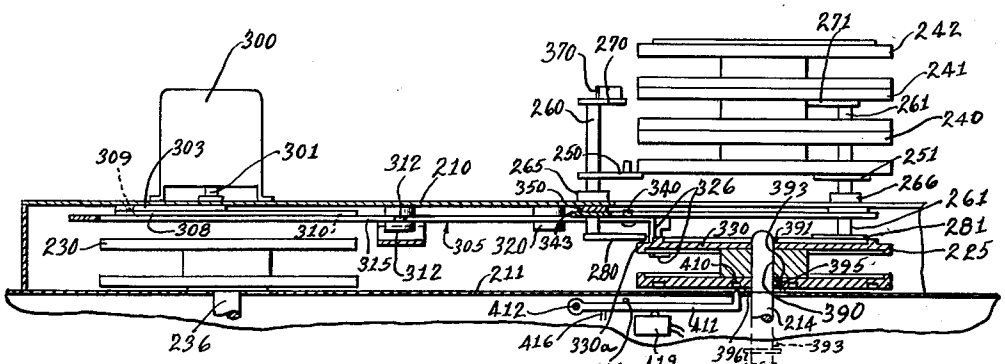

Fig. 9

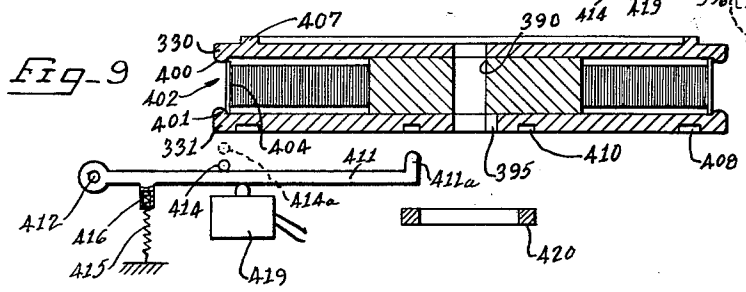

Inventor
Marvin Camras

Kiley, Sherman, Meroni, Gross & Simpson
Attys.

TRANSDUCER MACHINE AND SPOOL CONSTRUCTION THEREFOR

Filed July 11, 1960 5 Sheets-Sheet 3

Fig. 10

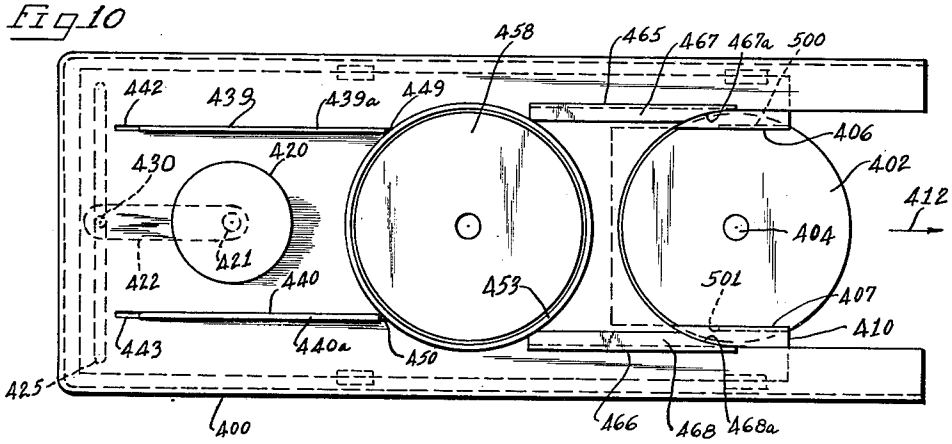

Fig. 11

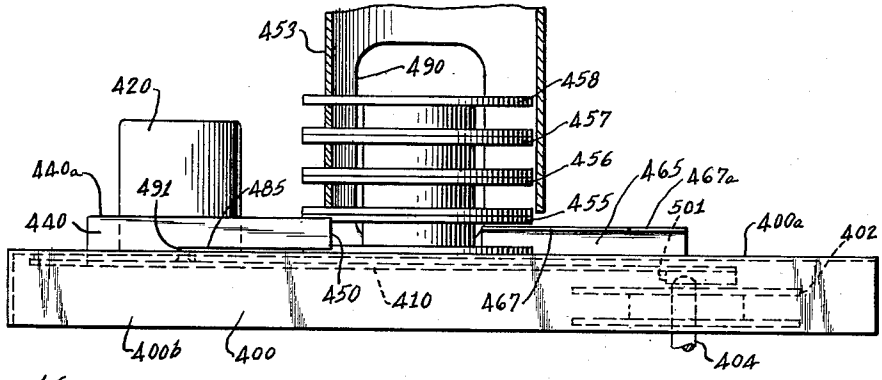

Fig. 16

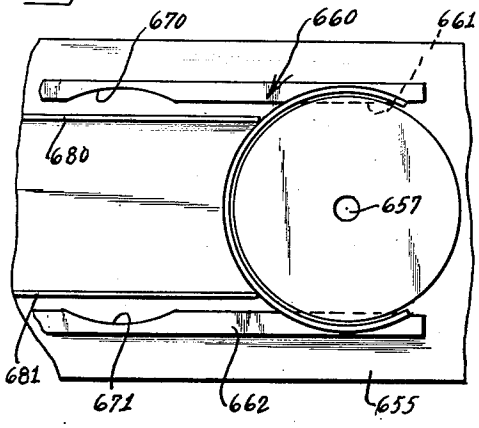

Fig. 17

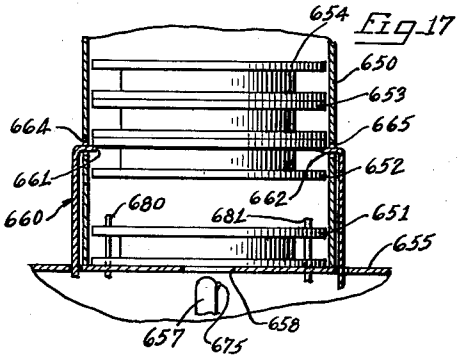

Inventor
Marvin Camras

by Kleiler, Sherman, Marone, Gross & Simpson Attys.

TRANSDUCER MACHINE AND SPOOL CONSTRUCTION THEREFOR

Filed July 11, 1960 5 Sheets-Sheet 4

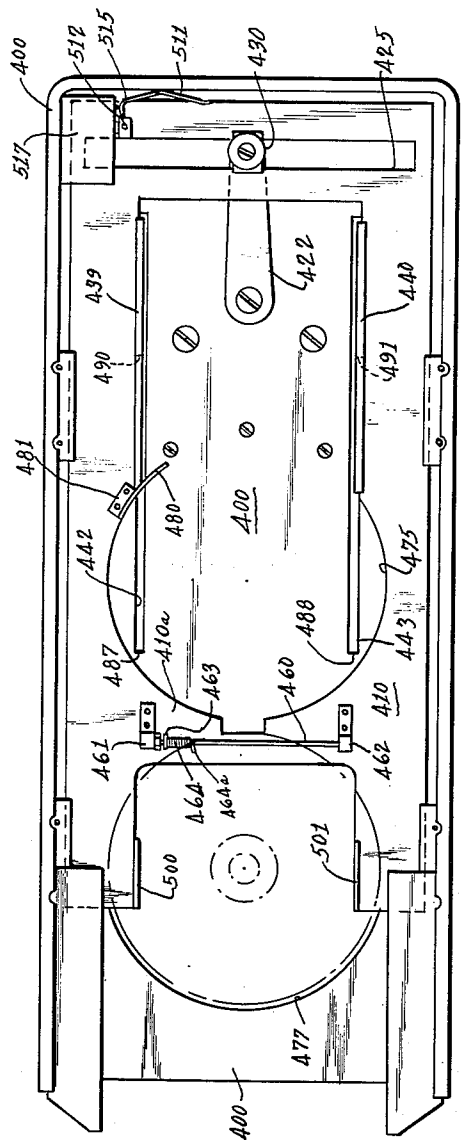

Fig-12

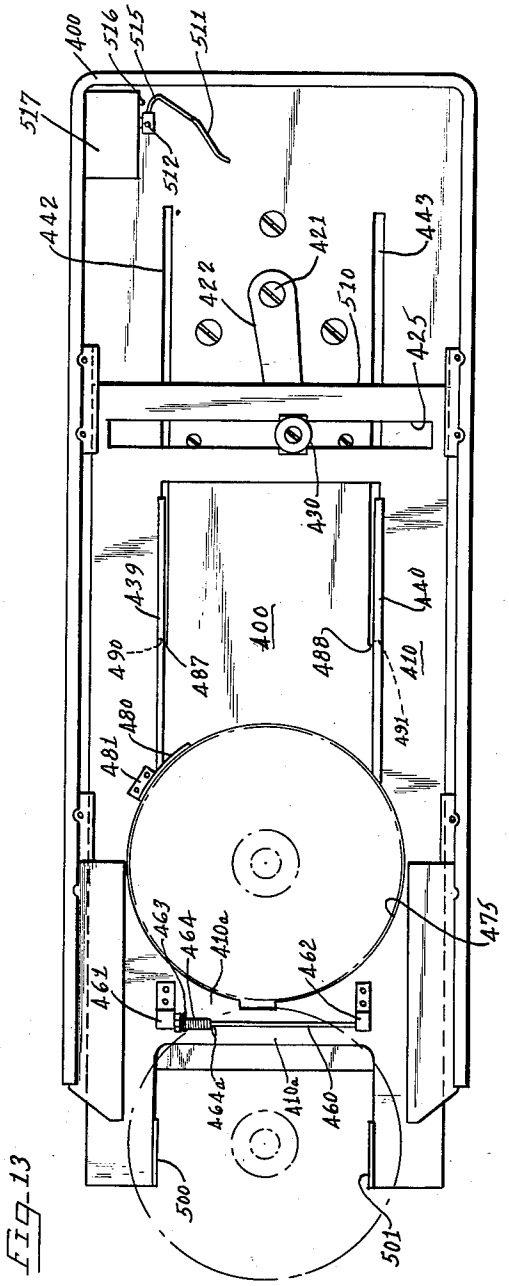

Fig-13

Inventor
Marvin Camras

by Hill, Sherman, Meroni, Gross & Simpson Attys.

TRANSDUCER MACHINE AND SPOOL CONSTRUCTION THEREFOR

Filed July 11, 1960 5 Sheets-Sheet 5

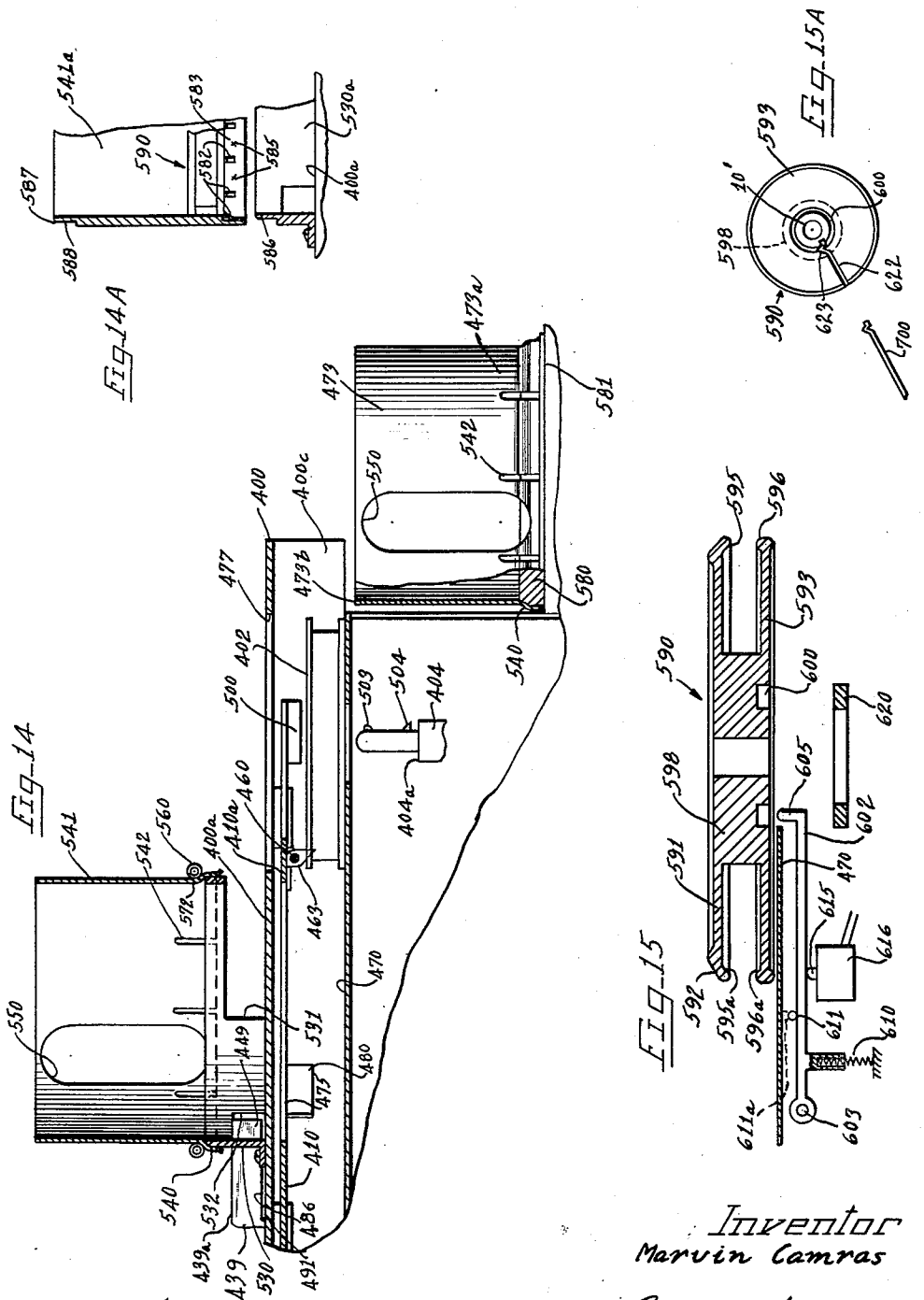

Inventor
Marvin Camras

by Lee, Sherman, Meroni, Gross & Pegram Attys.

United States Patent Office

3,197,150

Patented July 27, 1965

3,197,150
TRANSDUCER MACHINE AND SPOOL CONSTRUCTION THEREFOR

Marvin Camras, Glencoe, Ill., assignor to IIT Research Institute, a corporation of Illinois

Filed July 11, 1960, Ser. No. 41,860
48 Claims. (Cl. 242—55.13)

This invention relates to various improvements relating to single spool cartridge machines such as disclosed in my copending application for patent Serial No. 801,403 filed March 23, 1959 and entitled "Single Spool Magazine Tape Recorder."

It is an object of the present invention to provide a novel easily threaded take-up reel for a manually threaded transducer machine.

It is another object of the present invention to provide a novel transducing machine adapted to receive single spool cartridges of the type disclosed in my aforementioned copending application and which is operative to engage the tape leader with the cartridge for retention thereby during rewind of the leader onto the cartridge.

It is a further object of the present invention to provide a manually threaded machine adapted to receive single spool cartridges and wherein the coupling means on the tape leader of the cartridge coacts with a specially designed take-up reel to facilitate manual threading of the tape leader and automatic rewinding of the tape leader onto the cartridge.

It is another object of the invention to provide a novel automatic coupling mechanism for use with single spool cartridge transducing machines of the type disclosed in the aforementioned copending application.

Another object of the present invention is to provide a novel tape leader for a single spool cartridge.

A further object of the invention is to provide a novel mechanism for automatically changing single spool cartridges in conjunction with a single spool cartridge transducing machine such as disclosed in said copending application.

Other objects, features and advantages of the present invention will be apparent from the following detailed description taken in connection with the accompanying drawings, in which:

FIGURE 1 is a somewhat diagrammatic top plan view of an automatic threading transducer machine for single spool cartridges similar to that disclosed in detail in said copending application Serial No. 801,403;

FIGURE 2 is a fragmentary enlarged plan view of the automatic coupling mechanism of the machine of FIGURE 1 illustrating the manner in which the threading leader is coupled with the tape leader on the single spool cartridge;

FIGURE 3 is a detailed view illustrating the construction of the tape leader and threading leader coupling means shown in engagement in FIGURE 2, viewed edgewise;

FIGURE 4 is a fragmentary somewhat diagrammatic view of the tape leader and threading leader and associated coupling means viewed in side elevation;

FIGURE 5 is a somewhat diagrammatic illustration of a portion of a conventional record transducing machine modified to incorporate a novel take-up reel construction and a novel tuck-in roller for particularly adapting the machine for use with single spool cartridges such as shown in FIGURES 1 through 4;

FIGURE 5A is a somewhat diagrammatic plan view of a take-up reel for the machine of FIGURE 5 having a modified retaining slot for the end of the tape leader of a single spool cartridge;

FIGURE 5B is a fragmentary somewhat diagrammatic horizontal sectional view of an abutment means for use with a manually threaded machine having a fixed supply spindle;

FIGURE 6 is a fragmentary enlarged transverse sectional view of the take-up reel of FIGURE 5, the sectional view being taken along the line VI—VI in FIGURE 5 and looking in the direction indicated by the arrows;

FIGURE 6A is a diagrammatic vertical sectional view showing a modified tuck-in abutment for the machine of FIGURE 5;

FIGURE 7 is a fragmentary horizontal sectional view showing parts of an automatic changer mechanism for the machine of FIGURE 1 in top plan;

FIGURE 8 is a digrammatic vertical sectional view of the automatic changer mechanism of FIGURE 7.

FIGURE 9 is a cross sectional view of a single spool cartridge adapted for use in the changer mechanism of FIGURES 7 and 8;

FIGURE 10 is a somewhat diagrammatic top plan view of a modified form of changer mechanism of the machine of FIGURE 1;

FIGURE 11 is a somewhat diagrammatic side elevational view of the changer mechanism of FIGURE 10;

FIGURE 12 is a bottom plan view of the changer mechanism of FIGURES 10 and 11 illustrating the actual physical proportions of an operative changer mechanism in accordance with the present invention, the mechanism being in its deenergized condition;

FIGURE 13 is a bottom plan view similar to FIGURE 12 but illustrating the positions of parts during a cartridge changing operation of the mechanism;

FIGURE 14 is a somewhat digrammatic vertical sectional view illustrating the mechanism of FIGURES 10 through 13 in conjunction with a multiple cartridge magazine for assembling a plurality of cartridges as they are discharged from the changer mechanism and for accommodating loading of a plurality of the cartridges into the changer mechansim as a unit;

FIGURE 14A is a fragmentary vertical sectional view showing a modified cartridge magazine structure for the machine of FIGURE 14;

FIGURE 15 is a somewhat diagrammatic vertical cross sectional view of a single spool cartridge for use in the machine of FIGURES 10 through 14 and indicating the manner in which the spool may selectively actuate or fail to actuate a safety switch of the machine controlling the erase and recording functions of the machine, for example;

FIGURE 15A is a bottom plan view of the cartridge of FIGURE 15 and illustrating the construction of a threading slot for use when the cartridge is inverted and utilized as a take-up reel with which the tape is to be manually engaged, for example on manually threaded machines;

FIGURE 16 on sheet 3 of the drawings is a diagrammatic top plan view of a further modified form of changer mechanism for the machine of FIGURE 1; and

FIGURE 17 is a diagrammatic vertical transverse sectional view of the mechanism of FIGURE 16.

As shown on the drawings:

FIGURE 1 illustrates certain features of an automatic threading single spool magazine machine. Further details of the operation of the drive mechanism of the machine are found in Camras application Serial No. 801,403 filed March 23, 1959 and entitled "Single Spool Magazine Tape Recorder" now Patent No. 3,025,011. The disclosure of said copending application Serial No. 801,403 now Patent No. 3,025,011 is specifically incorporated herein by reference with respect to each of the embodiments of the present invention. The disposition of parts in FIGURE 1 is substantially identical to the disposition of parts in FIGURE 11 of said copending application Serial No. 801,403 now Patent No. 3,025,011 except that the head **10**, capstan **11**, shiftable pressure roller **12** and other parts defining the tape path from the single spool cartridge **15** to the take-up reel **16** have been shifted with respect to a median plane through supply reel spindle **20** and take-up spindle **21** to accommodate unwinding of the tape from the cartridge **15** as the cartridge rotates in the counterclockwise direction. The active oxide coated side of the tape rides over the transducer **10** and capstan **11**, and the pressure roll **12** acts against the plastic base of the tape. The single spool cartridge **15** is thus compatible with a conventional machine such as indicated at FIGURE 5 where the supply reel turns in the counterclockwise direction as the tape is unwound therefrom. It will be understood that this rearrangement of the capstan and pinch roll in FIGURE 1 requires a simple corresponding rearrangement of the mechanism of the copending application Serial No. 801,403 without any change in the operation of the respective component parts, and may readily be accomplished by a skilled mechanic.

As described in said copending application Serial No. 801,403, the single spool magazine machine may comprise a casing **30** receiving a top plate **31** from which the tape transport and amplifier mechanism are suspended. Suitable screws such as indicated at **32** may be provided for securing the plate **31** to the casing **30**. The plate **31** may have a cover (not shown in FIGURE 1) mounted thereon by means of hinges for covering the take-up reel **16**, transducer head **10**, capstan **11** and pressure roll **12**, and providing a loading slot for accommodating insertion of the cartridge **15** into a position overlying the spindle **20**, the slot opening laterally, for example, with respect to the axis of spindle **20** at the right hand side of the machine as seen in FIGURE 1. The spindle **20** is retracted during magazine loading operation and the top horizontal wall of the cover carries a magazine bearing plate with a raised annular bead at a central aperture to provide a recess aligned with the spindle **20**. The central aperture provides clearance accommodating upward movement of the spindle **20** a slight distance above the operating position shown in FIGURE 1 during engagement of the spindle **20** with the cartridge.

The apparatus is provided with a manual selector knob **33** having "load," "stop," "rewind" and "playback" positions. If the machine is designed to reproduce stereophonic magnetic record tapes, for example, a pair of gain control knobs **35** and **36** may be provided for individually adjusting the volume of reproduction of the respective channels of the tape record. A power switch is indicated at **38** for controlling the supply of power to the drive motor and amplifier of the machine. It may be noted that the knob **33** would be in its extreme counterclockwise "load" position during loading of the tape cartridge **15**.

When in the load position, a control finger **39** pivotally mounted at **40** positions a hook **42** of a threading leader **43** clear of the loading path of the cartridge **15**. A cooperating pressure member **45** is spring urged at all times toward the control finger **39** and is mounted on a pivot shaft **47** for swinging movement. In the "load" position of selector knob **33** the spindle **20** is retracted to accommodate insertion of the cartridge **15** into the operating position above spindle **20**.

After the cartridge **15** has been suitably delivered to the position shown in FIGURE 1, a crank arm (not shown) is operated to raise the spindle. Due to a cam action, the spindle **20** is momentarily raised above the final operating position shown in FIGURE 1 to cause a spring urged detent **60** projecting from spindle **20** to be pressed through the central aperture of the cartridge **15** to a position to engage over the top surface of the cartridge **15**, the cartridge being held against upward movement by the previously mentioned bearing plate raised annular bead on the inside of the cover (not shown). The final movement of the crank causes retraction of the spindle **20** from its extreme upper position to a final position spacing the cartridge **15** for free rotation in the magazine receiving space.

With the cartridge **15** properly disposed on the spindle **20**, the selector knob **33** is moved to the "stop" position which causes control finger **39** to swing into operative position relative to the cartridge as shown in FIGURE 1 and FIGURE 2 with hook **42** bearing against the outer surface of the tape leader **63** of magnetic recording tape **64** wound on the cartridge **15**.

When the selector knob **33** is moved to "rewind" position, supply spindle **20** is pivoted generally in the direction of the arrow **66** in FIGURE 1 to engage the rewind drive for spindle **20** and rotate the spindle in the clockwise direction as seen in FIGURE 1. Cartridge **15** is then driven in the clockwise direction until hook **42** engages with the embossed eye means **70** on the leader **63** associated with the cartridge **15**, as best seen in FIGURE 2. The rewind drive then slips since the threading leader **43** is held against movement by its attachment as indicated at **72** to a pin carried in a recess **73** of the take-up reel **16**.

When the selector knob **33** is moved to "playback" position, the rewind drive is disengaged by movement of the spindle **20** in the direction opposite to the direction of the arrow **66** as indicated by the arrow **75** in FIGURE 1. The drive for the take-up spindle **21** is engaged to rotate the take-up reel **16** in the counterclockwise direction. Rotation of the take-up reel **60** in the counterclockwise direction winds the threading leader **43** on the take-up reel. As the parts **42**, **70** of the threading leader **43** and tape leader **63** travel about capstan pressure roller **12**, they project therefrom sufficiently to engage trigger arm **80** and rotate the arm slightly in the counterclockwise direction to release a catch and allow a spring to press the pressure roll **12** toward the capstan shaft **11**. It will be observed that the tape threading path also includes guide pins **81** and **82**, and the guide pins **81** and **82** together with the cooperating pressure member **45** are, of course, configured so as to smoothly guide the hook **42** without snagging on these members. The same is true of the transducer head assembly **10**. It will be observed from FIGURE 2 that when the hook **42** is engaged in the eye means **70**, very little, if any, of the hook **42** projects at the inner side which is the active face of the tape. This facilitates pulling the hook **42** past the pressure member **45**, guide pin **81**, transducer head assembly **10**, capstan **11** and guide pin **82**. The threading operation is also facilitated by the fact that the pressure roller **12** is held in spaced relation to the capstan **11** with the control knob **33** in playback position until the trigger arm **80** is actuated.

The modifications of the drive mechanism of the copending application Serial No. 801,403 which are necessary to accommodate the different directions of rotation of spindles **20** and **21**, control finger **39**, capstan **11** and trigger **80** and the slight modifications of linkage arms and the like required by the different locations of these parts relative to the control knob **33** will be apparent to

those skilled in the art and need not be specifically described.

At the end of the "playback" operation, selector knob 33 may be moved to "rewind" position to engage the rewind drive and rewind the tape onto the cartridge 15. The capstan pressure roll 12 is held in an open position as shown in FIGURE 1 while the selector knob is in "rewind" position independently of the position of trigger arm 80 so that the hook 42 and eye means 70 can pass readily between the capstan and pressure roller and so that the actuation of trigger arm 80 will not release the pressure roll. As the final loop of the threading leader 43 about the take-up reel 16 is unwound, a brake is actuated to begin the braking operation and to stop the rewind operation at the precise desired point with the hook 42 properly positioned for disengagement from the eye means 70 on the cartridge and for reengagement with the corresponding eye means of a new cartridge.

The control finger 39 is spring pressed against the tape as it rewinds onto cartridge 15 with sufficient pressure to press the tape leader 63 past the confronting shoulders such as indicated at 87 at the periphery of the cartridge 15 which confronting annular shoulders are spaced apart an axial distance greater than the width of the tape 64 but less than the maximum width of the tape leader 63. The control finger 39 thus insures that the end of the tape leader 63 will be firmly held by the confronting shoulders 87 of the cartridge when the cartridge is ejected from the machine to retain the tape in tightly wound relation on the cartridge.

When the selector switch knob is moved to "stop" position to disengage the rewind drive and then to "load" position control finger 39 is moved away from the cartridge and the spindle 20 is rotated slightly in the counterclockwise direction so as to disengage hook 42 from eye means 70 simultaneously with the movement of the control finger 39 away from the cartridge. The net result of these movements is to free the space occupied by the cartridge so that the cartridge may be ejected in the direction of the arrow 90 and a new cartridge placed in the loading position shown in FIGURE 1 either by movement vertically downward into the space or by lateral movement in the direction opposite to the direction of arrow 90.

The crank controlling the vertical position of spindle 20 may now be rotated to lower the spindle out of engagement with the cartridge 15 to accommodate ejection of the old cartridge and replacement thereof with a new cartridge.

FIGURE 5 illustrates the use of the same cartridge 15 on a conventional manual thread machine 100 which may, for example, be a commercial machine such as illustrated in U.S. Patent No. 2,877,958. The disclosure of said patent is incorporated herein by reference to supply the details of the mechanism of the machine 100. Using primed reference numerals corresponding to the numerals used in said patent in describing this conventional machine, the single spool cartridge 15 of the present invention is placed on a supply spindle 10'. The spindle 10' is carried by lever 62' which is mounted intermediate its ends on a rotatable vertical shaft 63'. Upon actuation of the rewind control of the machine, the lever 62' is shifted in the counterclockwise direction to a position indicated in dot dash outline at 62'' to move shaft 10' and cartridge 15 toward an abutment roller 102 of the present invention. The roller 102 is thus placed in engagement with the tape wound on the cartridge 15 for pressing the tape leader 63 (FIGURE 2) radially inwardly of the confronting peripheral shoulders 87 of the cartridge 15 in the same manner as was described with reference to control finger 39 in FIGURES 1 and 2. In other conditions of the machine, the cartridge 15 is in the solid line position shown in FIGURE 5 clear of the tuck-in roller 102. The roller 102 comprises a suitable ring of plastic material having an axial extent or height substantially equal to the width of the tape 64 and slightly less than the spacing between the confronting peripheral shoulders 87 of the cartridge 15.

In threading the tape on this conventional machine, the end of the tape leader 63 is pulled out from between the confronting shoulders 87 of the cartridge and with the cartridge 15 on the spindle 10', the tape leader 63 is led through the slot 104 between the sound head assembly 13' and a cover portion 105 of the machine and is pressed vertically downwardly into a slot 110 of the take-up reel 112 of the present invention.

As best seen in FIGURE 6, the slot 110 may extend entirely through the take-up reel 112 including the upper and lower flanges 115 and 116 and central hub 117. It will be observed that the hub 117 has an axial extent approximately equal to the width of the tape leader 63 at its free end as seen in FIGURE 4. By way of example of ra quarter inch tape, the tape leader 63 may taper from a width of .340 inch at its free end to a width of .250 inch at its junction with the tape 64 and may be made of "Mylar" film having a thickness of between .002 and .005 inch. The threading leader may be of .002–.005 inch "Mylar" film having a uniform width of .340 inch. The hook 42 may be of stiff nylon material, or nylon or plastic with a metal core for strength.

The hook 42 may include an integral stiff portion 42*a* about which the threading leader 43 is wrapped with the free end 43*a* of the threading leader tightly sealed to portion 43*b* of the leader to firmly retain the flat portion 42*a* of hook 42 in the disposition shown in FIGURES 2, 3 and 4. The hook 42 has a free turned end portion 42*b* which projects below portion 43*c* of leader 43 sufficiently to reliably engage eye means embossment 70*b* as shown in FIGURE 2. The length of end portion 42*b* of hook 42 is substantially equal to the length of the sloping engagement face 70*c* of eye means embossment 70*b*, so that as seen in FIGURE 2, the free edge 42*c* of end portion 42*b* of hook 42 is substantially flush with the undersurface of tape leader 63 to facilitate travel of the hook 42 past pressure member 45, head assembly 10, capstan shaft 11 and guide pin 82.

The pressure member 45 has a diverging face 45*a* for by-passing hook 42 and eye means 70, and the end 45*b* of member 45 is positioned in its active position shown in FIGURE 2 spaced radially outwardly of the adjacent portion 63*a* of the outer convolution of tape leader 63 (when the hook 42 rides on the outer convolution of leader 63) a distance greater than the radial dimension of eye means 70 so that embossment portion 70*b* of eye means 70 clears end 45*b* of member 45 during rewind rotation of cartridge 15 prior to engagement of hook 42 with eye means 70. The threading leader 43 is sufficiently stiff to be reliably held substantially in the position indicated in FIGURE 2 by member 45 relative to finger 39 in both "load" and "rewind" positions of finger 39.

As best seen in FIGURE 6, a detent ball 120 is carried within the hub 117 at a cylindrical bore 122 which may have a diameter slightly greater than the diameter of the detent ball 120. A compression spring 124 is interposed between the ball 120 and a plug 126 closing the radially outer end of the bore so that the detent ball 120 is urged out of the bore and into slot 110 at all times. When the tape leader 63 is inserted edgewise and vertically downwardly into the slot 110 as viewed in FIGURE 6, the lower edge of the leader 63 is sufficiently stiff to deflect the detent ball 120 into the bore 122 against the action of the compression spring 124. When the eye means 70 best seen in FIGURE 4 registers with the detent ball 120, the detent ball 120, the detent ball will effectively be pressed into the recess provided by the eye means 70 preferably with sufficient force so that the tape leader will be held in slot 110 when winding of the tape onto the take-up reel 112 is initiated by actuation of a play, record or fast forward control of the machine without any previous wrapping of the tape leader about the hub 117 as has heretofore been required. It will be apparent that the radially inner end of the slot

110 indicated at 110*a* in FIGURE 5 is radially inwardly of the bore 122 a distance at least equal to the distance between the terminal end 63*a* of tape leader 63 and the open part 70*a* of eye means 70 shown in FIGURE 4 so that the ball 120 will register with the open portion 70*a* of eye means 70.

FIGURE 5A illustrates a modified take-up reel 112*a* for the conventional machine of FIGURE 5, which reel has a solid annular hub 117*a* with a slot 110*a* therein similar to the slot 110 in FIGURE 6 but having a V-shaped portion 120*a* which is sufficiently sharp to retain the tape leader 63 in the slot 110*a* as the take-up reel 112 is rotated in the take-up direction. On the other hand, during rewind, the forces are sufficient to pull the tape leader 63 out of the slot 110*a* so as to be wrapped onto the cartridge 15 by the abutment 102 as described in connection with FIGURE 5.

FIGURE 5B shows a tuck-in abutment finger 130 pivotally mounted at 131 adjacent a fixed supply spindle 132 of a conventionally threaded machine. The cartridge 15 on the spindle 132 is of the same construction as shown in FIGURE 2 and has a tape leader 63 which is to be tucked behind annular shoulders such as indicated at 87 as the tape is rewound onto cartridge 15 from a take-up reel such as 112 in FIGURE 5 or 112*a* in FIGURE 5A. The operative end of finger 130 is of a height to fit between the confronting shoulders 87 of cartridge 15 in the same manner as shown for abutment face 102*c* in FIGURE 6A. A spring 133 is connected between the finger 130 and a base plate 134 which carries pivot pin 131 to urge the finger in the clockwise direction. A stop pin 135 is carried by the plate 134 in such a position that end 130*a* will normally assume a position as shown in FIGURE 5B engaging the tape leader 63 radially inwardly of the outermost convolution thereof on the cartridge so as to be adapted to strip the free end 63*a* of the leader from the cartridge when the cartridge is manually rotated in the counterclockwise direction. During rewind the spring 133 will exert sufficient force to tuck the end portion of leader 63 which is wider than the record tape behind the annular shoulders 87.

During loading of a cartridge on spindle 132, finger 130 may be manually rotated in the counterclockwise direction to a position such as indicated in dotted outline at 130′. After the cartridge is in place, finger 130 is released and the cartridge manually rotated in the counterclockwise direction to cause the end of finger 130 to engage under end 63*a* of tape leader 63 and force the leader out from behind shoulders 87 where it may be conveniently manually engaged and threaded, the end of the leader being pressed into detachable engagement with a take-up reel such as 112 or 112*a*. The threading path is indicated at 136 in FIGURE 5B. During rewind of the tape onto the cartridge 15, the leader 63 is automatically pulled out of engagement with the take-up reel and pressed behind the shoulders 87 by the action of tuck-in finger 130.

If a larger spool is to be placed on supply spindle 132, the plate 134 together with finger 130 may be removed from its mounting channel 137 in the direction of arrow 138. The channel 137 may comprise a flat base portion 137*a* secured to the top panel 140 of the machine, for example by double faced pressure sensitive tape. The base portion has flanges 137*b* and 137*c* defining opposed channels for receiving the edges of base plate 134 in sliding relationship. One end of each channel is closed by staking flanges 137*b* and 137*c* as indicated at 137*d* and 137*e*. The plate 134 may be held in place in channel 137 by friction or any other suitable means.

FIGURE 6A illustrates a modification of the abutment 102 wherein the abutment 102*a* comprises a post secured for example by means of an adhesive base 102*b* to the top plate 100 of the machine of FIGURE 5. The post 102*a* may have a suitably curved face 102*c* for acting against the threading leader 63 when the spool 15 is shifted to rewind position as indicated in FIGURE 5 to press the end of the tape leader 63 behind the confronting shoulders such as indicated at 87 in FIGURE 6A. It will be apparent that a post such as indicated at 102*a* may be secured to an existing conventional tape recorder such as indicated in FIGURE 5, for example by means of a double faced pressure sensitive tape without the use of any special tools and without the necessity for drilling holes in the top panel 100 of the machine.

FIGURES 7 and 8 illustrate an automatic changer mechanism in operative association with the automatic threading single spool cartridge machine of the aforementioned copending application Serial No. 801,403, now Patent No. 3,025,011. The changer mechanism may be applied to the machine of said copending application with the proportions and arrangements of parts exactly as shown in said copending application but with the cover member of the aforementioned application removed and the changer assembly shown in FIGURES 7 and 8 including the casing member 210 secured directly to the top plate of the machine of the copending application and which is designated herein by reference numeral 211. The retractible supply spindle of said machine herein assigned reference numeral 214 is shown at the right in FIGURE 8. In correspondence with the disclosure of said copending application, a threading leader control finger 216, FIGURE 7, is pivotally mounted at 217 and has a cooperating pressure member 219 pivotally mounted at 220 and continuously urged against the control finger 216 by means of a tension spring (not shown) connected between arms associated with the respective pivot shafts 217 and 220. The pressure member 219 serves to clamp a threading leader 223 against the control finger 216 so that the coupling element on the end of the threading leader 223 may be moved into engageable relation to the coupling element on the end of the tape leader wound on the cartridge 225. As fully described in said copending application, the threading leader coupling part is engaged with the tape leader coupling part as the spindle 214 is driven in the rewind direction to rotate cartridge 225 in the counterclockwise direction as seen in FIGURE 7. The disclosure of said copending application is incorporated herein by reference to illustrate a preferred automatic threading single spool cartridge machine for the embodiment of FIGURES 7 and 8.

The threading leader 223 is pre-threaded through the various tape engaging parts of the machine as shown in said copending application and is permanently secured to take-up reel 230, FIGURE 8, which is permanently affixed to take-up spindle 236. It will be apparent that the tape contacting parts such as guide pins, transducer head, capstan shaft and pressure roller of the machine of said copending application can be arranged substantially as shown in said application in the embodiment of FIGURES 7 and 8 within the rectangular casing 210, these parts having been omitted from FIGURES 7 and 8 for clarity of illustration.

In FIGURES 7 and 8, a stack of single spool cartridges 240, 241 and 242 are shown nested upon each other (with the record tape such as pre-recorded magnetic record tape which would normally be wound on the cartridges not shown). The stack of cartridges 240–242 is supported on changer blades 250, 251 and 252 directly above and centered with respect to the supply spindle 214. The spindle 214 is retractible to the position shown in dotted outline at 214*a* in FIGURE 8 below the top plate 211 to accommodate ejection of the cartridge 225 and delivery of a new cartridge 240 into the operative position.

he changer blades 250–252 are fixedly secured to vertical shafts 260–262 which are journalled by suitable means such as indicated at 265 and 266 in FIGURE 8 secured to the casing 210. The journals such as 265 and 266 hold the shafts 260–262 in the vertical positions shown in FIGURE 8 while accommodating rotation of

the shafts a limited amount to disengage blades 250–252 from the cartridge 240, for example, while simultaneously upper blades 270, 271 and 272 on shafts 260–262 move into supporting relation to the upper flange of cartridge 241. The vertical shafts 260–262 also carry lower blades such as 280 and 281, FIGURE 8, which are of the same configuration and extend in the same angular directions as the respective intermediate blades 250–252. Thus when vertical shaft 260 rotates in the clockwise direction as seen in FIGURE 7 to disengage blade 250 from the lower flange of cartridge 240, blade 280 simultaneously moves out of vertical alignment with the cartridge 240 allowing the cartridge 240 to drop vertically into the operative position while blade 270 engages the upper flange of cartridge 241 to support this cartridge. The blades on shafts 261 and 262 operate in an analagous manner.

For ejecting cartridges from the machine after play thereof, the supply spindle 214 is first retracted to the position shown in dotted outline in FIGURE 8, after which the drive motor 300 is energized by suitable means such as a limit switch responsive to the retracted position of spindle 214 or a manually actuated switch. The motor 300 drives output shaft 301 in the counterclockwise direction as seen in FIGURE 7 to drive arm 303 counterclosewise from the position thereof indicated in solid lines and thus drive cartridge ejector slide 305 longitudinally in the direction of the arrow 307 through a coupling link 308 pivotally connected at 309 with arm 303 and pivotally connected at 310 to the slide 305. The ejector slide 303 is suitably guided for longitudinal reciprocation by means of a guide pin 312 which is adapted to ride in the central longitudinal slot 315 of the slide member 305. Additional guiding pins as indicated at 320 and 321 in FIGURE 7 may be provided for guiding the ejector extensions 323 and 324. The slot 315 is, of course, of sufficient length to accommodate a full longitudinal ejecting movement of the slide 305. Similarly, the drive arm 303 is of such length and so positioned as to drive the slide 305 a sufficient distance to completely eject the cartridge 225 from the machine in the direction of the arrow 307. Specifically, as seen in FIGURE 8, extensions 323 and 324 of slide 305 have downturned end portions 326 and 327 which are adapted to engage the edge 330*a* of the upper peripheral flange 330 of the cartridge 225 and to move the same out of the operative position shown in FIGURES 7 and 8 in the direction of the arrow 307. The end portions 326 and 327 may be notched to clear blades such as 281 during their ejecting movement. After ejection of the cartridge, motor 300 continues to rotate shaft 301 until the position of arm 303 shown in dotted outline in FIGURE 7 is reached whereupon pins 340 and 341 engage yoke member 343 and begin to move the yoke member to the left as seen in FIGURE 7. The yoke member has a notch centrally thereof through which shaft 260 extends and which accommodates longitudinal movement of yoke member 343 relative to the shaft. The yoke member 343 has pins 346, 347 and 348 thereon which ride in cooperating slots in actuating links 350, 351 and 352 fixed to the respective vertical shafts 260, 261 and 262. The slots in the actuating links 350–352 are so arranged that retraction of yoke member 343 swings shaft 261 counterclockwise, shaft 260 clockwise and shaft 262 clockwise to bring the respective blades 270, 271 and 272 into supporting relation to the upper flange of cartridge 214 and to thereafter bring blades 250, 251 and 252 out of supporting relation of the lower flange of cartridge 240, and correspondingly to clear fingers such as 280 and 281 seen in FIGURE 8 to allow the cartridge 240 to drop into the operative position shown occupied by cartridge 225 in FIGURE 8. Motor 300 continues to rotate after the fork 305 is fully retracted to allow the fork to be moved by springs 362 and 363 in the direction of the arrow 307 until limit switch 360 is actuated with arm 303 in the position shown in solid outline in FIGURE 7. Tension spring means 362 and 363 are connected between the casing 210 and the ends of yoke member 343 so as to pull the yoke member 343 in the direction of the arrow 307 as pins 340 and 341 on slide 305 move in this direction until the yoke member 343 returns to the position shown in solid outline in FIGURE 7 with the ends of yoke members 343 engaging stops 364 and 365. As the pins 346–348 force rotation of the actuating links 350–352 in the respective opposite directions, fingers 250–252 are first moved into underlying relation to the cartridge 241, after which fingers 270–272 move out of supporting relation to the upper flange of cartridge 241 allowing the cartridge to drop onto the fingers 250–252. The fingers 270–272 and 250–252 may each have a curved guide plate thereon such as indicated at 370 of height generally corresponding to the height of the flange portions engaged by the associated fingers so as to properly center the stack of cartridges with respect to the supply spindle 214 or any other suitable means may be provided for this purpose.

When the next cartridge 240 has dropped onto the plate 211, supply spindle 214 is raised through the central aperture of the cartridge corresponding to aperture 390 of cartridge 225. A detent 391 of the shaft 214 is pressed into its receiving socket in shaft 214 as the spindle 214 is pressed through the central opening of the cartridge. The upper flange of the cartridge engages the fingers such as 280 and 281 to prevent upward movement of the cartridge above a certain level as the spindle 214 is pressed into engagement with the cartridge. In the extreme upper position of the spindle 214, detent 391 is above the top surface of the upper flange and projects into overlying relation to the cartridge to retain the cartridge in a fixed position relative to the spindle 214. Spring urged keying jaws such as indicated at 393 are carried on the spindle, and during initial rotation of the spindle, these jaws will be pressed outwardly into cooperating slots such as indicated at 395 in the cartridge to interlock the cartridge with the spindle for joint rotation. As previously described, the spindle 214 is retracted slightly from its extreme upper position to an operating position in which a shoulder 396 on spindle 214 supports the cartridge in spaced relation to the top plate 211 and in spaced relation below the fingers such as 280 and 281 for free rotation of the cartridge with the spindle 214.

FIGURE 9 illustrates the details of a preferred form of single spool cartridge which may be utilized in connection with the embodiment of FIGURES 7 and 8. In this embodiment, the cartridge is provided with the confronting peripheral shoulder portions 400 and 401 defining an opening 402 having an axial extent somewhat greater than the width of the tape wound on the cartridge but less than the maximum width of the tape leader indicated at 404 in FIGURE 9.

The cartridge is provided with a circular bead or shoulder 407 at the upper side thereof and a complementary annular recess 408 at the lower side thereof of dimensions slightly exceeding the cross section of the annular bead 407 so that identical annular beads such as 407 on other cartridges will readily nest within the recess 408 of the cartridge 225 in FIGURE 9. By this structure, a number of cartridges such as indicated at 240–242 in FIGURE 8 can readily be stacked on the changer fingers 250–252 without danger of the upper cartridges sliding off of the stack.

The cartridge of FIGURE 9 may additionally be provided with an annular groove 410 at its lower side which is adapted to cooperate with a sensing finger 411 which is pivotally mounted on a horizontal pin 412 which may be carried by any suitable bracket from the lower side of top panel 211 in the position indicated in FIGURE 8. An end portion 411*a* of the finger 411 projects upwardly through an opening in the top panel 211 in vertical alignment with the recess 410. When the machine of FIG-

URES 7 and 8 is conditioned for a recording operation, a pin 414 is moved from the position shown in solid outline in FIGURES 8 and 9 to an upper position shown in dotted outline at 414*a* in FIGURE 9 where the pin may bear against the undersurface of panel 211 and free the finger 411 for upward pivotal movement about the pin 412. A spring 415 acts on the finger 411 by means of a cylindrical cage portion 416 thereof to urge the finger upwardly so that when the pin 414 moves to the record position shown in dotted outline at 414*a*, spring 415 causes the end portion 411*a* of finger 411 to be pressed into the recess 410 of the spool. The recess 410 is, of course, of sufficient width or radial extent to freely receive the end portion 411*a* of finger 411 and is of appreciable depth or axial extent. The switch 419 will remain in its open condition preventing energization of the recording circuits of the machine unless the finger 411*a* penetrates to the bottom of the recess 410. Thus, if annular ring 420, FIGURE 9, is inserted in the recess 410, the end portion 411*a* will engage this ring and prevent closure of the contacts of switch 419 and thus prevent a recording operation. If a cartridge contains a reel of tape which has previously been recorded upon and which is not to be erased, a ring member such as indicated at 420 is placed in the groove 410 of the cartridge, or the groove 410 is otherwise suitably covered to prevent the machine of FIGURES 7 and 8 from being placed in operation in the recording mode. By way of example, when the selector switch of the machine of FIGURES 7 and 8 is placed in the recording mode, the open contacts of the switch 419 may be placed in series in the energizing circuit for the motor which is to drive take-up reel 236, so that it will be impossible to energize the motor when the ring member 420 is in the annular groove 410 of the cartridge. On the other hand, if the ring member 420 is absent, when the selector knob is placed in the recording mode, pin 414 is moved to its upper position and spring 415 urges the end portion 411*a* of the sensing finger 411 into the annular groove 410 to close the contacts of switch 419 and enable energization of the driving motor associated with the machine. Of course, in other positions of the selector switch, the contacts of switch 419 will be by-passed to enable playback of the tape recorded on the cartridge whether or not the ring member 420 is present. Cartridges for the machine of FIGURES 8 and 9 which hold a permanent record may be formed without the groove 410 to give permanent protection to the record.

FIGURES 10 and 11 are relatively diagrammatic views indicating the general arrangement of parts for the changer mechanism which is to be applied to the machine of FIGURES 10 through 19 of my copending application Serial No. 801,403. A casing 400 is adapted to be secured to the top panel of the machine of said copending application with the various parts of said machine cooperating with the record tape all being disposed completely below the level of the changer parts within the casing 400. A cartridge 402 is shown in the operating position on supply spindle 404 of said machine. Downturned leg portions 500 and 501 at edges 406 and 407 of an ejector slide 410 are disposed in spaced relation above the cartridge 402 to facilitate engagement of the cartridge 402 with the spindle 404 upon upward movement of the spindle 404. The spindle 404 is retracted below the level of the bottom edge of casing 400 to allow the cartridge 402 to rest on the top plate of the machine and to be moved in the direction of the arrow 412 by ejector finger 463 (FIGURES 12 and 14) on slide 410 to eject the cartridge from the machine. The slide is reciprocated by means of a motor and speed reducer indicated at 420 having its output shaft 421 secured to a driving arm 422 which is movably engaged with the slide 410 by means of a transverse slot 425 therein and a cooperating member 430 mounted on the end of arm 422 and riding in slot 425. As motor shaft 421 is rotated for example in the counterclockwise direction as seen in FIGURE 10, the entire slide is moved in the direction of arrow 412 to eject cartridge 402.

The slide 410 has changer bars 439 and 440 projecting upwardly through longitudinal slots 442 and 443 in the casing 400. Extensions 449 and 450 at the forward end of bars 439 and 440 are adapted to move through vertical slots in the cartridge guide tube 453 and engage cartridge 455. As slide 410 is advanced by motor 420, extensions 449 and 450 engage the lowermost cartridge 455 of the stack of cartridges 455, 456, 457 and 458 and move the same along the top deck 400*a* of casing 400 in the direction of arrow 412, FIGURE 10.

Cartridge guide rails 465 and 466 have horizontal flanges 467 and 468 for engaging under the top flange of cartridge 455 radially outwardly of the tape (not shown) wound in the cartridge. Thus the flanges 467 and 468 would not extend into the cartridges beyond the retaining shoulders such as indicated at 87 in FIGURE 2. The flanges 467 and 468 have arcuate edge portions 467*a* and 468*a* conforming to the circumference of the cartridges, so that when a cartridge reaches the position directly over spindle 404, the flanges 467 and 468 are out of supporting relation to the cartridge and allow it to drop in the position shown for cartridge 402 in FIGURES 10 and 11.

For ejecting the previous cartridge, slide 410 carries a horizontal pivot shaft 460 journalled in bearings 461 and 462, FIGURES 12 and 13. The shaft 460 has fixedly secured thereto a pawl 463 which together with shaft 460 is urged to rotate in the clockwise direction as seen in FIGURE 14 by means of torsion spring 464, FIGURES 12 and 13. One end of spring 464 may be fixed to the pawl 463 and the other end 464*a* may extend into engagement with a solid section 410*a* of slide 410. The solid section 410*a* prevents clockwise rotation of pawl 463 beyond the position shown in FIGURE 14, but allows counterclockwise rotation of the pawl through approximately 90° against the action of spring 464 during retraction of the slide, to clear the pawl 463 of a new cartridge delivered into the position of cartridge 402 in FIGURE 14. As slide 410 is advanced, pawl 463 engages the cartridge 402 and slides it along top deck 470 to cause the cartridge to engage and ride along the top rim 473*b* of cartridge magazine tube 473.

By the time that the cartridge 402 has been completely displaced from its operative position shown in FIGURE 14 and drops into tube 473, an opening 475 of slide 410 moves into registration with opening 477 in casing 400 to allow the succeeding cartridge 455 (FIGURE 11) to drop through the openings 477 and 475 and into the operative position immediately above the spindle 404. A curved guide bracket 480 is secured to the underside of the slide 410 by means of a flange 481 as best seen in FIGURES 12 and 13. The guide bracket conforms with the contour of opening 475 and serves to guide the cartridge 455 into proper relationship to the retracted spindle 404 seen in FIGURE 14.

It will be observed that the extensions 449 and 450 are defined by inwardly extending slots 485 (FIGURE 11) and 486 (FIGURE 14) so that the forward ends of the extensions 449 and 450 are free to travel the required distance which is somewhat greater than the diameter of the cartridge to displace a cartridge from the position shown for cartridge 455 in FIGURE 11 to a position in alignment with opening 477, FIGURE 12, even though slots 442 and 443 in casing 400 terminate as indicated at 487 and 488 in FIGURE 12. In other words, the innermost ends of longitudinal slots 485 and 486, FIGURES 11 and 14, must be located as indicated by dotted lines 490 and 491 in FIGURE 13. The fixed cartridge tube 453 shown in FIGURES 10 and 11 has relatively large finger access openings such as indicated at 490 in FIGURE 11 for convenience in removing and inserting cartridges. The extensions 449 and 450 in re-

tracted position of the slide 410 are clear of the interior surface of the tube 453 to provide clearance for insertion of cartridges into the tube. The extension fingers 449 and 450 have a vertical extent somewhat greater than the axial spacing between the flanges of the cartridges so that the fingers 449 and 450 engage at least one of the flanges at the peripheral marginal edge thereof in sliding the same out of the tube and into alignment with the opening 477 in the casing 400. It will be observed from FIGURE 11 that the top edges 439*a* and 440*a* of changer bars 439 and 440 are below the level of the next cartridge 456 so as to clear the same as the slide is moved in the forward direction. When the cartridge 455 has been completely displaced from the tube 453, the next cartridge 456 will rest on the top surfaces 439*a* and 440*a* of the changer bars 439 and 440 of slide 410. As the slide is retracted to its initial position shown in FIGURES 10 and 11, the next cartridge 456 drops into the position formerly occupied by cartridge 455.

The slide carries a pair of downturned portions 500 and 501, FIGURES 10, 11 and 14, which in retracted position of the slide 410 overlie the cartridge in the operative position to enable the spindle 404, FIGURE 14, to be projected through the center aperture of the cartridge to place the spring urged detent ball 503, FIGURE 14, into overlying relationship to the upper peripheral surface of the cartridge and to allow the spring urged jaw 504 to be aligned with a corresponding notch in the cartridge for conjoint rotation thereof, the lower peripheral surface of the cartridge resting on the shoulder 404*a* of shaft 404. As previously described, after the spindle 404 is completely engaged with the cartridge, the spindle is retracted slightly to space the cartridge below the lower edges of portions 500 and 501, the lower peripheral surface of the cartridge being spaced above the deck 470 for free unhampered rotation of the cartridge with the spindle 404. The side walls 400*b* and 400*c* of casing 400 are of sufficient vertical extent so that all the tape engaging elements of the machine together with the automatic threading elements of the machine are spaced below the path of movement of the various component parts associated with the slide 410 or otherwise out of the path of movement of such parts.

When the slide reaches the end of its retracting movement, end portion 510 thereof engages an arm 511 of springy material and rotates the same in the counterclockwise direction about its pivot 512 causing an intermediate portion 515 of the arm to depress an actuating button 516 of a limit switch 517 to deenergize the motor 420. Separate contacts in parallel with the contacts of switch 517 are, of course, provided to initiate a further changer cycle which latter contacts are immediately opened after the slide has moved sufficiently to allow closure of the contacts of limit switch 517 due to the normal outward spring bias on the actuating button 516.

FIGURE 14 illustrates a preferred magazine construction for cartridges such as shown in FIGURES 10 and 11. The supporting tube 453 of FIGURES 10 and 11 is modified by providing a fixed receptacle portion 530 having a semi-cylindrical notch 531 for accommodating lateral delivery of the successive cartridges from the bottom of a stack of cartridges and containing slots such as indicated at 532 for accommodating entry of the finger extensions 439 and 440 in transferring successive cartridges to opening 477 in the casing structure 400. The upper edge of the receptacle structure 530 receives an outwardly flaring lower flange portion 540 of a cartridge magazine tube 541. The cartridge tube 541 has a series of slits 542 in the lower marginal portion thereof and this lower portion normally assumes a constricted condition defining a diameter less than the outside diameter of the cartridges to retain the cartridges in the magazine tube. The inside diameter of the receptacle portion 530, however, is slightly greater than the outside diameter of the cartridges and is so configured as to expand the lower portion of the magazine tube 541 into a diameter slightly exceeding the diameter of the cartridges to allow the cartridges to fall freely through the open end of the magazine tube 541 when assembled on the receptacle portion 530. The magazine tube 541 may be provided with suitable finger access apertures 550.

If desired, the lower constricted portion of the magazine tube 541 may be provided with a spring belt 560 which is operative in the free condition of the tube to constrict the lower end portion thereof to a diameter less than the diameter of the cartridges. Optionally, this spring belt may be omitted and a natural resilient set provided at the lower portion of the tube so that the lower portion of the tube normally assumes a constricted diameter less than the diameter of the cartridges. Additionally, a rubber gripping material (not shown) may be applied to the inner faces such as indicated at 572 of the lower portion of the tube 541 for enhancing the gripping action of this portion of the tube on the lowermost cartridge in the magazine.

Similarly, the magazine tube 473 located at the discharge position of the changer mechanism may have vertical slits such as indicated at 542 and finger access openings 550. The lower portion generally indicated at 473*a* of the tube normally assumes a constricted diameter less than the diameter of the cartridges but may be expanded by the raised pedestal portion 580 associated with support 581 to spread the lower portion 473*a* of the magazine to a diameter slightly greater than the diameter of the cartridges. The cartridges will then freely descend into the tube 473 to rest on the top of pedestal 580 until such time as the tube 473 is removed from the pedestal whereupon the lower portion 473*a* of the magazine wall constricts and resiliently grips the lower cartridge and retains the stack of cartridges within the magazine. The cartridge magazine 541 may be removed from receptacle portion 530 and interchanged with magazine tube 473 since the two magazine tubes are identical in construction except for the optional spring belt 560 which has been omitted from the magazine 473.

FIGURE 14A illustrates a modified cartridge magazine 541*a* which in released condition shown retains cartridges such as 500 by means of finger portions 582 struck out from metal ring 583. The ring 583 may be suitably secured within an annular recess 584 at the lower end of magazine 541*a*, for example by means of spot welds such as indicated at 585 or by means of a thin retainer ring (not shown) which may slip inside the lower end of magazine 541*a* and the lower part of ring 583 and be frictionally retained therewith by virtue of its close fit relationship with respect to the inside diameter of said lower end of the magazine. The free ends of fingers 582 normally project inwardly of the inside diameter of the magazine to support the cartridges such as 590 therein; however, a cooperating annular projection 586 on receptacle portion 530*a* fits into annular recess 584 to retract fingers 582 and provide a free path for cartridges which then rest on deck 400*a*. The configuration of receptacle portion 530*a* is identical to that of receptacle 530 except for projection 586, the inside diameter of receptacle portions 530 and 530*a* being equal to the inside diameter of magazines 541 and 541*a*.

A solid pedestal portion similar to 580 would be provided for magazine 541*a*, but such pedestal would preferably have the same exterior notch as provided by projection 586 to deflect spring fingers 582 inwardly so that the lowermost cartridge would rest on the pedestal until removal of the magazine 541*a* released the fingers 582 for engagement under one of the flanges of such lowermost cartridge. The top edge 587 of magazine 541*a* contains a notch 588 for receiving the lower edge of a second magazine identical to magazine 541 in nested

relationship with its spring fingers (similar to fingers 582) in retracted condition.

FIGURES 15 and 15A illustrate a suitable cartridge for use with the embodiment of FIGURES 10 through 14. The cartridge is designated generally by the reference numeral 590 and may include an upper flange 591 and a lower flange 593. The upper flange 591 may have a milled bevel generally indicated at 592 to distinguish this surface from the surface of lower flange 593 visually and tactually. The flanges 591 and 593 may have inwardly projecting shoulder portions 595 and 596 about the outer perimeter thereof which serve to retain a leader with the cartridge. The internal shoulder portions such as indicated at 595*a* and 596*a* may slope at an angle of approximately 45°, and the shoulders may be spaced a distance of approximately .311 inch for a one-quarter inch tape and a leader which tapers from .250 to .340 inch. The spacing between the flanges 591 and 593 radially inwardly of the shoulder portions 595 and 596 may be .343 inch or just slightly wider than the maximum width of the leader. The leader may have a length portion adjacent its free end corresponding to one circumference of cartridge 590 with substantially the maximum width of .340 inch to provide complete protection for the tape wound on the hub portion 598 of the cartridge.

The cartridge 590 is provided with an annular groove 600 which is adapted to be sensed by means of a feeler arm 602 pivotally mounted at 603 and having a finger portion 605 which is normally retained below the level of top deck 470 by a control pin 611 but which is spring urged upwardly by means of a compression spring 610. The control pin 611 is moved to its upper position indicated in dotted outline at 611*a* as the machine is conditioned for recording.

With the groove 600 open, the feeler arm 602 will be moved upwardly sufficiently to close the contacts associated with actuating button 615 of safety switch 616. Closure of the contacts of switch 616 enables the recording mode to be energized when such recording mode is manually selected by the operator. On the other hand, if the ring 620 is inserted into the groove 600, the feeler arm 602 will not be moved upwardly sufficiently to close the contacts of safety switch 616, and accordingly it will be impossible to operate the machine in the record mode. Thus, if a cartridge has a pre-recorded tape thereon which is not to be erased, a ring insert such as indicated at 620 is placed in the groove 600 of the cartridge to thereafter prevent erasure of the tape on that cartridge.

In modes other than the record mode, the control pin 611 is held in its position shown in solid outline in FIGURE 15 to hold the finger portion 605 below the level of deck 470. In other modes of operation of the machine, switch contacts may be provided in parallel with the contacts of switch 616 which contacts are closed and short circuit switch 616 in all modes except the record mode. The contacts of switch 616 may control energization of the driving motor of the machine or some other component necessary to recording operation.

FIGURE 15A shows a slot 622 opening at the underside of cartridge 590 and adapting the cartridge for inversion and use on a manually threaded machine as a take-up reel, for example with the machine of FIGURE 5. The sharp angle portion 623 of slot 622 in hub 598 will retain the end of a tape leader as the tape is wound on cartridge 590 and will automatically release the tape leader as the tape is rewound from cartridge 590 onto a supply reel.

FIGURES 16 and 17 illustrate a modified changer mechanism wherein the changer mechanism comprises a tube 650 adapted to contain a stack of cartridges such as 651, 652, 653 and 654. The tube may be permanently secured to a deck plate 655 of the machine, and the supply spindle 657 may be retractable through an aperture 653 in this deck plate to accommodate ejection of the cartridge such as 651 which has been played (in the lateral or horizontal direction) and the insertion of a new cartridge vertically into the operative position.

The tube 650 may have suitable arcuate apertures adjacent the operative spool position to accommodate automatic engagement of the threading leader with the leader on the tape associated with the cartridge in the manner described in the aforementioned copending application Serial No. 801,403.

In this embodiment, a changer slide 660 is provided having an upper pair of opposed confronting flanges 661 and 662 which ride in horizontal slots 664 and 665 in the tube 650. The flanges 661 and 662 are provided with complementary arcuate notches 670 and 671 which when registered with the stack of cartridges allow the stack to drop onto changer bars 680 and 681. As cartridge 651 is ejected by bars 680 and 681 carried by the slide 660, cartridges 652, 653 and 654 are supported at such a height that the upper flange of cartridge 653 is just above the level of flanges 661 and 662. When the slide is retracted, the flange portions indicated at 661 and 662 retain the cartridges 653 and 654 in the positions of the cartridges 652 and 653 shown in FIGURE 17. The weight of cartridges 651–654 may be such in comparison with the spring force on detent 675 of spindle 657 that no special hold down means for the cartridge to be engaged with spindle 657 are required.

The changer mechanism of FIGURES 16 and 17 is especially adapted for cartridges such as shown at FIGURE 9 which have stacking ribs and grooves 407 and 408. The slides 661 and 662 together with changer bars 680 and 681 may move together as parts of a unitary slide assembly 660.

Summarizing the operation of the embodiment of FIGURES 16 and 17, after a transducing operation with respect to the record of cartridge 651, spindle 657 is retracted and slide assembly 660 actuated. The bars 680 and 681 move the cartridge 651 to the right as seen in FIGURE 16 out of the operative position while at the same time slides 661 and 662 move in the same direction to place notches 670 and 671 thereof in registry with cartridge 652 allowing cartridge 652 to drop onto the top edges of changer bars 680 and 681. As the slide assembly 660 is retracted, slides 661 and 662 move into supporting relation to the upper flange of cartridge 653 while cartridge 652 is allowed to drop to the operative position. Thereafter, spindle 657 is engaged with the aperture of the cartridge 652, if necessary by raising the cartridge 652 until the same is backed by the weight of cartridges such as 653 and 654. Of course, slides 661 and 662 provide a limit for the upward travel of the cartridge 652 from the operative position as the spindle 657 is raised to engage detent 675 with the cartridge. After engagement of the detent with the cartridge upper surface as indicated in FIGURE 8, for example, the spindle 657 is retracted to place the cartridge 652 in the operating position.

The changer mechanism of FIGURES 16 and 17 may be utilized to feed successive cartridges of the type shown in FIGURE 9 along guide rails 465 and 466 in FIGURES 10 and 11. In this case fingers 449 and 450 would have the height shown for bars 680 and 681 in FIGURE 17 and flanges 661 and 662 would support the second cartridge such as 456 in spaced relation above the lowermost cartridge as shown in FIGURE 17. The bars 680 and 681 would push cartridge 455 to a position in registry with openings 477 and 475, while ejector pawl 463, FIGURE 14, ejects the cartridge 402. At the end of travel of the slide including flanges 661, 662, bars 680, 681 and pawl 463, notches 670 and 671 in flanges 661, 662 would allow cartridge 456 to drop onto the top of bars 680, 681. After the slide was fully retracted, cartridge 456 would reach the position of cartridge 455 in FIGURE 11, while cartridge 457 would be supported by flanges 661 and 662 in a manner similar to that shown in FIGURE 17.

In using a cartridge 15 with a manually threaded machine with a take-up reel as shown at 112*a* in FIGURE 5A, the leader 63 may be given a permanent V-shaped crimp at its end to fit freely edgewise into slot 110*a*. The permanent crimp will resist deformation and thus resist leader 63 being pulled longitudinally out of slot 110*a*. A permanently crimped leader of the contour of leader 63 in FIGURE 5A may also be used with the cartridge 593 shown in FIGURE 15A, such a leader being indicated at 700 in FIGURE 15A. This permanently crimped leader is found to make threading much easier. The leader end may have a series of V-crimps permanently set therein for use with a correspondingly shaped notch in a take-up reel. The permanently crimped leader preferably is deformable so as to be automatically disengaged from the take-up reel during rewind, for example when used with the machine of FIGURES 5 and 5A.

It will be understood that the changer slides shown in FIGURES 7–17 of the present application may be driven from the same motor which serves to drive the tape transport mechanism of the machines, rather than using a separate motor for the changer mechanism.

With reference to the spool of FIGURE 15, it will be apparent that the machine will not operate in the record mode if the spool 590 is placed in the machine in inverted position. This mechanism could be utilized to prevent playing or recording operations with respect to cartridges which are inadvertently inserted into the machine upside down. Alternatively, annular groove 600 could be provided only on non-permanent record cartridges to serve the function first described herein, and a second annular groove of different radius could be provided on both permanent and non-permanent cartridges to indicate the lower flange thereof. A second sensor similar to sensor 605 in FIGURE 15 would then cooperate with the second annular groove to permit motor operation only when the cartridge is in proper orientation with the second groove down.

A manually threaded machine may be constructed which will only accept the cartridge 590 when the beveled side 592 is down and would prevent placing the spool 590 completely onto the spindle with the non-beveled side down (the orientation shown in FIGURE 15). Such a machine might have a beveled annular rib about the spindle complementary to bevel 592 on spool 590 and providing only a minimum clearance when the spool 590 was in operative position on the spindle with its beveled side down. The rib would then engage the non-beveled side of spool 590 to prevent placing the spool 590 on the spindle with the non-beveled side down. Alternatively, a similar mechanism may be used to prevent loading of a cartridge such as shown in FIGURE 15 with its beveled flange 595 down, the orientation of the cartridge shown in FIGURE 15 then being the correct orientation. For example, abutments may be provided which fit the spool cross section when it is inserted correctly but stop its entry if the spool is inserted upside down. For a spool such as shown in FIGURE 15, the opening 531 in FIGURE 14 may be shaped to conform to the cross section of spool 590 in the upright orientation shown in FIGURE 15, so that the spool could not be moved through opening 531 by slide bars 449 and 450 if the spool 590 is upside down. That is, flange 593 if uppermost would engage the wall of receptacle 530, while flange 595 if uppermost would clear the wall by virtue of its bevel at 592 to which the contour of opening 531 would conform. The machine of FIGURE 14 would of course have a drive mechanism 420 which would not be damaged by blockage of slide 410 in this manner. With a machine such as shown in my copending application Serial No. 801,403 which is manually loaded by sliding a cartridge laterally along a deck plate and through a lateral opening in a cover structure, such lateral opening may have a configuration to admit a cartridge only in the desired orientation in the same manner as just described for opening 531 in FIGURE 14.

It will be apparent that many further modifications and variations may be effected without departing from the scope of the novel concepts of the present invention.

I claim as my invention:

1. A record transducing machine for transducing a signal recorded on a record medium comprising take-up spool means adapted to be power driven to wind a record medium thereon, supply means for rotatably supporting a record medium thereon in a spiral coil for unwinding of the record medium from the coil as it is wound on said take-up spool means and adapted to be power driven for winding the record medium back into a spiral coil thereon as it is unwound from said take-up spool means, said take-up spool means having a slot extending inwardly from the radially outermost margin thereof for accommodating edgewise insertion into said slot of a tape-like end portion of the record medium which is initially wound in a spiral coil on said supply means, and means for retaining said end portion in said slot, said retaining means being operative to automatically release said end portion of said record medium as the record medium is wound back into a spiral coil on said supply means, said supply means comprising a cartridge for receiving said spiral coil of said record medium and having means for holding said tape-like end portion securely therewith, and tuck-in means operatively associated with said cartridge and operative for pressing said end portion into engagement with said holding means of said cartridge as the end portion is wound back into a spiral coil on said cartridge.

2. A record transducing machine comprising a supply spindle, a single spool cartridge for mounting on said spindle having a record medium wound thereon and having a tape-like leader secured to the end of said record medium and being transversely flexible, said single spool cartridge having holding means for engaging said leader when the same is wound on said cartridge to retain the leader in fixed relation thereto, engaging means having a smooth rounded extended surface operative to flex said leader transversely to engage said leader with the holding means on said cartridge during winding of the leader onto said cartridge by means of said supply spindle, said machine having a load condition during which removal of the cartridge from the supply spindle is to be accommodated and having a rewind condition during which said engaging means obstructs removal of the cartridge, and mechanical means responsive to placing of said machine in said load condition for automatically shifting said engaging means relative to said supply spindle to clear said cartridge for removal from the machine.

3. A record transducing machine comprising a supply spindle, a single spool cartridge for mounting on said spindle having a record medium wound thereon and having a tape-like leader secured to the end of said record medium, said single spool cartridge having holding means for engaging said leader when the same is wound on said cartridge to retain the leader in fixed relation thereto, and engaging means operative to engage said leader with the holding means of said cartridge during winding of the leader onto said cartridge by means of said supply spindle, said supply spindle and said engaging means being relatively movable to space said engaging means from said cartridge for accommodating removal of said cartridge from said supply spindle, and said spindle and engaging means being relatively movable into an operative relationship where said engaging means is in close relation to said cartridge for engaging said leader with said holding means of said cartridge during winding of said leader onto said cartridge.

4. A recording transducing machine comprising a supply spindle, a single spool cartridge for mounting on said spindle having a record medium wound thereon and having a transversely flexible tape-like leader secured to the end of said record medium, said single spool cartridge

having holding means for engaging said leader when flexed transversely and wound on the cartridge to retain the leader in fixed relationship thereto, take-up spool means for winding the record medium thereon as it is unwound from said single spool cartridge, said take-up spool means having a slot extending inwardly from the radially outermost margin thereof for accommodating edgewise insertion of said leader into said slot, means for retaining said leader in said slot to accommodate winding of the record medium on said take-up spool means, and engaging means operatively associated with said cartridge for transversely flexing said leader to engage it with said holding means of said cartridge during winding of said leader back onto said cartridge from said take-up spool means.

5. A record transducing machine comprising a single spool cartridge having a record medium wound thereon and having a tape leader secured to the end of the record medium, said leader having eye means adapted for coupling the tape leader with a threading leader of an automatic threading single spool machine, and take-up spool means having a slot accommodating edgewise insertion of said tape leader into said slot, and said take-up spool means having a detent acting in said slot for engaging the eye means of the tape leader to interlock said tape leader with said take-up spool means to accommodate winding of the record medium on said take-up spool means.

6. A single spool cartridge assembly comprising a single spool having a record medium wound thereon and having a tape-like leader connected to the end of the record medium, said spool having confronting peripheral shoulder portions spaced apart an axial distance sufficient to readily pass the record medium, and said leader tapering from a width greater than the axial spacing of said shoulder portions to a width adapted to freely pass between said shoulder portions to facilitate engagement of the relatively wider end of the leader behind said shoulder portions to retain the leader with said spool.

7. A record transducer machine comprising a single spool cartridge having a tape record medium wound thereon and having a tape-like leader secured to the end of the record medium, said leader having a maximum width substantially greater than the maximum width of said tape record medium, said spool having means engageable with said leader for retaining the leader on the single spool cartridge while accommodating relatively free unwinding of the tape record medium from the cartridge, and take-up spool means for receiving the record medium from the single spool cartridge and winding the record medium thereon as it is unwound from the cartridge, and said take-up spool means having a retaining means carried thereby for coating with said leader to retain the leader when manually engaged therewith to facilitate winding of the record medium on said take-up spool means, said leader consisting essentially only of a tape-like member which is laterally and longitudinally flexible while being substantially free of any preset curvature in the longitudinal direction at its free end, and said retaining means directly engaging said free end of said leader.

8. A record transducer machine comprising a single spool cartridge having a tape record medium wound thereon and having a tape-like leader secured to the end of the record medium, said leader having a maximum width substantially greater than the maximum width of said tape record medium, said spool having means engageable with said leader for retaining the leader on the single spool cartridge while accommodating relatively free unwinding of the tape record medium from the cartridge, and take-up spool means for receiving the record medium from the single spool cartridge and winding the record medium thereon as it is unwound from the cartridge, and said take-up spool means having a retaining means carried thereby for coacting with said leader to retain the leader when manually engaged therewith to facilitate winding of the record medium on said take-up spool means, said take-up spool means having flanges spaced apart an axial distance greater than the maximum width of said leader to freely receive the leader on said take-up spool means and having a hub centrally thereof on which said leader is wound, and said retaining means being located within said hub and directly engaging the free end of said tape-like leader itself.

9. An automatic threading single spool cartridge machine comprising a threading leader having a hook, a single spool cartridge having a leader secured to the record medium thereon with eye means formed in the end of said leader, and means for pressing said hook against the outer convolution of said threading leader for automatic engagement of the hook with said eye means upon reverse rotation of the cartridge relative to said hook.

10. An automatic threading single spool cartridge machine comprising a threading leader having a hook, a single spool cartridge having a leader secured to the record medium thereon with eye means formed in the end of said leader, and means for pressing said hook against the outer convolution of said threading leader for automatic engagement of said eye means with said hook upon reverse rotation of the cartridge relative to said hook, said eye means comprising an embossment in said cartridge leader providing a radially outwardly projecting hook-engaging free edge and a hook-engaging sloping surface extending generally radially inwardly from said free edge.

11. An automatic threading single spool cartridge machine comprising a threading leader having a hook, a single spool cartridge having a leader secured to the record medium thereon with eye means formed in the end of said leader, and means for pressing the hook against the outer convolution of said threading leader for automatic engagement of said eye means with said hook upon reverse rotation of the cartridge relative to said hook, said eye means comprising an embossment in said cartridge leader providing a radially outwardly projecting hook-engaging free edge and a hook-engaging sloping surface extending generally radially inwardly from said free edge, and said hook having a turned free end portion disposed to extend in generally parallel relation to the sloping engagement face of said embossment and having a length generally corresponding to the length of said sloping engagement face to provide a neat coupling between the threading leader and the cartridge leader.

12. A single spool cartridge transducer machine comprising a supply spindle defining an operative position for a single spool cartridge, sensing means responsive to the configuration of said cartridge and controlling operation of said machine in the recording mode, means for resiliently urging said sensing means toward said operative position, and means for maintaining said sensing means away from said operative position until said machine is switched to recording mode.

13. A single spool cartridge having annularly disposed rib means projecting from one side and complementary annularly disposed recess means at the other side thereof of dimensions exceeding the related dimensions of said rib means to accommodate nesting of a plurality of such cartridges.

14. A spool construction for a record transducing machine comprising a hub portion on the periphery of which a record medium is to be wound, said hub portion having a slot opening at at least one side thereof and extending into said hub portion to accommodate edgewise insertion of a tape-like end portion of the record medium into said slot preparatory to winding of the record medium onto the periphery of said hub portion, and said slot extending radially inwardly from the periphery of said hub portion and having at least one bend therein tending to retain the tape-like end portion in said slot during winding on the record medium on said hub portion, said end portion of the record medium consisting essentially only of a tape-like member which itself is held by said bend in said slot.

15. A record medium leader for facilitating engagement

of a record medium with a spool having a retaining slot with a bend therein, comprising a tape-like member having one end for connection with an elongated record medium and having an opposite end for fitting into said retaining slot, said opposite end of said leader having a pre-formed bend therein corresponding to the bend in the retaining slot to fit freely into said slot in the edgewise direction but to resist being pulled longitudinally out of said slot.

16. A cartridge for storing an elongated record medium having means at its opposite sides for nesting engagement with identical cartridges irrespective of the relative angular positions of the cartridges to be nested therewith.

17. A cartridge for a single spool cartridge machine comprising a spool having a record medium thereon and having a leader secured to the record medium with eye means formed in the end of said leader and disposed for automatic engagement with a threading leader of the machine, said eye means comprising an embossment in said cartridge leader offset a substantial distance to one side of the remainder of the leader and providing a radially outwardly projecting free edge and a sloping surface extending generally radially inwardly from said free edge.

18. A single spool cartridge transducing machine comprising a single spool cartridge having a record medium wound thereon and having a transversely flexible leader secured to the end of the record medium and wrapped thereabout and terminating in a free end frictionally held by said cartridge and prevented from unwinding from said cartridge without transverse flexure thereof, and means on the machine for engaging and transversely flexing the free end of said leader to strip the same from said cartridge for threading thereof in the machine, said cartridge together with said leader when wound thereon and held by said cartridge substantially completely enclosing said record medium.

19. A transducer assembly comprising

(a) an automatic threading transducer machine having a transducing path for receiving an elongated record medium during transducing operation of the machine with respect to said record medium,

(b) said machine having means for mounting a single spool cartridge with an elongated record medium would thereon, said mounting means defining an operative position for said single spool cartridge thereon,

(c) means on said machine for receiving a series of single spool cartridges for successive delivery to said operative position on said mounting means,

(d) reciprocating transfer means on said machine reciprocably movable and operable during each reciprocation thereof to eject a cartridge from said operative position and to deliver a new cartridge from said receiving means to said operative position, and

(e) means on said machine for automatically threading the record medium from a cartridge at said operative position along said transducing path of said machine to provide for a transducing operation with respect to said record medium.

20. A transducer assembly comprising

(a) an automatic threading transducer machine having a transducing path for receiving an elongated record medium during transducing operation of the machine with respect to said record medium, said machine including means for mounting a single spool cartridge having an elongated record medium wound thereon during unwinding of the record medium therefrom, said mounting means defining an operative position for said single spool cartridge thereon, and means for automatically threading the record medium from a cartridge on said mounting means along said transducing path of said machine to provide for a transducing operation with respect to said record medium,

(b) means on said machine for mounting a series of single spool cartridges for successive delivery to said operative position on said mounting means, and

(c) means for ejecting a cartridge from said operative position and for simultaneously moving a cartridge from said series of cartridges toward said operative position.

21. A transducer assembly comprising

(a) an automatic threading transducing machine having a transducing path for receiving an elongated record medium during transducing operation of the machine with respect to said record medium, said machine including means for mounting a single spool cartridge having an elongated record medium wound thereon during unwinding of the record medium therefrom, said mounting means defining an operative position for said single spool cartridge thereon, and means for automatically threading the record medium from a cartridge on said mounting means along said transducing path of said machine,

(b) means on said machine for mounting a series of single spool cartridges in laterally offset relation to said operative position for successive delivery to said operative position on said mounting means,

(c) mechanical transfer means for engaging the successive cartridges of said series on said machine and movable in a lateral direction for moving the cartridges successively to said operative position, and

(d) said automatic threading means comprising engaging means movable into the space occupied by a cartridge in operative position thereof for engaging the end of the record medium, and means providing for retraction of said engaging means from said space prior to delivery of a cartridge to said operative position by said mechanical transfer means.

22. A record cartridge transducing assembly comprising

(a) a record cartridge transducing machine having means for receiving a record cartridge in an operative position and for carrying out a transducing operation with respect to a record in the cartridge at said operative position,

(b) said machine having first receptacle means for holding a series of cartridges and for delivering the cartridges in succession to a transfer position,

(c) mechanical means on said machine for automatically ejecting cartridges from said operative position and for automatically delivering successive cartridges from said transfer position of said first receptacle means to said operative position, and

(d) second receptacle means on said machine for receiving successive cartridges as they are ejected from said operative position by said mechanical means and for storing a series of said cartridges therein.

23. A record cartridge transducing assembly comprising

(a) a record cartridge transducing machine having means for receiving a record cartridge in an operative position and for carrying out a transducing operation with respect to a record in the cartridge at said operative position,

(b) said machine having first receptacle means for holding a series of cartridges and for delivering the cartridges in succession to a transfer position,

(c) mechanical means on said machine for automatically ejecting cartridges from said operative position and for automatically delivering successive cartridges from said transfer position of said first receptacle means to said operative position,

(d) second receptacle means on said machine for receiving successive cartridges as they are ejected from said operative position by said mechanical means and for storing a series of said cartridges therein, and

(e) said second receptacle means comprising a holder for a series of cartridges and said holder being detachably mounted on said machine.

24. A record cartridge transducing assembly comprising

(a) a record cartridge transducing machine having means for receiving a record cartridge in an operative position and for carrying out a transducing operation with respect to a record in the cartridge at said operative position,

(b) said machine having first receptacle means for holding a series of cartridges and for delivering the cartridges in succession to a transfer position,

(c) mechanical means on said machine for automatically ejecting cartridges from said operative position and for automatically delivering successive cartridges from said transfer position of said first receptacle means to said operative position,

(d) second receptacle means on said machine for receiving successive cartridges as they are ejected from said operative position by said mechanical means and for storing a series of said cartridges therein,

(e) said first receptacle means comprising a holder for a series of cartridges and said holder being detachably mounted on said machine, and

(f) said second receptacle means comprising a holder for a series of cartridges and said holder being detachably mounted on said machine,

(g) the holders of said first and second receptacle means being interchangeable and the cartridges received by the holder of the second receptacle means being in the same orientation as the cartridges in the holder of the first receptacle means.

25. A record cartridge transducing assembly comprising

(a) a record cartridge transducing machine having means for receiving a record cartridge in an operative position and for carrying out a transducing operation with respect to a record in the cartridge at said operative position,

(b) said machine having first receptacle means for holding a series of cartridges and for delivering the cartridges in succession to a transfer position,

(c) mechanical means on said machine for automatically ejecting cartridges from said operative position and for automatically delivering successive cartridges from said transfer position of said first receptacle means to said operative position,

(d) second receptacle means on said machine for receiving successive cartridges as they are ejected from said operative position by said mechanical means and for storing a series of said cartridges therein,

(e) said receptacle means each comprising a holder for storing a stack of cartridges therein, said holders being detachably engageable with said machine and having releasable means at the lower end thereof for holding said cartridges therein when the holders are detached from said machine, and

(f) said first receptacle means having means for automatically shifting the releasable means of the holder thereof to a release position upon engagement of said holder with said machine to accommodate delivery of the successive cartridges in said holder by gravity to said transfer position.

26. A single spool cartridge transducer assembly comprising

(a) an automatic threading single spool transducer machine for receiving a single spool cartridge at an operative position, automatically threading the record medium from the cartridge along a transducing path, carrying out a transducing operation thereon and rewinding the record medium back onto said cartridge, and

(b) mechanical means for ejecting cartridges from said operative position of said machine comprising a reciprocating mechanism having leading edges for engaging the perimeter of a cartridge at said operative position at opposite sides of the central axis of said cartridge and having upper elongated edges generally flush with the upper surface of a cartridge at said operative position and extending in the direction of movement of the mechanical means for supporting a cartridge above the level of said operative position during at least a portion of the cycle of operation of said mechanical means.

27. A record cartridge transducing assembly comprising

(a) a record cartridge transducing machine having means for receiving a record cartridge in an operative position and for carrying out a transducing operation with respect to a record in the cartridge at said operative position,

(b) means for storing a stack of said cartridges at a level above said operative position for successive delivery by gravity to a transfer position, and

(c) mechanical means for ejecting a cartridge from the operative position comprising a reciprocating mechanism having means for engaging an edge of the cartridge at the operative position for sliding of the cartridge in an edgewise direction out of said operative position and having means extended in the direction of movemnt of said mechanical means for supporting said stack of cartridges during at least a portion of a cycle of operation of said mechanical means.

28. A container for a series of cartridges comprising

(a) an elongated cartridge retaining body having first and second opposite ends and having means defining an interior space extending from the first end to the second end thereof for laterally confining a series of cartridges therein,

(b) releasable means disposed entirely interiorly of said body at the second end thereof for releasably retaining the cartridges therein against displacement from said second end of said body, and

(c) said releasable means having actuating means therefore disposed substantially entirely within said body for actuation by application of said body to a receptacle to release said releasable means.

29. A container for a series of cartridges comprising

(a) an elongated cartridge retaining body having first and second opposite ends and having means defining an interior space extending from the first end to the second end thereof for laterally confining a stack of cartridges therein,

(b) said body having an opening at said second end thereof and having recess means at said second end thereof adjacent said opening and communicating with said interior space,

(c) cartridge abutment means movably mounted at said second end of said body and extending from said recess means into said interior space, said cartridge abutment means in one position thereof extending at least partially out of said recess means and occupying an obstructing position preventing passage of cartridges through said opening and in a retracted position being substantially completely within said recess means and clear of said opening to accommodate delivery of cartridges successively through said opening to the exterior of said body, and

(d) said abutment means having actuating means therefor engageable to shift said abutment means from said obstructing position to said retracted position, and said actuating means being disposed entirely within the confines of said body.

30. A record cartridge transducing assembly comprising

(a) a record cartridge transducing machine having means for receiving a record cartridge in an operative position thereof and for carrying out a transducing operation with respect to a record in the cartridge at said operative position,

(b) a container for a series of cartridges, said container being detachably engageable with said machine and having releasable holding means for holding said cartridges therein, and

(c) receiving means on said machine for sliding frictional engagement with said container to automatically retain said container therewith and to automatically release said releaseable holding means both solely in response to a pressing of said container onto said receiving means without any other manual operations.

31. A container for a series of single spool cartridges comprising

(a) an elongated cartridge retaining body having first and second opposite ends and having means defining an interior space extending from the first end to the second end for laterally confining a stack of single spool cartridges therein,

(b) said body having an opening at said second end providing for delivery of said cartridges from said body, said second end having a rabbet groove opening interiorly of said body, and

(c) spring fingers secured to said body within said groove and normally extending into said interior space for retaining cartridges in said body but being deflectable into said groove to provide for discharge of said cartridges through said opening at said second end of said body.

32. A container for a series of single spool cartridges comprising

(a) an elongated cartridge retaining body having first and second opposite ends and having means defining an interior space extending from the first end to the second end for laterally confining a stack of single spool cartridges therein,

(b) said body having an opening at said second end providing for delivery of said cartridges from said body, said second end having a rabbet groove opening interiorly of said body,

(c) spring fingers secured to said body within said groove and normally extending into said interior space for retaining cartridges in said body but being deflectable into said groove to provide for discharge of said cartridges through said opening at said second end of said body,

(d) said one end of said body having an annular lip projecting axially therefrom of outside diameter substantially equal to the outside diameter of said groove to nest in the groove of an identical container and retract the spring fingers thereof when nested therewith.

33. A transducer assembly comprising

(a) a stack of single spool cartridges each having an elongated record medium wound thereon and retained therewith for automatic threading,

(b) an automatic threading transducer machine having a transducing path for receiving an elongated record medium during transducing operation of the machine with respect to said record medium,

(c) said machine having a spindle for mounting a single spool cartridge for rotation on a vertical axis and defining an operative position for said single spool cartridge,

(d) means on said machine offset horizontally from said spindle by at least a distance equal to a horizontal dimension of said cartridges for holding said stack of a single spool cartridges in a vertical disposition for successive delivery to said operative position on said mounting means,

(e) reciprocating transfer means on said machine having a part thereof reciprocably movable in a horizontal plane from a position for engaging the lowermost cartridge of the stack at said holding means to a position for placing such cartridge in vertical alignment with said spindle and having a further part reciprocably movable to eject a cartridge from the operative position, said reciprocating transfer means being operable during each reciprocation thereof to eject a cartridge from said operative position and to deliver a new cartridge from said holding means to said operative position, and

(f) means on said machine for automatically engaging the successive cartridges delivered to said operative position with said spindle, for automatically threading the record medium from a cartridge engaged with said spindle along said transducing path of said machine to provide for a transducing operation with respect to said record medium, and for automatically disengaging the spindle from said cartridge prior to ejection thereof.

34. A transducer assembly comprising

(a) an automatic threading transducer machine having a transducing path for receiving an elongated second medium during transducing operation of the machine with respect to said record medium, said machine including mounting means for engaging with and mounting a single spool cartridge having an elongated record medium wound thereon during unwinding of the record medium therefrom, said mounting means defining an operative position for said single spool cartridge thereon, and means for automatically threading the record medium from a cartridge engaged with said mounting means along said transducing path of said machine to provide for a transducing operation with respect to said record medium,

(b) a vertical stack of single spool cartridges mounted on the machine for successive delivery to said operative position on said mounting means,

(c) means for ejecting a cartridge from said operative position and for simultaneously moving the lowermost cartridge from said stack of cartridges toward said operative position, and

(d) means for automatically engaging said cartridge mounting means with the successive cartridges delivered thereto and for automatically disengaging each cartridge from said mounting means prior to ejection thereof from the operative position.

35. A transducer assembly comprising

(a) an automatic threading transducing machine having a transducing path for receiving an elongated record medium during transducing operation of the machine with respect to said record medium, said machine including mounting means for engaging with and mounting a single spool cartridge having an elongated record medium wound thereon during unwinding of the record medium therefrom, said mounting means defining an operative position for said single spool cartridge thereon, and means for automatically threading the record medium from a cartridge on said mounting means along said transducing path of said machine,

(b) a vertical stack of single spool cartridges mounted on said machine in laterally offset relation to said operative position for successive delivery to said operative position on said mounting means,

(c) mechanical transfer means for engaging the successive cartridges of said stack on said machine and movable in a lateral direction for moving the cartridges successively to said operative position, and

(d) said mounting means comprising a spindle movable into the space occupied by a cartridge in operative position thereof for engaging therewith and means providing for retraction of said spindle from said space prior to delivery of a cartridge to said operative position by said mechanical transfer means.

36. A record cartridge transducing assembly comprising

(a) a single spool cartridge transducing machine hav-

ing means for receiving a cartridge in an operative position and for carrying out a transducing operation with respect to a record in the cartridge at said operative position,

(b) said machine having first receptacle means,

(c) a vertical stack of single spool cartridges in said first receptacle means for successive movement by gravity to a transfer position,

(d) mechanical means on said machine for automatically ejecting said cartridges from said operative position and for automatically delivering successive cartridges from said transfer position of said first receptacle means to said operative position, and

(e) second receptacle menas on said machine for receiving said single spool cartridges as they are ejected from said operative position by said mechanical means and for storing a vertical stack of said cartridges therein.

37. A record cartridge transducing assembly comprising

(a) a single spool cartridge transducing machine having means for receiving a cartridge in an operative position and for carrying out a transducing operation with respect to a record in the cartridge at said operative position,

(b) said machine having first receptacle means,

(c) a vertical stack of single spool cartridges in said first receptacle means for successive movement to a transfer position,

(d) mechanical means on said machine for automatically ejecting said cartridges from said operative position and for automatically delivering successive cartridges from said transfer position of said first receptacle means to said operative position,

(e) second receptacle means on said machine for receiving said cartridges as they are ejected from said operative position by said mechanical means and for storing said cartridges therein, and

(f) said second receptacle means comprising a holder for storing a stack of said cartridges and said holder being detachably mounted on said machine.

38. A record cartridge transducing assembly comprising

(a) a single spool cartridge transducing machine having means for receiving a cartridge in an operative position and for carrying out a transducing operation with respect to a record in the cartridge at said operative position,

(b) said machine having first receptacle means,

(c) a vertical stack of single spool cartridges in said first receptacle means for successive delivery to a transfer position,

(d) mechanical means on said machine for automatically ejecting said cartridges from said operative position and for automatically delivering successive cartridges from said transfer position of said first receptacle means to said operative position,

(e) second receptacle means on said machine for receiving successive cartridges as they are ejected from said operative position by said mechanical means and for storing a series of said cartridges therein,

(f) said first receptacle means comprising a holder for a stack of said cartridges and said holder being detachably mounted on said machine, and

(g) said second receptacle means comprising a holder for a stack of said cartridges and said holder being detachably mounted on said machine,

(h) the holders of said first and second receptacle means being interchangeable and the cartridges received by the holder of the second receptacle means being in the same orientation as the cartridges in the holder of the first receptacle means.

39. A record cartridge transducing assembly comprising

(a) a single spool cartridge transducing machine having means for receiving a cartridge in an operative position and for carrying out a transducing operation with respect to a record in the cartridge at said operative position,

(b) a vertical stack of single spool cartridges,

(c) said machine having first receptacle means for holding said stack of cartridges and for delivering the cartridges in succession to a transfer position,

(d) mechanical means on said machine for automatically ejecting cartridges from said operative position and for automatically delivering successive cartridges from said transfer position of said first receptacle means to said operative position,

(e) second receptacle means on said machine for receiving successive cartridges as they are ejected from said operative position by said mechanical means and for storing a series of said cartridges therein,

(f) said receptacle means each comprising a holder for storing a stack of said cartridges herein, said holders being detachably engageable with said machine and having releasable means at the lower end thereof for holding said cartridges therein when the holders are detached from said machine, and

(g) said first receptacle means having means for automatically shifting the releasable means of the holder thereof to a release position upon engagement of said holder with said machine to accommodate delivery of the successive cartridges in said holder by gravity to said transfer position.

40. A single spool cartridge transducer assembly comprising

(a) a single spool cartridge,

(b) an automatic threading single spool transducer machine receiving said single spool cartridge at an operative position,

(c) means for automatically threading the record medium from the cartridge along a transducing path, carrying out a transducing operation thereon and rewinding the record medium back onto said cartridge, and

(d) mechanical means for ejecting said cartridge from said operative position of said machine comprising a reciprocating mechanism having leading edges for engaging the perimeter of said cartridge at said operative position at opposite sides of the central axis of said cartridge and having upper elongated edges generally flush with the upper surface of said cartridge at said operative position and extending in the direction of movement of the mechanical means for supporting a cartridge above the level of said operative position during at least a portion of the cycle of operation of said mechanical means.

41. A record cartridge transducing assembly comprising

(a) a single spool cartridge transducing machine having means for receiving a cartridge in an operative position and for carrying out a transducing operation with respect to a record in the cartridge at said operative position,

(b) a stack of single spool cartridges,

(c) means for storing said stack of cartridges at a level above said operative position for successive delivery by gravity to a transfer position, and

(d) mechanical means for ejecting a cartridge from the operative position comprising a reciprocating mechanism having means for engaging an edge of the cartridge at the operative position for sliding of the cartridge in an edgewise direction out of said operative position and having means extended in the direction of movement of said mechanical means for supporting said stack of cartridges during at least a portion of a cycle of operation of said mechanical means.

42. A container for a series of cartridges comprising
(a) an elongated cartridge retaining body having first and second opposite ends and having means defining an interior space extending from the first end to the second end thereof,
(b) a stack of single spool cartridges laterally confined within said body,
(c) releasable means disposed entirely interiorly of said body at the second end thereof and releasably retaining the cartridges therein against displacement from said second end of said body,
(d) said releasable means having actuating means therefor disposed substantially entirely within said body, and
(e) a receptacle for said body having means engageable with said actuating means to release said releasable means and automatically operable to engage said actuating means in response to placing said body on said receptacle.

43. A container for a series of cartridges comprising
(a) an elongated cartridge retaining body having first and second opposite ends and having means defining an interior space extending from the first end to the second end thereof,
(b) a stack of single spool cartridges laterally confined in said body,
(c) said body having an opening at said second end thereof and having recess means at said second end thereof adjacent said opening and communicating with said interior space,
(d) cartridge abutment means movably mounted at said second end of said body and extending from said recess means into said interior space, said cartridge abutment means in one position thereof extending at least partially out of said recess means and occupying an obstructing position preventing passage of said cartridges through said opening and in a retracted position being substantially completely within said recess means and clear of said opening to accommodate delivery of said cartridges successively through said opening to the exterior of said body, and
(e) said abutment means having actuating means therefor engageable to shift said abutment means from said obstructing position to said retracted position, and said actuating means being disposed entirely within the confines of said body.

44. A record cartridge transducing assembly comprising
(a) a single spool cartridge transducing machine having means for receiving a cartridge in an operative position thereof and for carrying out a transducing operation with respect to a record in the cartridge at said operative position,
(b) a stack of single spool cartridges,
(c) a container retaining said stack of cartridges, said container being detachably engageable with said machine and having releasable holding means for holding said cartridges therein, and
(d) receiving means on said machine for sliding frictional engagement with said container to automatically retain said container therewith and to automatically release said releasable holding means both solely in response to a pressing of said container onto said receiving means without any other manual operations.

45. A container for a series of single spool cartridges comprising
(a) an elongated cartridge retaining body having first and second opposite ends and having means defining an interior space extending from the first end to the second end,
(b) a stack of single spool cartridges laterally confined in said body,

(c) said body having an opening at said second end providing for delivery of said cartridges from said body, said second end having a rabbet groove opening interiorly of said body, and
(d) spring fingers secured to said body within said groove and normally extending into said interior space for retaining said cartridges in said body but being deflectable into said groove to provide for discharge of said cartridges through said opening at said second end of said body.

46. A container for a series of single spool cartridges comprising
(a) an elongated cartridge retaining body having first and second opposite ends and having means defining an interior space extending from the first end to the second end,
(b) a stack of single spool cartridges laterally confined in said body,
(c) said body having an opening at said second end providing for delivery of said cartridges from said body, said second end having a rabbet groove opening interiorly of said body,
(d) spring fingers secured to said body within said groove and normally extending into said interior space for retaining said cartridges in said body but being deflectable into said groove to provide for discharge of said cartridges through said opening at said second end of said body,
(e) said first end of said body having an annular lip projecting axially therefrom of outside diameter substantially equal to the outside diameter of said groove to nest in the groove of an identical container and retract the spring fingers thereof when nested therewith.

47. In combination a transducer machine having a sensing means for controlling operation of the machine, and a single spool cartridge comprising a spool having peripheral confronting shoulder portions for retaining an enlarged width portion of a record medium wound thereon and having an annular recess in one axial side only thereof for coaction with said sensing means to differentially control operation of said transducing machine depending on the side of said cartridge disposed toward said sensing means when the cartridge is operatively associated with the machine.

48. In combination a transducing machine having sensing means for controlling operation of the machine, and a single spool cartridge having one flange of different cross section than the other to signal visually and tactily the correct upright orientation of said cartridge and having an annular recess in one axial side only thereof for coaction with said sensing means to control operation of said transducing machine when the cartridge is operatively associated therewith.

References Cited by the Examiner

UNITED STATES PATENTS

553,757	1/96	Lipphardt et al.	221—238
570,113	10/96	Wilson et al.	221—307
1,330,639	2/20	Leumann	221—293
1,637,549	8/27	Chandler	133—1
1,655,297	1/28	Thornton	242—74 X
1,766,298	6/30	Macke	221—238
1,820,345	8/31	Cherry	221—293
1,830,805	11/31	Myer	221—297
1,855,441	4/32	Crouse	221—297
1,871,234	8/32	Proctor	242—74
1,950,382	3/34	Benson	221—297
2,032,214	2/36	Howell	242—74
2,073,328	3/37	Wasserlein	221—297
2,149,098	2/39	Phinney	221—293
2,211,511	8/40	Melzer et al.	221—238
2,253,482	8/41	Forsthoefel et al.	221—238

(Other references on following page)

UNITED STATES PATENTS

2,361,364	10/44	Bell	221—293
2,406,900	9/46	Punte	220—97
2,413,304	12/46	Fry	221—238
2,468,767	5/49	Lloyd	242—71.8
2,518,294	8/50	Dennis et al.	221—293
2,574,883	11/51	Medal	242—71.8
2,778,880	1/57	Eash	242—55.19 X
2,834,507	5/58	Metzler et al.	220—97
2,926,813	3/60	Marion	221—307
2,926,861	3/60	Steelman	242—55.13
2,951,654	9/60	Murdoch	242—55.13
2,955,724	10/60	Deucher	221—287

2,998,878	9/61	Biedinger et al.	242—71.8
3,006,650	10/61	Ellmore.	
3,026,057	3/62	Horimura	242—57
3,090,574	5/63	Doncaster et al.	242—55.13
3,100,090	8/63	Goodell et al.	242—55.13

FOREIGN PATENTS

1,115,242	4/56	France.
2,261	2/99	Great Britain.

RUSSELL C. MADER, *Primary Examiner.*

HARRISON R. MOSELEY, LOUIS J. DEMBO, MERVIN STEIN, *Examiners.*