May 21, 1968 O. C. PALMER 3,383,921

GOLF PRACTICE DEVICE

Filed Aug. 29, 1966 2 Sheets-Sheet 1

FIG. 1.

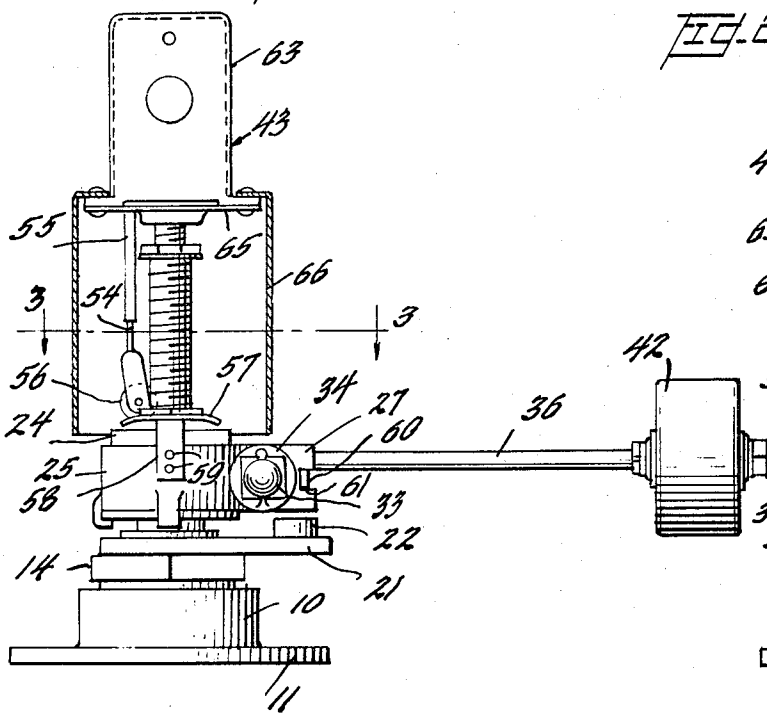


FIG. 2.

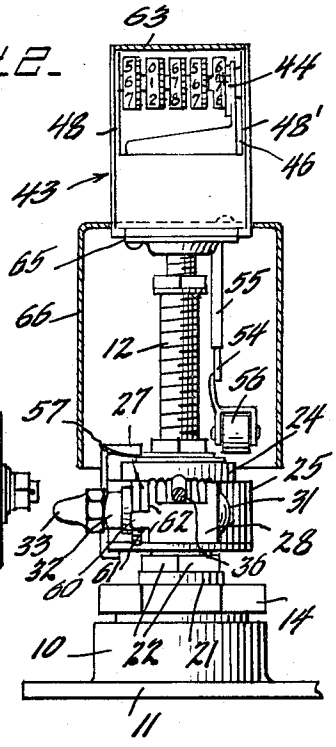


FIG. 3.

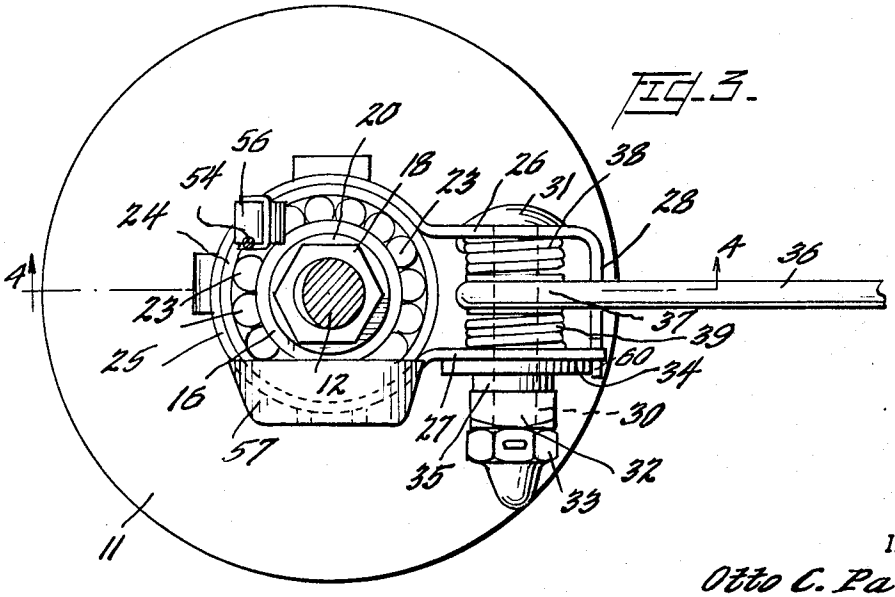


INVENTOR.

Otto C. Palmer

BY

Watson, Cole, Grindle & Watson,

ATTORNEYS

May 21, 1968 O. C. PALMER 3,383,921

GOLF PRACTICE DEVICE

Filed Aug. 29, 1966 2 Sheets-Sheet 2

FIG. 4.

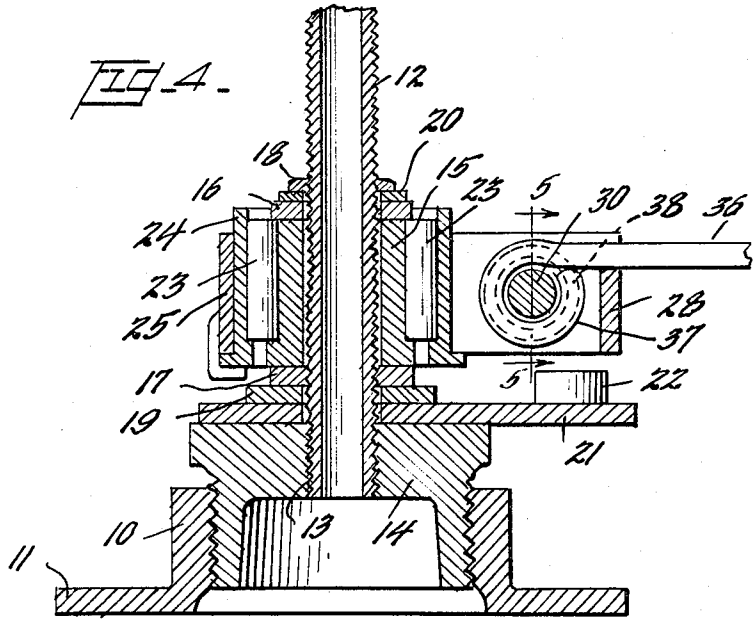


FIG. 6.

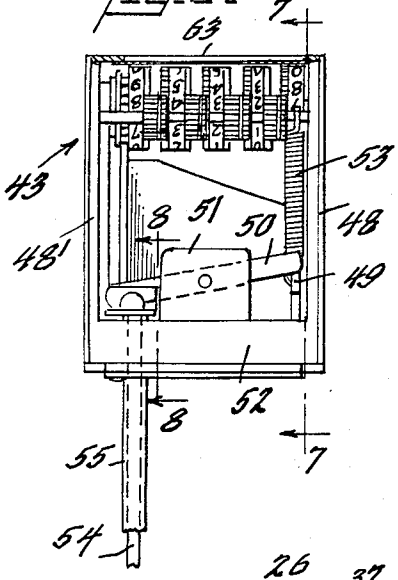


FIG. 7.

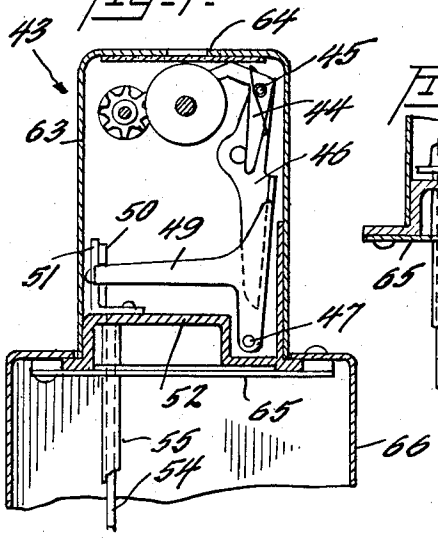


FIG. 8.

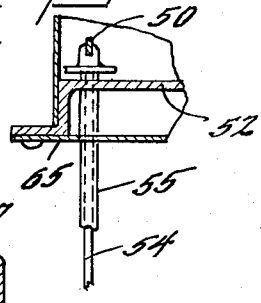


FIG. 5.

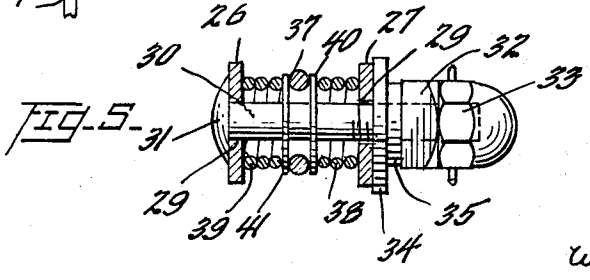


INVENTOR.
Otto C. Palmer
BY
Watson, Cole, Grindle + Watson,
ATTORNEYS

United States Patent Office 3,383,921 Patented May 21, 1968



3,383,921

# GOLF PRACTICE DEVICE

Otto C. Palmer, 1072 Carroll St.,
Brooklyn, N.Y. 11225

Filed Aug. 29, 1966, Ser. No. 575,807
6 Claims. (Cl. 73—379)

This invention relates to golf practice devices, and more particularly to a device permitting indoor and outdoor practice in the use of the driver or other long-distance golf clubs. More particularly, the invention relates to an improvement in golf practice devices of the type comprising essentially a captive ball or simulated ball which, upon impact by a driver or other club, is caused to rotate about a fixed axis, in an orbit of determined radius. Such devices may include means for counting the number of revolutions described by the ball or impact member.

In previous devices of the type broadly defined above, a principal defect has been that the device is easily broken or bent by the sudden imposition of the heavy forces involved in a full golf stroke. Thus, if the ball or impact member is supported on a member having substantial rigidity, such member may readily be broken by the force in question. On the other hand, if the supporting member is less rigid, it may be easily bent by the impact, requiring straightening or replacement and in such event, will not impart to the revolution counter or other recording device the true value of the golf stroke made.

Accordingly, it is an object of the present invention to provide a golf practice device of the type in question, comprising generally a vertical axle extending upwardly from a base member, an antifriction bearing carried on said axle and having an outer ring concentric with and rotatable thereabout, and means for supporting from said outer ring an elongated member carrying at its outer end a simulated golf ball or other impact member, the elongated member being so articulated with the said outer ring as to transmit thereto the full force of a blow against the impact member, without damage to the elongated member.

More particularly, it is an object of the invention to provide a golf practice device of the type defined in the preceding paragraph, in which the elongated support member for the impact member is articulated to the outer ring of the antifriction bearing in such a manner as to allow resilient angular displacement, in the direction of an applied force, of the elongated member relative to the said outer ring. A suitable means of practicing this feature of the invention is to provide a loose pivotal connection at the inner end of the elongated member, limited angular movement of the latter on its pivot being permitted by springs encircling the pivot on either side of the pivot eye of the elongated member.

It is a further object of the invention to provide a golf practice device of the type defined in which the member which embraces the aforesaid outer ring and provides a pivotal support for the aforesaid elongated member carries, also, a double ended cam for engagement with a cam follower roller carried on the adjacent end of a linkage which operates a revolution counter of the odometer type, or any suitable type. By this arrangement the impact member may be struck a blow in either direction and will still record the number of revolutions made by the impact member.

A further object is the provision of a device of the character defined, in which the elongated member is mounted for pivotal movement in the plane of the aforesaid vertical axis, whereby an upward component of the force applied to the impact member will be reflected by an upward pivoting of the elongated member which carries the impact member, without damage to the device, which will still register the number of revolutions corresponding to



the horizontal component of the said force. Downward pivoting of the elonagted member is limited by a suitable stop member.

A further object is the provision, in a device of the character described, of magnetic means constituting a "home" station for the elongated member, whereby it will normally come to rest at the same point in its orbital path, after each use.

Other and further objects, features and advantages will be apparent from the description which follows, read in connection with the accompanying drawings, in which:

FIGURE 1 is a side elevation of a device constructed in accordance with the invention, with a portion of the cover broken away to reveal the normally covered elements;

FIGURE 2 is a view similar to FIGURE 1 but at 90 degrees thereto;

FIGURE 3 is a section on line 3—3 of FIGURE 1;

FIGURE 4 is a section on line 4—4 of FIGURE 3;

FIGURE 5 is a section on line 5—5 of FIGURE 4;

FIGURE 6 is a side elevation of the revolution-counting mechanism, with a portion of the cover removed;

FIGURE 7 is a section on line 7—7 of FIGURE 6; and

FIGURE 8 is a section on line 8—8 of FIGURE 6.

In order to facilitate an understanding of the invention, reference is made to the embodiment thereof shown in the accompanying drawings and detailed descriptive langauge is employed. It will nevertheless be understood that no limitation of the invention is thereby intended and that various changes and alterations are contemplated such as would ordinarily occur to one skilled in the art to which the invention relates.

Referring now to FIGURES 1–4, the device of the present invention is carried on a base **10** provided with a flange **11** by means of which it may be secured to a stationary object so as to hold it in place and prevent it from moving. Due to the fairly large forces involved, it is, of course, essential that the device be installed in such as immovable manner. Secured centrally of the base **10** there is provided a vertical axle **12**, which is preferably threaded for easy adjustment of the other parts relative thereto. The axle **12** may be secured to the base **10** in any suitable fashion, FIGURE 4 being illustrative of one manner in which the device may be constructed. As there illustrated, the axle **12** is threaded into a central aperture **13** in a cap **14** which in turn is threaded into the cylindrical portion of the base **10**. The inner ring or race **15** of an antifriction bearing surrounds the axle **12** and is clamped immovably between washers **16** and **17** by means of nuts **18** and **19** threaded on the axle **12**. To prevent loosening of these parts it is preferable to insert a lock washer **20** between the nut **18** and the washer **16**. A magnet support member **21** is gripped between the nut **19** and the cap **14**, and is provided near its outer extremity with one or more strong permanent magnets **22**.

The inner ring **15** of the aforementioned antifriction bearing is encircled by a plurality of antifriction rollers **23**, which are in turn retained by an outer ring **24**. A clamp member **25** (FIGURE 3) surrounds and grips the outer ring **24**, and comprises two arms **26** and **27** which extend generally radially outward and generally parallel to each other, the arm **26** being provided with a right-angled extension **28** for a purpose hereinafter mentioned. The arms **26** and **27** are provided with suitable apertures **29** (FIGURE 5) to receive a bolt **30** having a head **31**. A nut **32** is threaded on the opposite end of the bolt **30** and is secured in any desired adjusted position by means of a lock nut **33**. Spring washers **34** and **35** are preferably placed between the nut **32** and the arm **27**.

An elongated ball-support member **36** provided at its inner end with an eye **37** is loosely supported on the bolt **30**, and is centered longitudinally thereof through the medium of helical springs **38** and **39** surrounding the bolt

on either side of the eye 37. Preferably the springs 38 and 39 are separated from the eye 37 by washers 40 and 41. The springs 38 and 39 are under compression, but not to such an extent as to be solid. Therefore, the elongated member 36 may have a limited angular movement relative to the bolt 30 on which it is pivoted, such movement being resiliently resisted by the springs 38 and 39. The elongated member 36 is normally maintained in a horizontal position by the extension 28 of the arm 26, which serves as a stop for this purpose, while at the same time permitting upward pivotal movement of the member 36 about the pivot bolt 30. As seen in FIGURE 1, the elongated member 36 carries at its outer end an impact member 42 which may be in the form of a simulated golf ball, or as in the illustrated embodiment, may take the form of a roller or rubber or other suitably resilient material, mounted in any suitable fashion on the member 36, preferably rotatably.

The clamp 25, including the arms 26 and 27, the bolt 30, springs 38, 39 and associated parts being formed of magnetic material, i.e., steel, will be subject to the magnetic field of the permanent magnets 22, and when the rotation of the several parts becomes sufficiently slow, after an impact, will be attracted to and centered over the magnets 22. In this manner the impact member 42 is repeatedly presented in the same position, so that it may be repeatedly struck by a user without the latter being required to change location relative to the practice device.

At the upper end of the axle 12 there is secured a revolution counter 43 of the odometer type, the details of which form no part of the present invention. The operating pawl 44 of the revolution counter (FIGURE 7) is pivoted at 45 on one arm 46 of a bell crank which in turn is pivoted at 47 to the side plate 48. The other arm 49 of the bell crank extends parallel to the side plates 48 and 48' of the enclosure for the revolution counter and is adapted to be engaged by a rock lever 50 (FIGURE 6) pivoted on lug 51 secured to the base 52 of the enclosure for the revolution counter. That end of the rock lever 50 which engages the arm 49 is normally biased upwardly by a tension spring 53. The opposite end of the rock lever 50 is articulated to the upper end of a vertical link or push rod 54 which extends downwardly through a sleeve 55 which extends through and is supported by the base 52. The link 54 carries at its lower end a cam follower roller 56 for cooperation with a double ended cam 57 (FIGURES 1 and 2) secured to the clamp member 25 by means of a strap 58 and screws 59. Upon rotation of the elongated member 36 and clamp 25 about the axle 12, in either direction, the cam follower roller 56 will be elevated momentarily by contact with the arcuate cam 57, thereby actuating the revolution counter through the linkage just described.

The enclosure for the revolution counter includes, in addition to the side plates 48, 49 and base 52, the U-shaped cover 63 which is apertured at 64 (FIGURE 7) to reveal the numbered wheels of the counter. The entire counter, including its enclosure, is supported on a horizontal plate 65 (FIGURE 1) at the upper end of the axle 12, which plate 65 may also support a cylindrical cover 66 for the axle 12 and cam mechanism 54, 56, 57.

Referring now to FIGURES 1, 2 and 3, it will be noted that the extension 28 of the arm 26 is provided with a narrow extremity 60 which extends through a notch 61 formed in the end of the arm 27. The shoulders 62 at the base of the extremity 60 form stops for preventing, by engagement with the arm 27, the over-compression of the springs 38 and 39, thus preventing them from being made solid by excessive tightening of the nut 32.



Having thus described the invention, what is claimed as new and desired to be secured by Letters Patent is:

1. In a golf practice device, in combination, a base, a vertical axle secured to and extending upwardly from said base, an antifriction bearing mounted on said axle and having an outer ring concentric with and rotatable about said axle, a clamp member embracing said ring and rotatable therewith, said clamp member comprising two arms extending generally radially outward and generally parallel to each other, adjustable connecting means extending between said arms for securing said clamp member on said outer ring and comprising a headed bolt and a nut, the head of said bolt engaging the outer side of one said arm and said bolt extending through said arms and said nut engaging said bolt at a point beyond the outer side of said other arm, an elongated member having an end pivotally engaging said bolt intermediate said arms, said elongated member extending generally radially outwardly, a coil spring surrounding said bolt on either side of said elongated member and inwardly of the adjacent arm, an impact member mounted at the other end of said elongated member, and means for preventing said elongated member from pivoting below a generally horizontal position.

2. The combination defined in claim 1, including means for mounting the revolutions made by said clamp member, elongated member and impact member about said axle when said impact member is struck.

3. The combination defined in claim 2, said last means comprising a revolution counter of the odometer type mounted at the upper end of said axle, linkage means extending downwardly from said counter and including a cam follower roller disposed in proximity to said clamp member, and cam means secured to said clamp member and positioned to engage said cam follower roller once in each revolution of said clamp member.

4. The combination defined in claim 1, said clamp member arms being formed of magnetic material, and said combination including permanent magnet means supported on said base and disposed closely below a point in the path of said clamp member arms, whereby said magnet means tends to attract said arms and thus establish a "home" position for said rotating parts.

5. The combination defined in claim 1, said last means comprising an extension of one of said arms, which extension projects horizontally from said arm, outwardly of and generally parallel to said bolt whereby to form a stop for downward pivotal movement of said elongated member.

6. The combination defined in claim 5, said extension further being formed and disposed so as to engage said other arm upon excessive tightening of said nut on said bolt, whereby said extension forms a stop to prevent over-compression of said springs.


References Cited

UNITED STATES PATENTS

| | | | |
|---|---|---|---|
| 1,808,309 | 6/1931 | Volk | 73—379 |
| 2,510,266 | 6/1950 | Taylor | 273—197 |

FOREIGN PATENTS

| | | |
|---|---|---|
| 16,310 | 7/1934 | Australia. |


RICHARD C. QUEISSER, *Primary Examiner.*

JOHN K. LUNSFORD, *Assistant Examiner.*