US0D1036711S

(12) **United States Design Patent** (10) **Patent No.: US D1,036,711 S**
Celano et al. (45) **Date of Patent: ** Jul. 23, 2024**

(54) **LIGHT-EMITTING DIODE PACKAGE**

(71) Applicant: **CreeLED, Inc.**, Durham, NC (US)

(72) Inventors: **Thomas Celano**, Cary, NC (US); **Alexis Rile**, Durham, NC (US); **Derek Miller**, Columbus, OH (US); **David Suich**, Durham, NC (US); **Colin Blakely**, Raleigh, NC (US); **Sarah Trinkle**, Broadway, NC (US); **Robert Wilcox**, Rolesville, NC (US)

(73) Assignee: **CreeLED, Inc.**, Durham, NC (US)

(**) Term: **15 Years**

(21) Appl. No.: **29/877,887**

(22) Filed: **Jun. 13, 2023**

Related U.S. Application Data

(62) Division of application No. 29/827,155, filed on Feb. 17, 2022, now Pat. No. Des. 996,377.

(51) **LOC (14) Cl.** **13-03**

(52) **U.S. Cl.**
USPC **D13/180**

(58) **Field of Classification Search**
USPC D13/180, 182; D26/1
(Continued)

(56) **References Cited**

U.S. PATENT DOCUMENTS

D573,554 S 7/2008 Kobayakawa
D575,244 S * 8/2008 Lee D13/180
(Continued)

FOREIGN PATENT DOCUMENTS

JP D1353072 A 3/2009
JP D1655194 A 3/2020
(Continued)

OTHER PUBLICATIONS

Examination Report for Taiwanese Patent Application No. 111303915, mailed Mar. 24, 2023, 4 pages.
(Continued)

Primary Examiner — Selina Sikder
(74) *Attorney, Agent, or Firm* — Withrow & Terranova, P.L.L.C.

(57) **CLAIM**

The ornamental design for a light-emitting diode package, as shown and described.

DESCRIPTION

FIG. **1** is a top perspective view of one embodiment of a light-emitting diode package;
FIG. **2** is a bottom perspective view of the light-emitting diode package of FIG. **1**;
FIG. **3** is a top view of the light-emitting diode package of FIG. **1**;
FIG. **4** is a bottom view of the light-emitting diode package of FIG. **1**;
FIG. **5** is an end view of the light-emitting diode package of FIG. **1**;
FIG. **6** is an opposing end view of the light-emitting diode package of FIG. **1**;
FIG. **7** is a side view of the light-emitting diode package of FIG. **1**;
FIG. **8** is an opposing side view of the light-emitting diode package of FIG. **1**;
FIG. **9** is a top perspective view of another embodiment of a light-emitting diode package;
FIG. **10** is a bottom perspective view of the light-emitting diode package of FIG. **9**;
FIG. **11** is a top view of the light-emitting diode package of FIG. **9**;
FIG. **12** is a bottom view of the light-emitting diode package of FIG. **9**;
FIG. **13** is an end view of the light-emitting diode package of FIG. **9**;
FIG. **14** is an opposing end view of the light-emitting diode package of FIG. **9**;
(Continued)

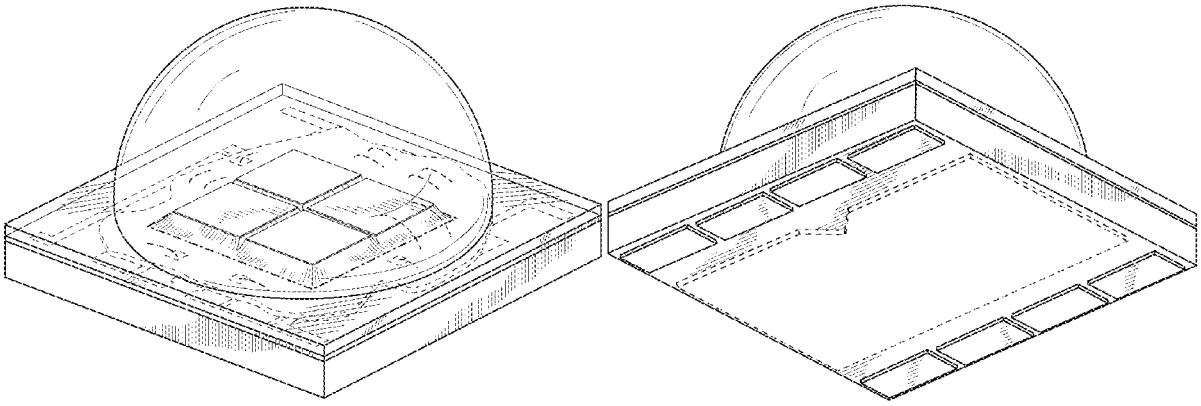

FIG. **15** is a side view of the light-emitting diode package of FIG. **9**; and,

FIG. **16** is an opposing side view of the light-emitting diode package of FIG. **9**.

The dashed broken lines shown in the drawings depict portions of the light-emitting diode package that form no part of the claimed design.

The dot-dashed broken lines shown in the drawings depict portions of the light-emitting diode package that represent boundaries of the claimed design and are not part of the claimed design.

1 Claim, 12 Drawing Sheets

(58) **Field of Classification Search**

CPC H01L 27/15; H01L 27/156; H01L 33/08; H01L 33/10; H01L 33/20; H01L 33/38; H01L 33/42; H01L 33/48; H01L 33/483; H01L 33/486; H01L 2223/5441; H01L 2223/54433; H01L 25/167; H01L 25/0753

See application file for complete search history.

(56) **References Cited**

U.S. PATENT DOCUMENTS

D576,574	S	9/2008	Kobayakawa	
D596,592	S	7/2009	Yong et al.	
D602,451	S	10/2009	Gielen	
D615,504	S	5/2010	Keller et al.	
D623,152	S	9/2010	Hwang et al.	
D642,142	S	7/2011	Kuwaharada et al.	
D649,943	S	12/2011	Kuwaharada et al.	
D650,342	S	12/2011	Kuwaharada et al.	
D650,343	S	12/2011	Andrews et al.	
D660,257	S	5/2012	Andrews et al.	
D667,802	S	9/2012	Otaki et al.	
D673,126	S	12/2012	Donofrio et al.	
D673,127	S	12/2012	Cho et al.	
D674,758	S	1/2013	Wu et al.	
D675,169	S	1/2013	Chou	
D691,973	S	10/2013	Donofrio et al.	
D697,642	S	1/2014	Amari et al.	
D704,154	S	5/2014	Andrews et al.	
D711,841	S	8/2014	Britt et al.	
D712,849	S	9/2014	Britt et al.	
D713,804	S	9/2014	Britt et al.	
D718,258	S	11/2014	Lowes et al.	
9,006,763	B2 *	4/2015	Ueno	H01L 33/508 257/98
9,070,850	B2	6/2015	Keller et al.	
D738,832	S	9/2015	Hussell et al.	
D741,821	S	10/2015	Song	
D749,051	S	2/2016	Clark et al.	
9,349,929	B2	5/2016	Clark et al.	
D762,183	S	7/2016	Kim et al.	
D763,473	S	8/2016	Watson-Levack	
9,461,024	B2 *	10/2016	Hussell	H01L 25/0753
9,515,055	B2	12/2016	Britt et al.	
D777,122	S	1/2017	Bergmann et al.	
9,627,361	B2 *	4/2017	Andrews	H01L 25/0753
D790,486	S	6/2017	Reiherzer et al.	
9,887,327	B2	2/2018	Reiherzer et al.	
10,388,838	B2 *	8/2019	Hung	H01L 33/0075
10,439,112	B2	10/2019	Clark et al.	
10,516,081	B1	12/2019	Xin et al.	
10,522,722	B2 *	12/2019	Damborsky	H01L 33/60
10,854,780	B2 *	12/2020	Hung	H01L 33/508
D915,308	S	4/2021	Maruyama	
D926,714	S	8/2021	Wilcox et al.	
11,552,229	B2	1/2023	Damborsky et al.	
D996,377	S	8/2023	Celano et al.	
D996,378	S	8/2023	Trinkle et al.	
D1,000,400	S *	10/2023	Wilcox	D13/180
2007/0253209	A1	11/2007	Loh et al.	
2008/0054280	A1	3/2008	Reginelli et al.	
2010/0140633	A1	6/2010	Emerson	
2010/0140634	A1	6/2010	van de Ven et al.	
2010/0252851	A1	10/2010	Emerson et al.	
2011/0062482	A1	3/2011	Solomensky et al.	
2011/0220920	A1	9/2011	Collins et al.	
2012/0086024	A1	4/2012	Andrews et al.	
2012/0087108	A1	4/2012	Ke et al.	
2013/0092960	A1	4/2013	Wilcox et al.	
2013/0105835	A1	5/2013	Wu et al.	
2013/0256711	A1 *	10/2013	Joo	H01L 33/60 438/28
2013/0322068	A1	12/2013	Clark et al.	
2013/0322070	A1	12/2013	Clark et al.	
2013/0322088	A1	12/2013	Huang et al.	
2014/0021493	A1 *	1/2014	Andrews	H01L 33/60 257/E33.068
2014/0131748	A1	5/2014	Song	
2014/0291715	A1	10/2014	Reiherzer et al.	
2015/0179903	A1	6/2015	Pun et al.	
2017/0084587	A1	3/2017	Hung et al.	
2019/0198709	A1	6/2019	Wildeson et al.	
2019/0355886	A9	11/2019	Hussell et al.	
2022/0005987	A1	1/2022	Wilcox et al.	
2022/0165923	A1	5/2022	Kamp et al.	
2023/0140302	A1	5/2023	Miller et al.	
2023/0260972	A1	8/2023	Celano et al.	
2023/0261154	A1	8/2023	Trinkle et al.	

FOREIGN PATENT DOCUMENTS

TW	D140189	S	4/2011
TW	D141208	S	6/2011
TW	D149503	S	10/2012
TW	D157837	S	12/2013
TW	D170851	S	10/2015
TW	D188043	S	1/2018
WO	2010035206	A1	4/2010
WO	2018088671	A1	5/2018
WO	2021023532	A1	2/2021

OTHER PUBLICATIONS

Notice of Allowance for U.S. Appl. No. 29/829,994, mailed Mar. 15, 2023, 8 pages.

Notice of Allowance for U.S. Appl. No. 29/827,155, mailed Mar. 15, 2023, 9 pages.

International Search Report and Written Opinion for International Patent Application No. PCT/US2023/062635, mailed May 22, 2023, 13 pages.

International Search Report and Written Opinion for International Patent Application No. PCT/US2023/018595, mailed Jul. 31, 2023, 13 pages.

Examination Report for Taiwanese Patent Application No. 112303066, mailed Oct. 19, 2023, 9 pages.

Office Action for Chinese Patent Application No. 202230530277.0, mailed Jul. 21, 2023, 8 pages.

Preliminary Examination Report for Taiwanese Patent Application No. 112103007, mailed Sep. 20, 2023, 17 pages.

Notice of Allowance for Taiwanese Patent Application No. 111303915, mailed Sep. 1, 2023, 5 pages.

Notice of Allowance for Taiwanese Patent Application No. 112303066, mailed Feb. 19, 2024, 3 pages.

Notification to Grant for Chinese Patent Application No. 202230530277.0, mailed Feb. 22, 2024, 4 pages.

Office Action for Taiwanese Patent Application No. 112112910, mailed Feb. 22, 2024, 17 pages.

* cited by examiner

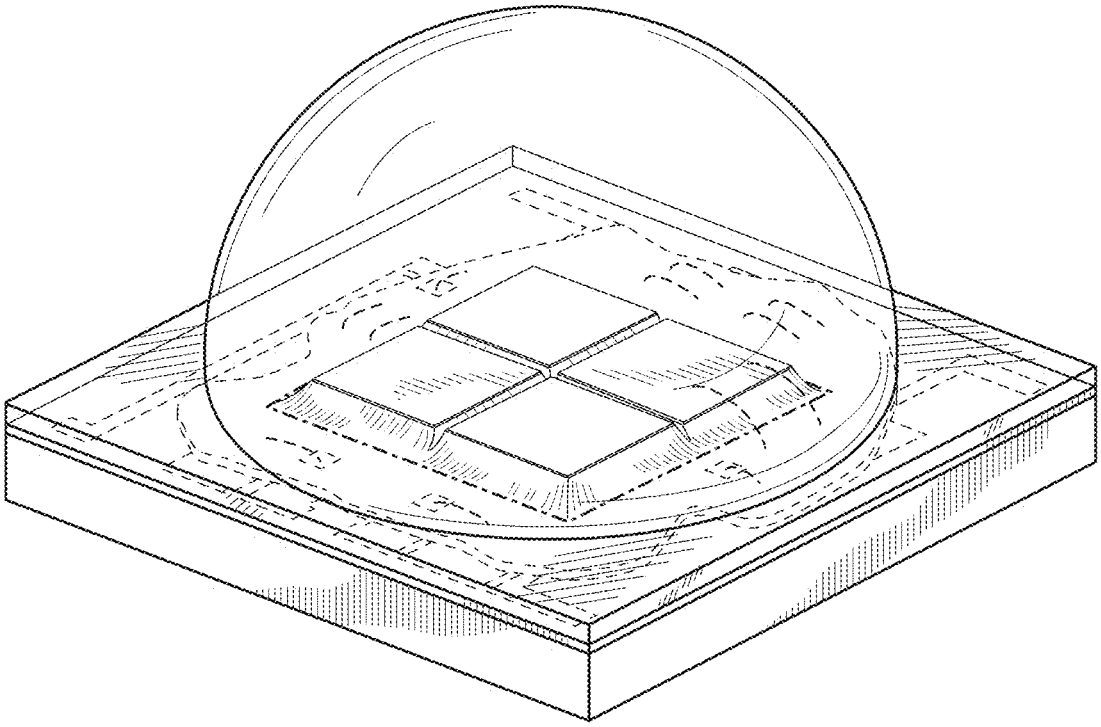

FIG. 1

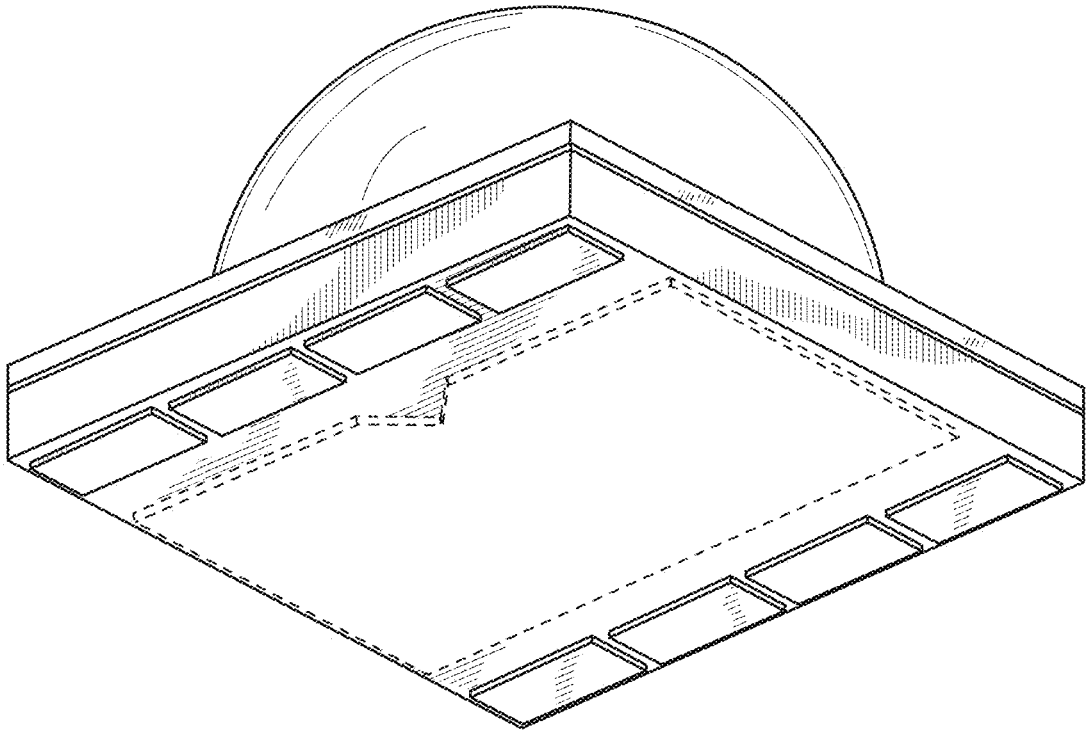

FIG. 2

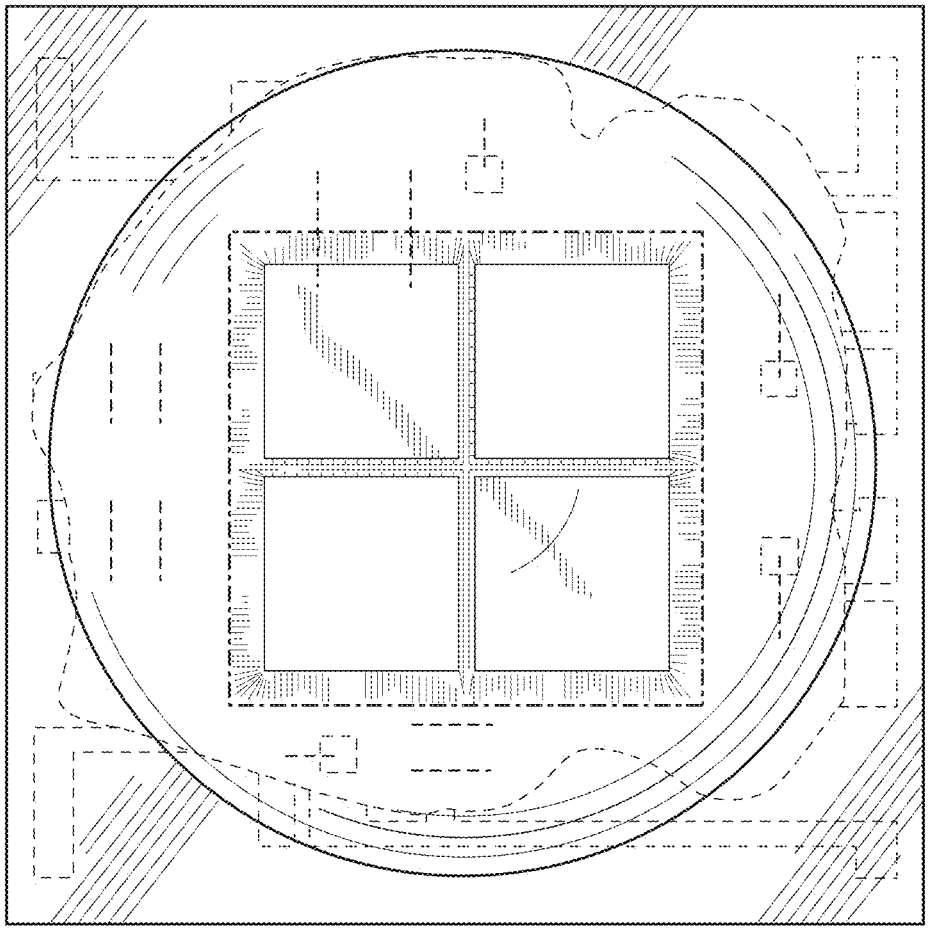

FIG. 3

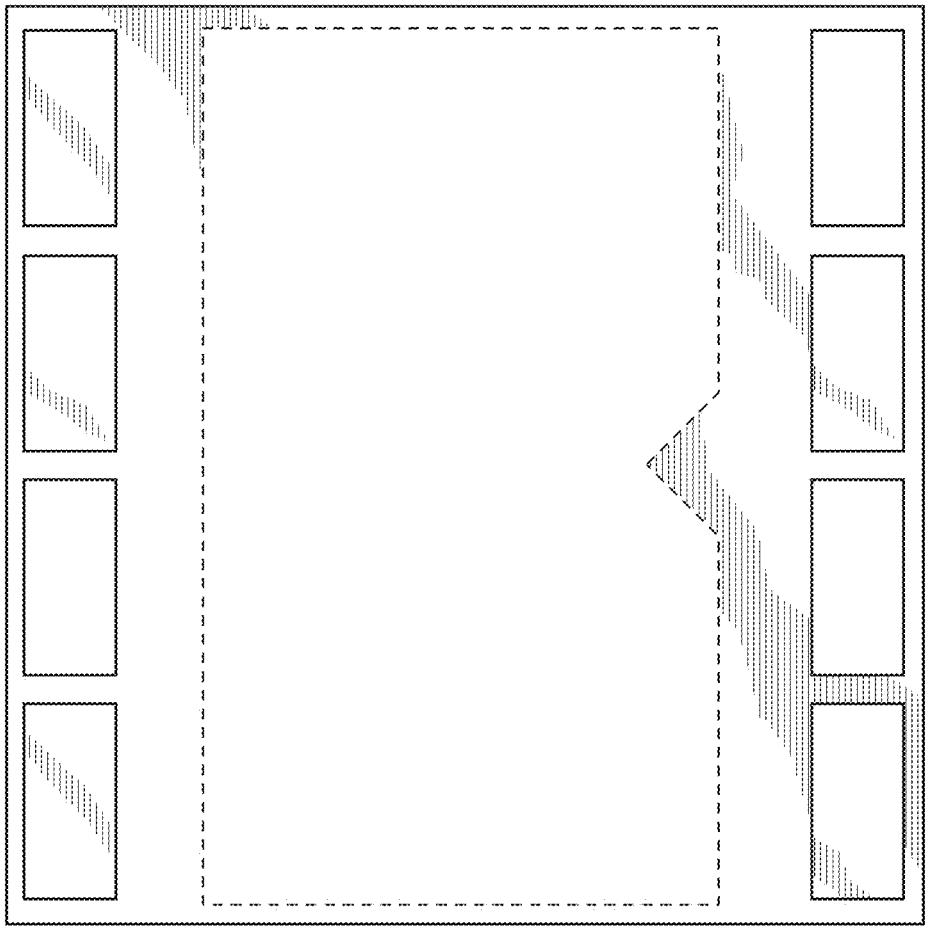

FIG. 4

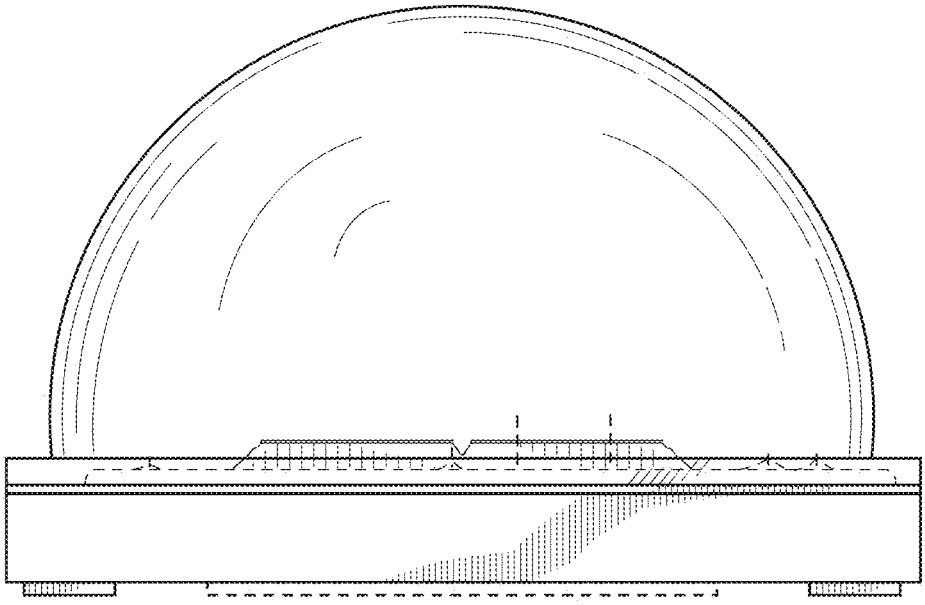

FIG. 5

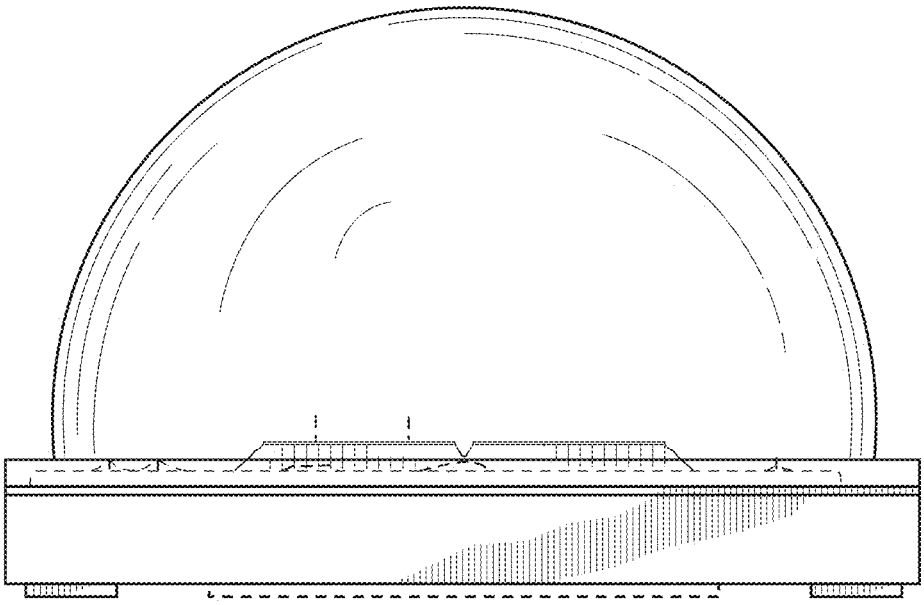

FIG. 6

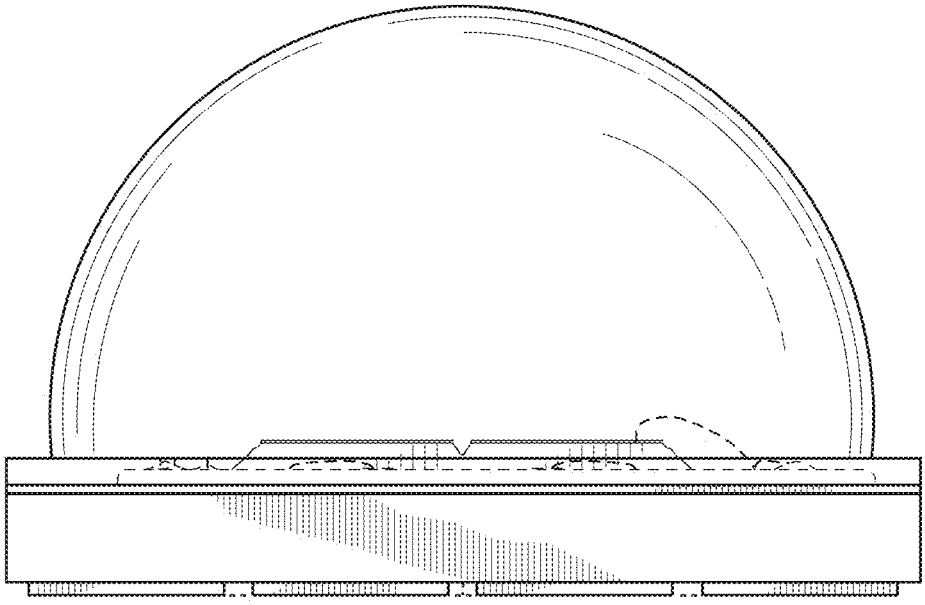

FIG. 7

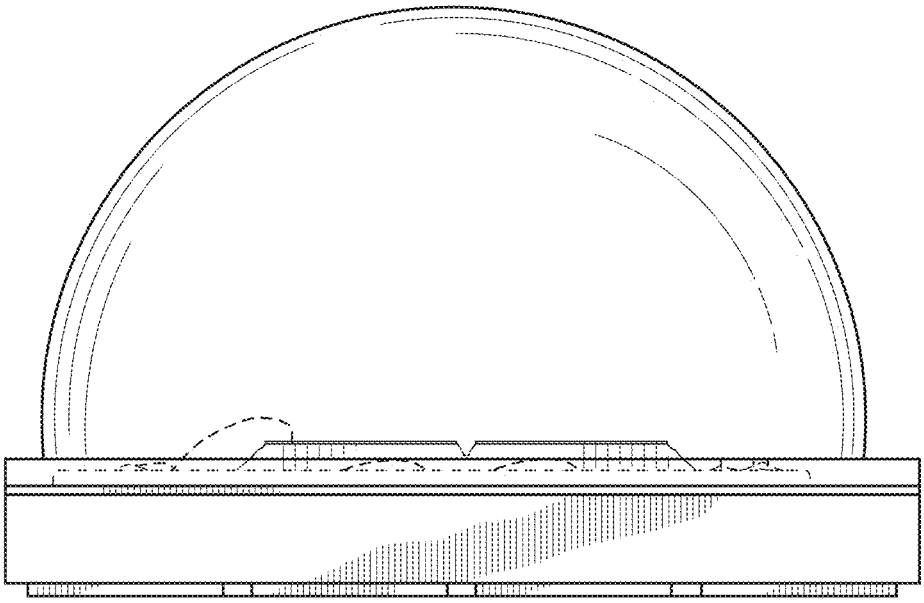

FIG. 8

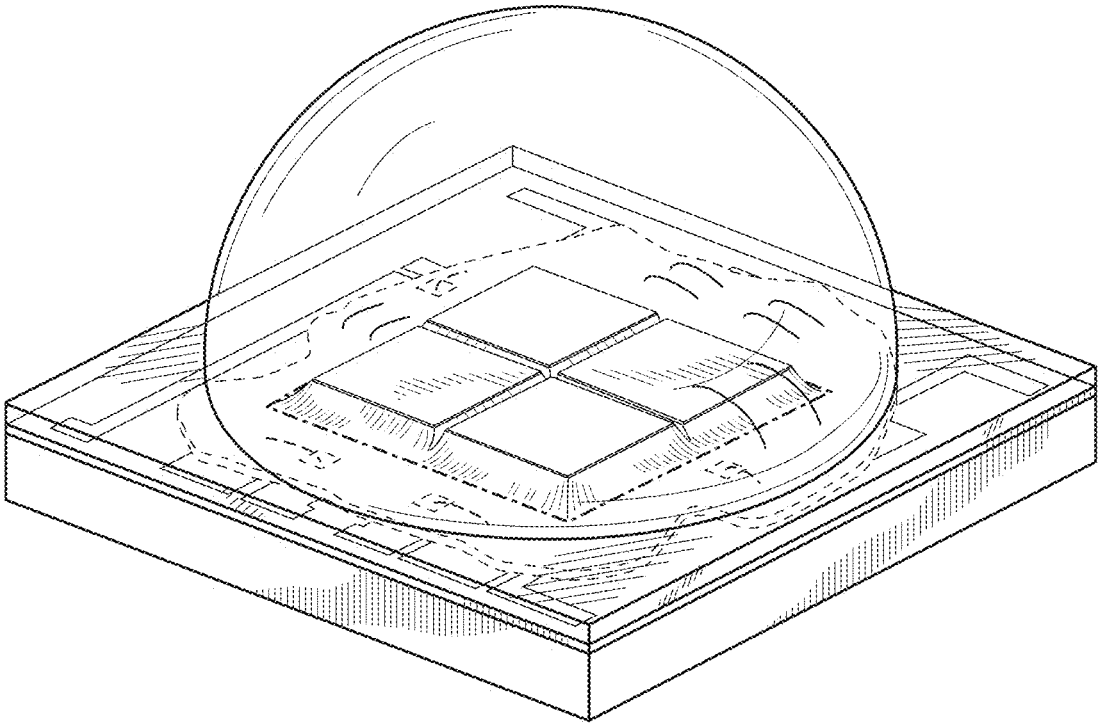

FIG. 9

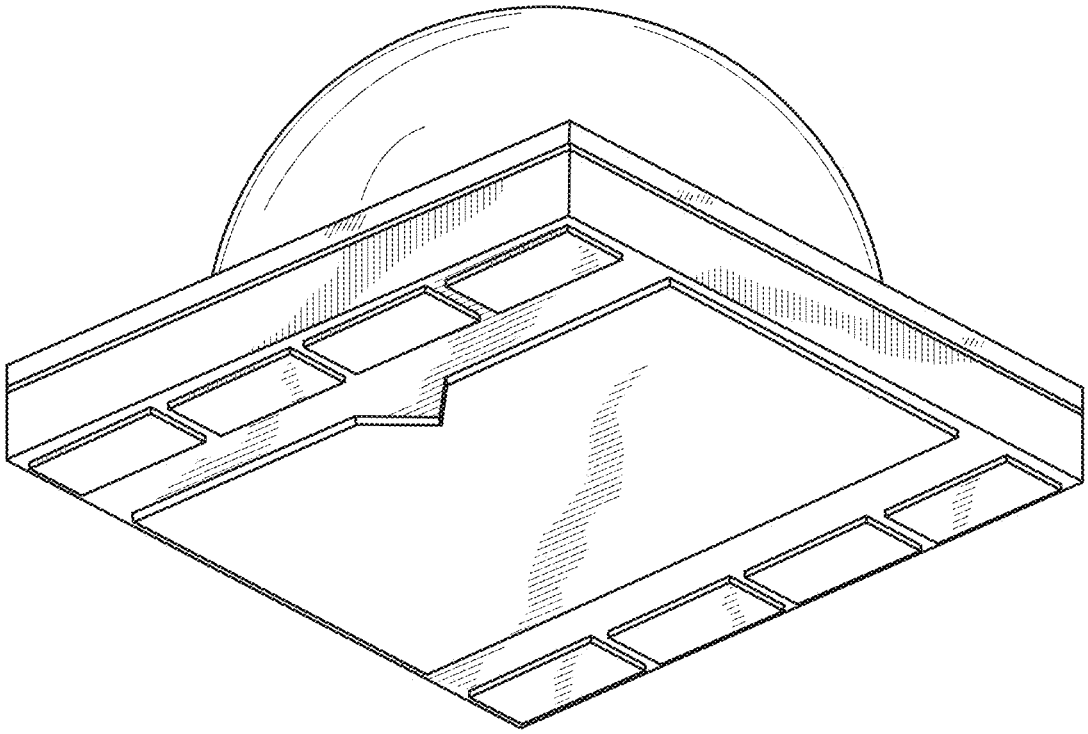

FIG. 10

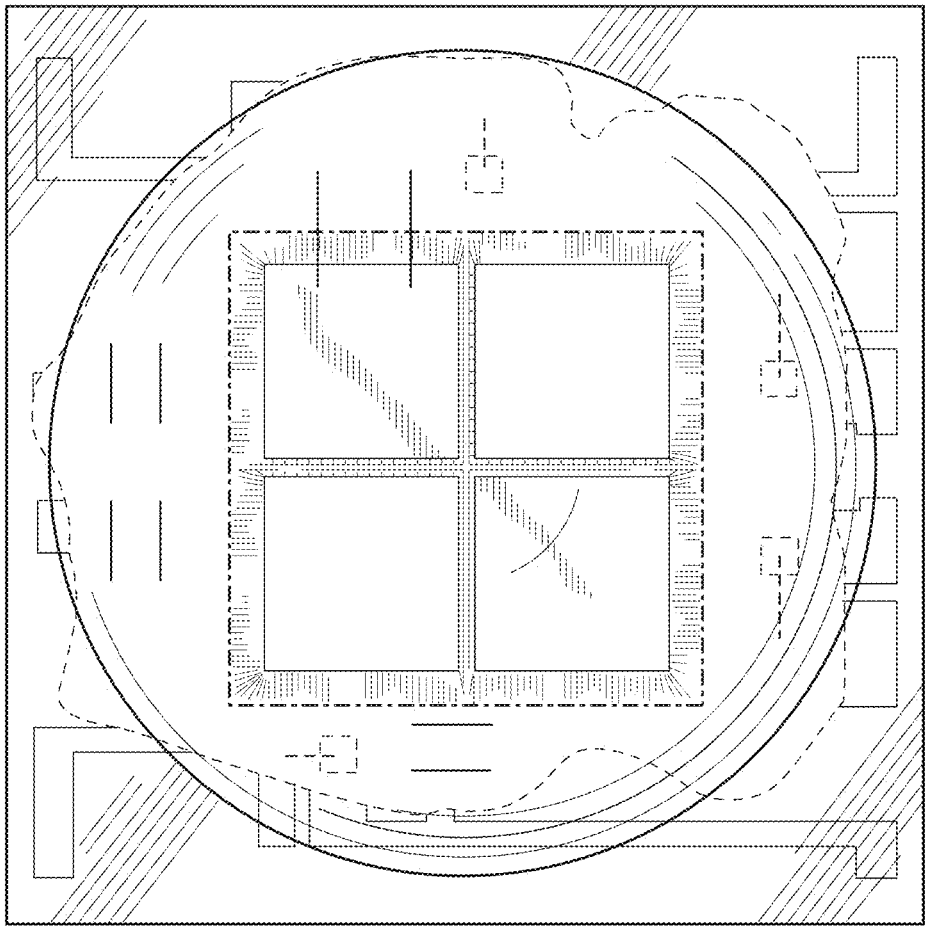

FIG. 11

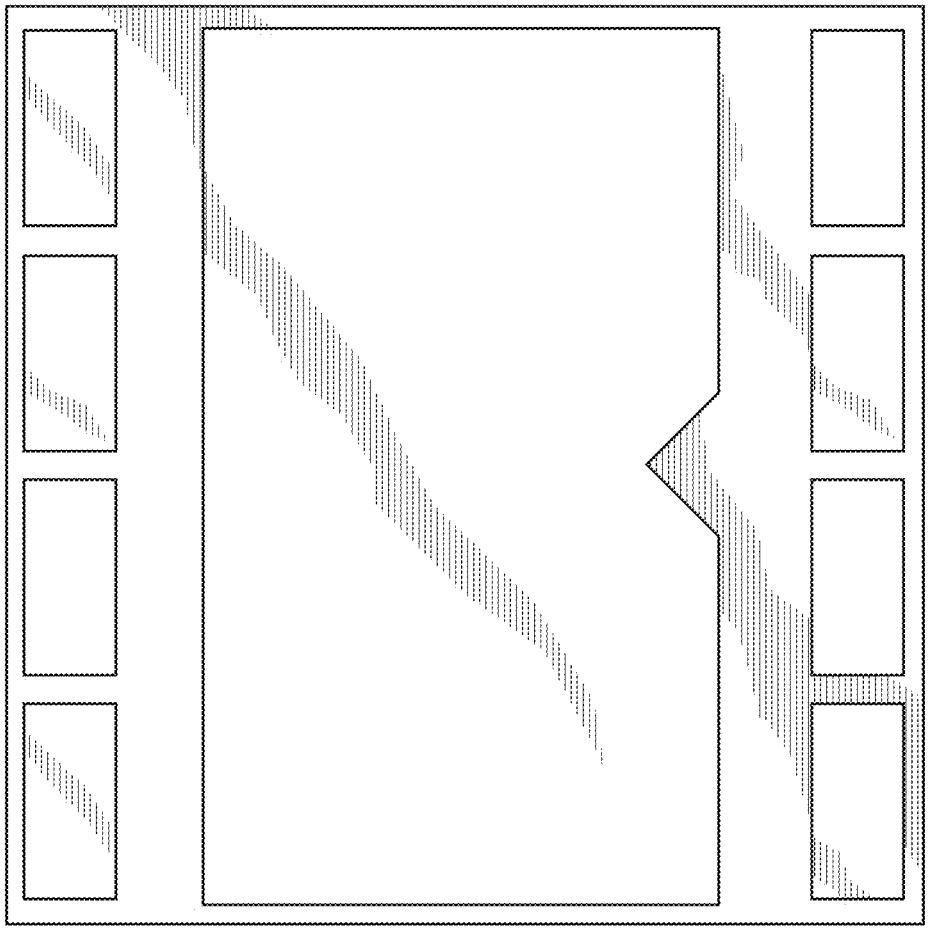

FIG. 12

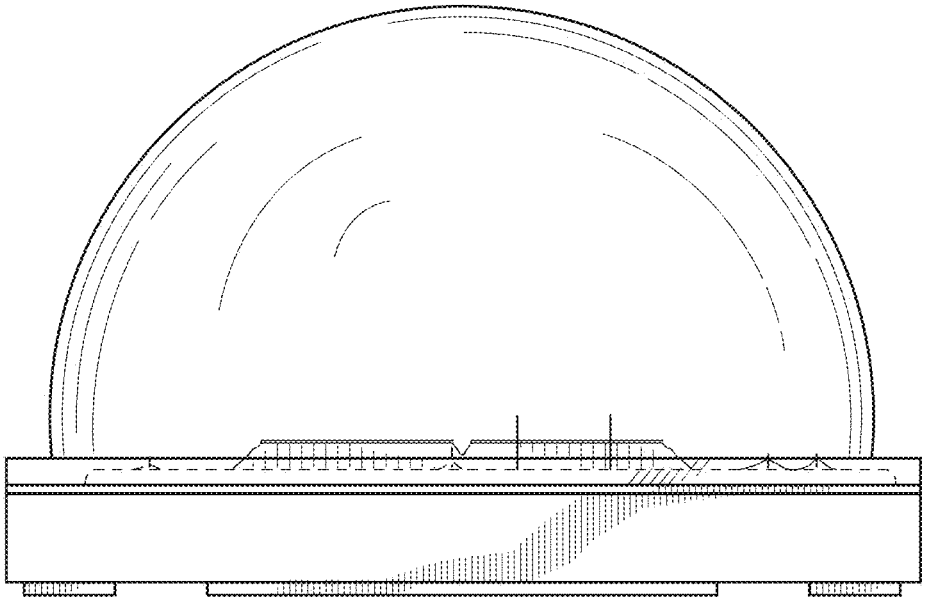

FIG. 13

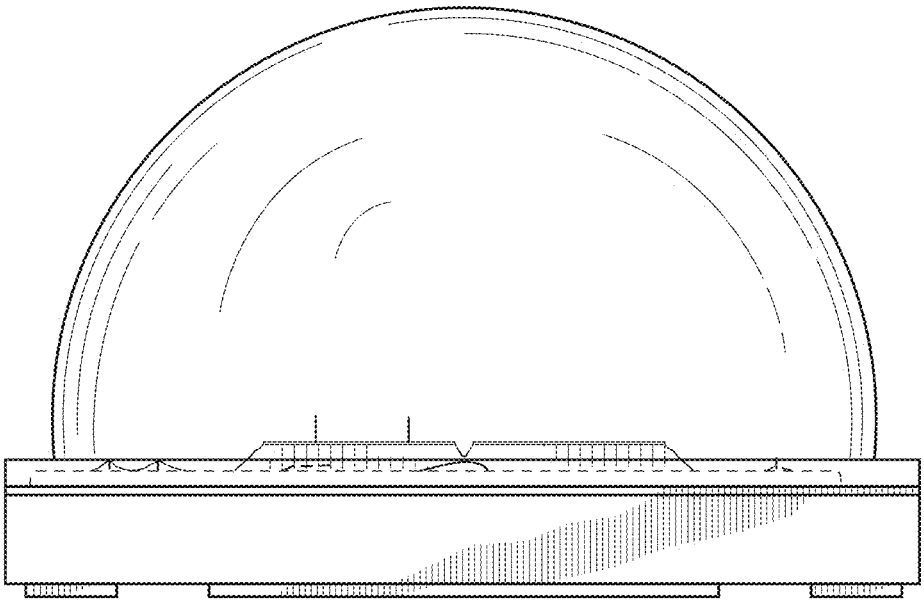

FIG. 14

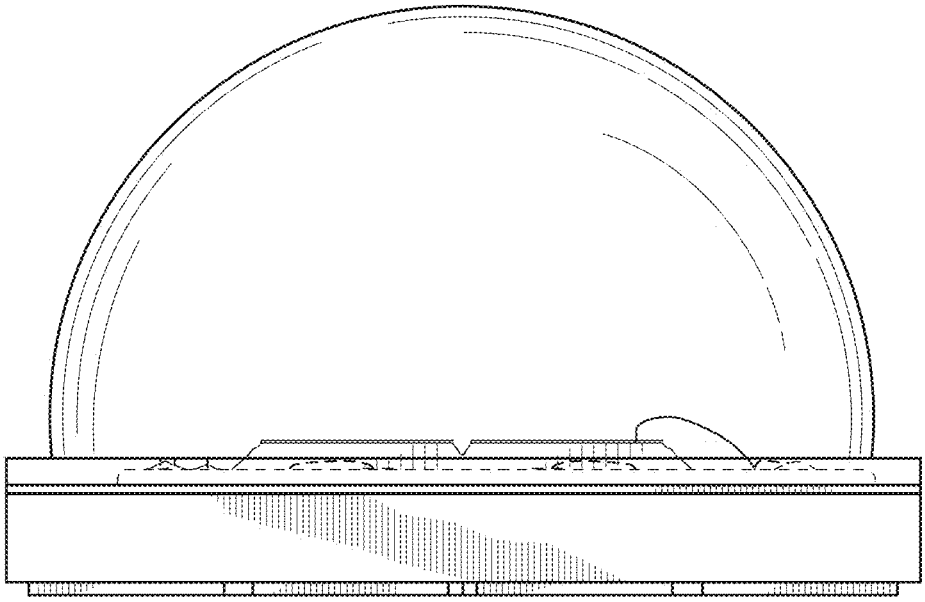

FIG. 15

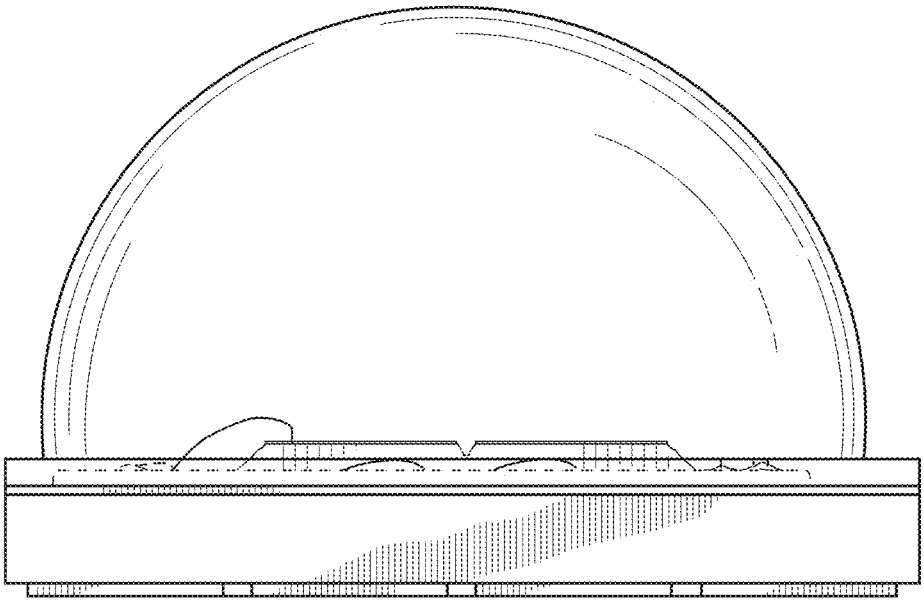

FIG. 16