(12) STANDARD PATENT (11) Application No. **AU 2019202365 B1**
(19) AUSTRALIAN PATENT OFFICE

(54) Title
A push-type can opener

(51) International Patent Classification(s)
B67B 7/48 (2006.01)

(21) Application No: **2019202365** (22) Date of Filing: **2019.04.04**

(30) Priority Data

(31) Number	(32) Date	(33) Country
2019102400590	**2019.03.27**	**CN**

(43) Publication Date: **2020.10.15**
(43) Publication Journal Date: **2020.10.15**
(44) Accepted Journal Date: **2020.10.15**

(71) Applicant(s)
Lanxi Zhengke Lockset Co., Ltd.

(72) Inventor(s)
Wang, Huimiao

(74) Agent / Attorney
Lanxi Zhengke Lockset Co., Ltd., PO Box 4333, Oatley, NSW, 2223, AU

(56) Related Art
US 4358970 A
CN 108083207 A
CN 206955606 U
JP 2007137456 A
US 6651531 B1
CN 204897355 U
WO 2002092493 A1
US 5481946 A

2019202365 04 Apr 2019

ABSTRACT

This invention discloses a push-type can opener, including a can opener base 25, wherein the can opener base 25 is provided with a holding mechanism 32, and an upper end surface of the can opener base 25 is provided with a supporting block 1, wherein an upper end of the supporting block 1 is provided with an extension block 39. When it starts to work, the apparatus automatically fixes the cans and completes the can opening. Compared with the common can openers, the opened lid edge of the apparatus turns inward, which preventing people from injuring themselves by lifting the lid, and also protecting themselves to a certain extent. Moreover, the apparatus improves the canning efficiency by mechanical transmission.

2019202365 23 Sep 2020

A PUSH-TYPE CAN OPENER

TECHNICAL FIELD

[0001] The present invention relates to the field of can openers, in particular to a push-type can opener.

BACKGROUND OF THE INVENTION

[0002] At present, when opening a can, people usually adopt the method of manually cutting the can by using tools directly. However, after people open the can in this way, the edge of the opened can is very rough, and it is dangerous and easy to hurt people when touching by hand. Moreover, it is so laborious that is not conducive to improving the efficiency of can opening.

BRIEF SUMMARY OF THE INVENTION

[0003] The technical problem to be solved by the invention is to provide a push-type can opener so as to overcome the problems existing in the prior art.

The following technical plan is adopted by the invention: a push-type can opener according to an embodiment of the invention comprises a can opener base, wherein said can opener base is provided with a holding mechanism, and an upper end surface of said can opener base is provided with a supporting block, wherein an upper end of said supporting block is provided with an extension block, wherein said supporting block is provided with a lifting cavity in which a first end wall located in said extension block, wherein a motor is arranged on an upper end wall of said lifting cavity, and a lifting shaft is in power connection with said motor, wherein a lower end of said lifting shaft is positioned in said lifting cavity, and a lower end wall of said lifting cavity is provided with a sliding chute that communicated with an outer space, and said lifting shaft is spirally connected with a lifting rod, wherein a compression spoon with a lower end positioned in an outer space is slidably arranged on a first end of said lifting rod, wherein said sliding chute is provided with an electromagnetic rod penetrated through by said compression spoon, and a second end of said lifting rod is provided with a lower compression bar, and a lower end of said supporting block is provided with a

2019202365 23 Sep 2020

transmission mechanism, wherein said transmission mechanism comprises a transmission cavity, wherein a lower end of said lifting shaft is positioned in said transmission cavity, wherein a lower end wall of said transmission cavity is provided with a rotating shaft, wherein upper and lower end walls of said transmission cavity are provided with movable cavities respectively, wherein a driven cavity is arranged in one end wall of said transmission cavity; said movable plates with second ends located in said driven cavity are slidably arranged in said movable cavities, wherein one of said movable plates at upper side is provided with a through hole 34 and one end of said movable plates located at an outer space, and a rotating shaft with one end positioned in said transmission cavity is rotatably connected with first ends of said movable plates, wherein said rotating shaft is provided with a primary belt pulley, wherein a lower end of said rotating shaft at an upper side is provided with a semi-gear, wherein an upper end of said rotating shaft at a lower side is provided with a push gear, and a secondary belt pulley which is connected to said primary belt pulley through a belt is arranged on a lower end of said lifting shaft and said rotating shaft respectively, and a lower end of said lifting shaft is provided with a ratchet mechanism, and said compression spoon repeatedly lifts and presses the can lid in coordination with said transmission mechanism and said holding mechanism, thereby opening the can.

[0004] Preferably, said holding mechanism comprises a rotating slot with an upward opening, wherein said rotating slot is provided with a holding block with an upper end positioned in an outer space, wherein an outer side wall of said rotating slot is provided with a ring slot, wherein said ring slot is provided with a sliding block, wherein a connecting rod is provided between said sliding block and said holding block, wherein a reset spring is arranged between an end wall of said ring slot and said sliding block, and a storage tank is arranged in said holding block, wherein two end walls of said storage tank are provided with a spring slot, wherein said spring slot is provided with a trapezoidal block with one end positioned in said storage tank, wherein a retractable spring is arranged between said trapezoidal block and one end wall of said spring slot, and an upper end of said trapezoidal block at one side is provided with a connecting pillar with an upper end positioned in said sliding chute; thereby the can is clamped in the cooperation of said trapezoidal block and said retractable spring.

[0005] Preferably, said transmission mechanism comprises a driven shaft, and upper and lower end surfaces of said movable plates at an upper side are provided with a push block, and second ends of said movable plates at a lower side is provided with a driven plate, and

2019202365 23 Sep 2020

said driven shaft is provided with a driven gear, wherein said push block at a lower side and said driven plate are in engagement connection with said driven gear; a first end wall of said driven cavity is provided with a spring cavity, wherein an upper end wall of said spring cavity is provided with an elevating slot, wherein one side of said elevating slot is provided with an elevating cavity with an upward opening, and said spring cavity is provided with an ejection rod with one end positioned in said driven cavity, wherein a compression spring is arranged between said ejection rod and a first end wall of said spring cavity, and said ejection rod is provided with a limit trench, wherein said elevating slot is provided with a limit block with a lower end positioned in said limit trench, and said elevating cavity is provided with an elevating block, wherein a lower end of said elevating block is provided with an elevating spring, wherein an upper end of said elevating block is connected to an upper end of said limit block through a rope, and said semi-gear and the push gear are engaged with said holding block respectively.

[0006] Preferably, said ratchet mechanism comprises a ratchet, and an upper end of said rotating shaft is provided with a ratchet block, wherein said ratchet block is provided with a ratchet slot, wherein two end walls of said ratchet slot is provided with an ejection cavity, wherein one end wall of said ejection cavity is provided with an ejection spring, wherein one end of said ejection spring is provided with a stop block with one end positioned in said ratchet slot, which is rotated in a one-way manner for power transmission.

[0007] To sum up, the invention has the following benefits: the apparatus is characterized by simple structure and convenient operation, so that the apparatus automatically fixes the cans and completes the can opening; compared with the common can openers, the opened lid edge of the apparatus turns inward, preventing people from injuring themselves by lifting the lid, and protecting themselves to a certain extent; also, the apparatus improves the canning efficiency by mechanical transmission.

BRIEF DESCRIPTION OF THE DRAWINGS

[0008] For better explain the technical proposal in the present invention embodiments or the prior art, the drawings to be used in the description of the embodiments or the prior art will be briefly described below. Obviously, the drawings in the following description are only some embodiments of the present invention. For those common technicians in this field, other

2019202365 23 Sep 2020

drawings may also be obtained based on these drawings without any creative work. The invention will be described in detail below referring to FIG.1 to FIG.4. For better explanation, the orientations described hereinafter are defined as follows: directions of up, down, front and rear in the text are identical to the directions of up, down, front and rear of FIG.1.

[0009] FIG. 1 is the front view of the whole-section of overall schematic structural diagram of a push-type can opener in this invention;

[0010] FIG. 2 is the top view of the partially-section of enlarged schematic structural diagram of the holding mechanism of a push-type can opener in this invention;

[0011] FIG. 3 is the front view of the partially-section of enlarged schematic structural diagram of the transmission mechanism of a push-type can opener in this invention;

[0012] FIG. 4 is the front view of the partially-section of enlarged schematic structural diagram of the ratchet mechanism of a push-type can opener in this invention.

DETAILED DESCRIPTION OF THE INVENTION

[0013] All of the features described herein, or all of the steps of any method or process so described, may be combined in any ways, except some of such features and / or steps are mutually exclusive.

[0014] Referring to Figs.1-4, a push-type can opener according to an embodiment of the invention comprises a can opener base 25, wherein said can opener base 25 is provided with a holding mechanism 32, and an upper end surface of said can opener base 25 is provided with a supporting block 1, wherein an upper end of said supporting block 1 is provided with an extension block 39, wherein said supporting block 1 is provided with a lifting cavity 5 in which a first end wall located in said extension block 39, wherein a motor 55 is arranged on an upper end wall of said lifting cavity 5, and a lifting shaft 2 is in power connection with said motor 55, wherein a lower end of said lifting shaft 2 is positioned in said lifting cavity 5, and a lower end wall of said lifting cavity 5 is provided with a sliding chute 38 that communicated with an outer space, and said lifting shaft 2 is spirally connected with a lifting rod 3, wherein a compression spoon 36 with a lower end positioned in an outer space is slidably arranged on

2019202365 23 Sep 2020

a first end of said lifting rod 3, wherein said sliding chute 38 is provided with an electromagnetic rod 35 penetrated through by said compression spoon 36, and a second end of said lifting rod 3 is provided with a lower compression bar 4, and a lower end of said supporting block 1 is provided with a transmission mechanism 7, wherein said transmission mechanism 7 comprises a transmission cavity 14, wherein a lower end of said lifting shaft 2 is positioned in said transmission cavity 14, wherein a lower end wall of said transmission cavity 14 is provided with a rotating shaft 16, wherein upper and lower end walls of said transmission cavity 14 are provided with movable cavities 15 respectively, wherein a driven cavity 8 is arranged in one end wall of said transmission cavity 14; said movable plates 13 with second ends located in said driven cavity 8 are slidably arranged in said movable cavities 15, wherein one of said movable plates 13 at upper side is provided with a through hole 34 and one end of said movable plates 13 located at an outer space, and a rotating shaft 20 with one end positioned in said transmission cavity 14 is rotatably connected with first ends of said movable plates 13, wherein said rotating shaft 20 is provided with a primary belt pulley 19, wherein a lower end of said rotating shaft 20 at an upper side is provided with a semi-gear 23, wherein an upper end of said rotating shaft 20 at a lower side is provided with a push gear 18, and a secondary belt pulley 17 which is connected to said primary belt pulley 19 through a belt 33 is arranged on a lower end of said lifting shaft 2 and said rotating shaft 16 respectively, and a lower end of said lifting shaft 2 is provided with a ratchet mechanism 56, and said compression spoon 36 repeatedly lifts and presses the can lid in coordination with said transmission mechanism 7 and said holding mechanism 32, thereby opening the can.

[0015] Beneficially, said holding mechanism 32 comprises a rotating slot 22 with an upward opening, wherein said rotating slot 22 is provided with a holding block 29 with an upper end positioned in an outer space, wherein an outer side wall of said rotating slot 22 is provided with a ring slot 21, wherein said ring slot 21 is provided with a sliding block 24, wherein a connecting rod 26 is provided between said sliding block 24 and said holding block 29, wherein a reset spring 40 is arranged between an end wall of said ring slot 21 and said sliding block 24, and a storage tank 31 is arranged in said holding block 29, wherein two end walls of said storage tank 31 are provided with a spring slot 27, wherein said spring slot 27 is provided with a trapezoidal block 30 with one end positioned in said storage tank 31, wherein a retractable spring 28 is arranged between said trapezoidal block 30 and one end wall of said spring slot 27, and an upper end of said trapezoidal block 30 at one side is provided with a

2019202365 23 Sep 2020

connecting pillar 37 with an upper end positioned in said sliding chute 38; thereby the can is clamped in the cooperation of said trapezoidal block 30 and said retractable spring 28.

[0016] Beneficially, said transmission mechanism 7 comprises a driven shaft 10, and upper and lower end surfaces of said movable plates 13 at an upper side are provided with a push block 51, and second ends of said movable plates 13 at a lower side is provided with a driven plate 12, and said driven shaft 10 is provided with a driven gear 11, wherein said push block 51 at a lower side and said driven plate 12 are in engagement connection with said driven gear 11; a first end wall of said driven cavity 8 is provided with a spring cavity 42, wherein an upper end wall of said spring cavity 42 is provided with an elevating slot 48, wherein one side of said elevating slot 48 is provided with an elevating cavity 6 with an upward opening, and said spring cavity 42 is provided with an ejection rod 41 with one end positioned in said driven cavity 8, wherein a compression spring 43 is arranged between said ejection rod 41 and a first end wall of said spring cavity 42, and said ejection rod 41 is provided with a limit trench 50, wherein said elevating slot 48 is provided with a limit block 49 with a lower end positioned in said limit trench 50, and said elevating cavity 6 is provided with an elevating block 45, wherein a lower end of said elevating block 45 is provided with an elevating spring 44, wherein an upper end of said elevating block 45 is connected to an upper end of said limit block 49 through a rope 46, and said semi-gear 23 and the push gear 18 are engaged with said holding block 29 respectively.

[0017] Beneficially, said ratchet mechanism 56 comprises a ratchet 9, and an upper end of said rotating shaft 16 is provided with a ratchet block 58, wherein said ratchet block 58 is provided with a ratchet slot 57, wherein two end walls of said ratchet slot 57 is provided with an ejection cavity 54, wherein one end wall of said ejection cavity 54 is provided with an ejection spring 53, wherein one end of said ejection spring 53 is provided with a stop block 52 with one end positioned in said ratchet slot 57, which is rotated in a one-way manner for power transmission.

[0018] Next, the applicant will refer to attached Figs. 1-4 and the specific composition of push-type can opener as described above, and describe the usage of push-type can opener of the present application in detail:

[0019] A second end of one of the movable plates 13 at an upper side is pushed to connect the

2019202365 23 Sep 2020

semi-gear 23 with the holding block 29; the movement of the push block 51 at a lower side drives one of the movable plates 13 at a lower side to move through the transmission of the driven gear 11; the push gear 18 is disengaged with the holding block 29; meanwhile, the reset spring 40 resets the holding block 29, and the electromagnetic rod 35 attracts the connecting rod 37; after the push block 51 on an upper side moves, the limit block 49 enters the limit trench 50, the compression spring 43 is compressed, and the rope 46 is tightened; the belt 33 at a lower side is loosened, while the belt 33 at an upper side is tightened; whereby the can is placed in the storage tank 31 and fixed by the trapezoidal block 30; the movement of the trapezoidal block 30 drives the compression spoon 36 to move through the connecting pillar 37 and the electromagnetic rod 35.

[0020] The operation of the motor 55 drives the lifting shaft 2 to rotate, causing the lifting rod 3, the lower compression bar 4 and the compression spoon 36 to descend; at the same time, the lifting shaft 2 drives the upper rotating shaft 2 at an upper side, the semi-gear 23, the primary belt pulley 19 at an upper side and the secondary belt pulley 17 to rotate, causes the holding block 29, the connecting rod 26 and the sliding block 24 to rotate, and the reset spring 40 is stretched; when the semi-gear 23 is disengaged from the holding block 29, the reset spring 40 resets the extension block 39; in the back and forth movement of the holding block 29, the compression spoon 36 is lowered to penetrate through the can, while the lower compression bar 4 causes the elevating block 45 to descend; the limit block 49 is lifted by the rope 46, and the compression spring 43 is reset; two of the movable plates 13 are reset through the ejection rod 41 and the push block 51; the push gear 18 is engaged with the holding block 29.

[0021] The motor 55 is rotated forward and backward to drive the compression spoon 36 to move up and down; when the compression spoon 36 is lowered, the rotating shaft 16 is not rotated through the ratchet mechanism 56; when the compression spoon 36 is lifted, the ratchet mechanism 56 transmits the rotation of the lifting shaft 2 to the rotating shaft 16; the push gear 18 is driven to rotate through transmission; the holding block 29 is rotated to a certain distance, and a lower end of the compression spoon 36 faces the upper surface that is not penetrated; the elastic force of the reset spring 40 is less than the resistance when the holding block 29 is reset, so that the holding block 29 cannot be reset; after repeated motions of compression spoon 36, the canning operation can be completed.

2019202365 23 Sep 2020

[0022] The invention has the following benefits: the apparatus is characterized by simple structure and convenient operation, so that the apparatus automatically fixes the cans and completes the can opening; compared with the common can openers, the opened lid edge of the apparatus turns inward, preventing people from injuring themselves by lifting the lid, and protecting themselves to a certain extent; also, the apparatus improves the canning efficiency by mechanical transmission.

[0023] The above is only the specific embodiment of the present invention, but the protection scope of the present invention is not limited thereto, and any changes or substitutions without creative efforts shall fall within the protection scope of the present invention. Therefore, the claimed protection extent of the invention shall be determined with reference to the appended claims.

2019202365 23 Sep 2020

CLAIMS

1. A push-type can opener, comprising:

a can opener base,

wherein said can opener base is provided with a holding mechanism;

a supporting block arranged in an upper end surface of said can opener base,

wherein an upper end of said supporting block is provided with an extension block,

wherein said supporting block is provided with a lifting cavity in which a first end wall located in said extension block,

wherein a motor is arranged on an upper end wall of said lifting cavity;

a lifting shaft in power connection with said motor,

wherein a lower end of said lifting shaft is positioned in said lifting cavity;

a sliding chute that communicated with an outer space arranged on a lower end wall of said lifting cavity;

a lifting rod spirally connected with said lifting shaft,

wherein a compression spoon with a lower end positioned in an outer space is slidably arranged on a first end of said lifting rod,

wherein said sliding chute is provided with an electromagnetic rod penetrated through by said compression spoon;

a lower compression bar arranged in a second end of said lifting rod;

2019202365 23 Sep 2020

a transmission mechanism arranged in a lower end of said supporting block,

wherein said transmission mechanism comprises a transmission cavity,

wherein a lower end of said lifting shaft is positioned in said transmission cavity,

wherein a lower end wall of said transmission cavity is provided with a rotating shaft,

wherein upper and lower end walls of said transmission cavity are provided with movable cavities respectively,

wherein a driven cavity is arranged in one end wall of said transmission cavity;

said movable plates with second ends located in said driven cavity are slidably arranged in said movable cavities,

wherein one of said movable plates at upper side is provided with a through hole and one end of said movable plates located at an outer space;

a rotating shaft with one end positioned in said transmission cavity rotatably connected with first ends of said movable plates,

wherein said rotating shaft is provided with a primary belt pulley,

wherein a lower end of said rotating shaft at an upper side is provided with a semi-gear,

wherein an upper end of said rotating shaft at a lower side is provided with a push gear;

a secondary belt pulley which is connected to said primary belt pulley through a belt arranged on a lower end of said lifting shaft and said rotating shaft respectively;

a ratchet mechanism arranged in a lower end of said lifting shaft;

2019202365 23 Sep 2020

whereby said compression spoon repeatedly lifts and presses the can lid in coordination with said transmission mechanism and said holding mechanism, thereby opening the can;

wherein said holding mechanism comprises a rotating slot with an upward opening,

wherein said rotating slot is provided with a holding block with an upper end positioned in an outer space,

wherein an outer side wall of said rotating slot is provided with a ring slot,

wherein said ring slot is provided with a sliding block,

wherein a connecting rod is provided between said sliding block and said holding block,

wherein a reset spring is arranged between an end wall of said ring slot and said sliding block;

a storage tank arranged in said holding block,

wherein two end walls of said storage tank are provided with a spring slot,

wherein said spring slot is provided with a trapezoidal block with one end positioned in said storage tank,

wherein a retractable spring is arranged between said trapezoidal block and one end wall of said spring slot;

a connecting pillar with an upper end positioned in said sliding chute arranged in an upper end of said trapezoidal block at one side;

whereby the can is clamped in the cooperation of said trapezoidal block and said retractable spring;

wherein said transmission mechanism comprises a driven shaft;

a push block arranged in upper and lower end surfaces of said movable plates at an upper side;

2019202365 23 Sep 2020

a driven plate arranged in second ends of said movable plates at a lower side;

a driven gear arranged in said driven shaft,

wherein said push block at a lower side and said driven plate are in engagement connection with said driven gear;

a spring cavity arranged in a first end wall of said driven cavity,

wherein an upper end wall of said spring cavity is provided with an elevating slot,

wherein one side of said elevating slot is provided with an elevating cavity with an upward opening;

an ejection rod with one end positioned in said driven cavity arranged in said spring cavity,

wherein a compression spring is arranged between said ejection rod and a first end wall of said spring cavity;

a limit trench arranged on said ejection rod,

wherein said elevating slot is provided with a limit block with a lower end positioned in said limit trench;

an elevating block arranged in said elevating cavity,

wherein a lower end of said elevating block is provided with an elevating spring,

wherein an upper end of said elevating block is connected to an upper end of said limit block through a rope, and said semi-gear and the push gear are engaged with said holding block respectively; wherein said ratchet mechanism comprises a ratchet;

a ratchet block arranged in an upper end of said rotating shaft,

wherein said ratchet block is provided with a ratchet slot,

2019202365 23 Sep 2020

wherein two end walls of said ratchet slot is provided with an ejection cavity,

wherein one end wall of said ejection cavity is provided with an ejection spring,

wherein one end of said ejection spring is provided with a stop block with one end positioned in said ratchet slot, which is rotated in a one-way manner for power transmission;

a second end of one of the movable plates at an upper side is pushed to connect the semi-gear with the holding block; the movement of the push block at a lower side drives one of the movable plates at a lower side to move through the transmission of the driven gear; the push gear is disengaged with the holding block; meanwhile, the reset spring resets the holding block, and the electromagnetic rod attracts the connecting rod; after the push block on an upper side moves, the limit block enters the limit trench, the compression spring is compressed, and the rope is tightened; the belt at a lower side is loosened, while the belt at an upper side is tightened; whereby the can is placed in the storage tank and fixed by the trapezoidal block; the movement of the trapezoidal block drives the compression spoon to move through the connecting pillar and the electromagnetic rod; the operation of the motor drives the lifting shaft to rotate, causing the lifting rod, the lower compression bar and the compression spoon to descend; at the same time,the lifting shaft drives the upper rotating shaft at an upper side, the semi-gear, the primary belt pulley at an upper side and the secondary belt pulley to rotate, causes the holding block, the connecting rod and the sliding block to rotate, and the reset spring is stretched; when the semi-gear is disengaged from the holding block, the reset spring resets the extension block; in the back and forth movement of the holding block, the compression spoon is lowered to penetrate through the can, while the lower compression bar causes the elevating block to descend; the limit block is lifted by the rope, and the compression spring is reset; two of the movable plates are reset through the ejection rod and the push block; the push gear is engaged with the holding block; the motor is rotated forward and backward to drive the compression spoon to move up and down; when the compression spoon is lowered, the rotating shaft is not rotated through the ratchet mechanism; when the compression spoon is lifted, the ratchet mechanism transmits the rotation of the lifting shaft to the rotating shaft; the push gear is driven to rotate through transmission; the holding block is rotated to a certain distance, and a lower end of the compression spoon faces the upper surface that is not penetrated; the elastic force of the reset spring is less than the resistance when the holding block is reset, so that the holding block

2019202365 23 Sep 2020

cannot be reset; after repeated motions of compression spoon, the canning operation can be completed.

2019202365 23 Sep 2020

DRAWINGS

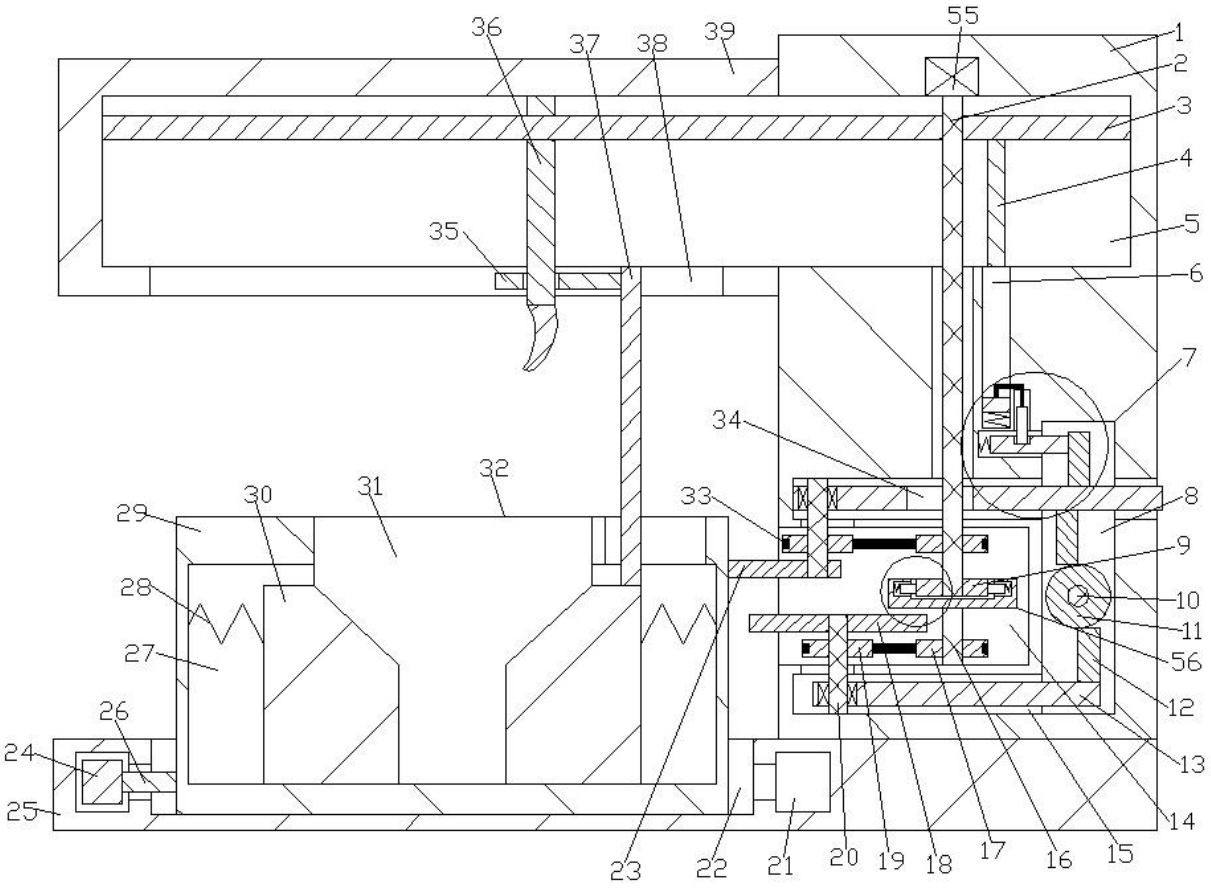

Figure 1

2019202365 23 Sep 2020

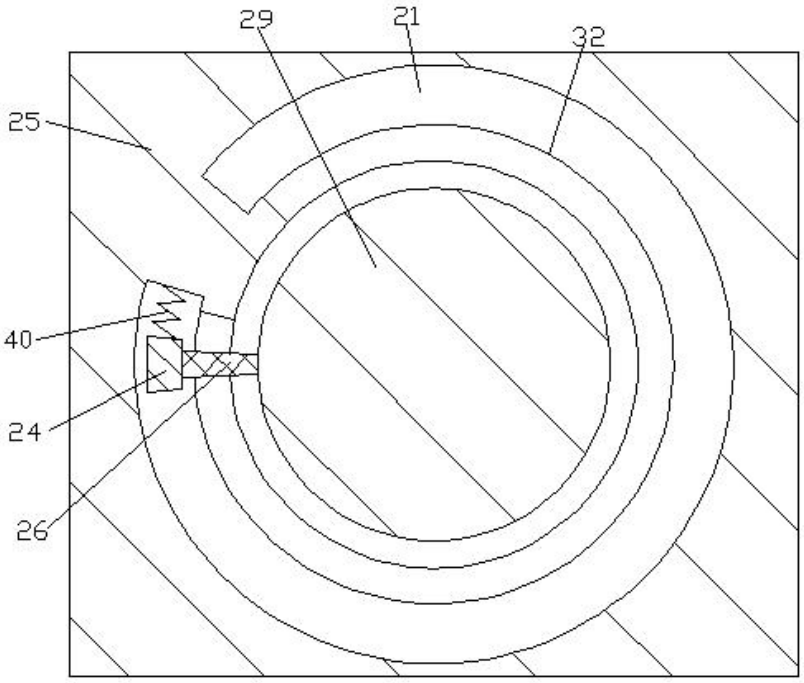

Figure 2

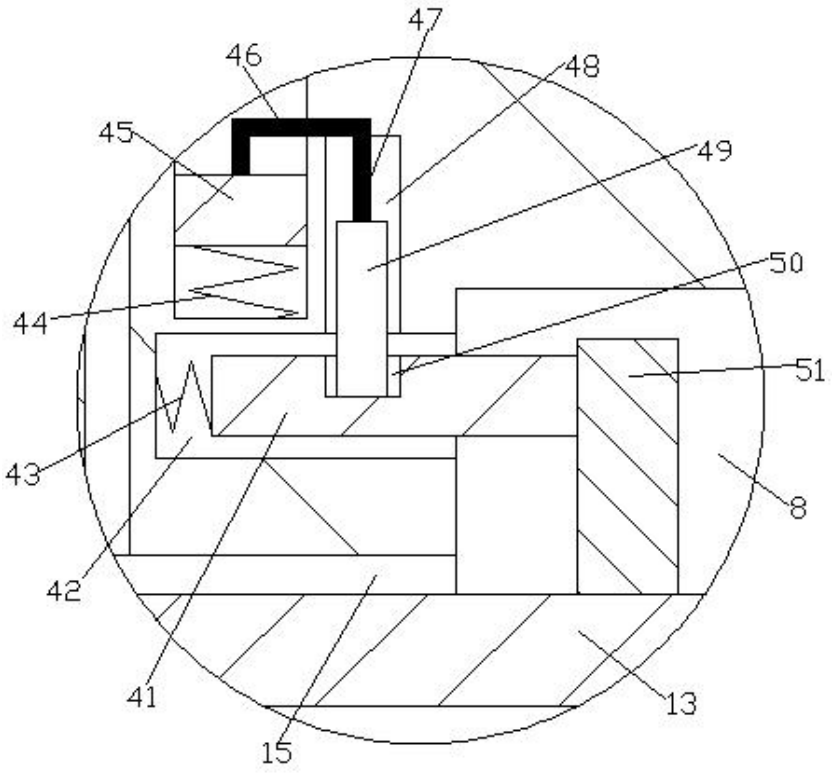

Figure 3

2019202365 23 Sep 2020

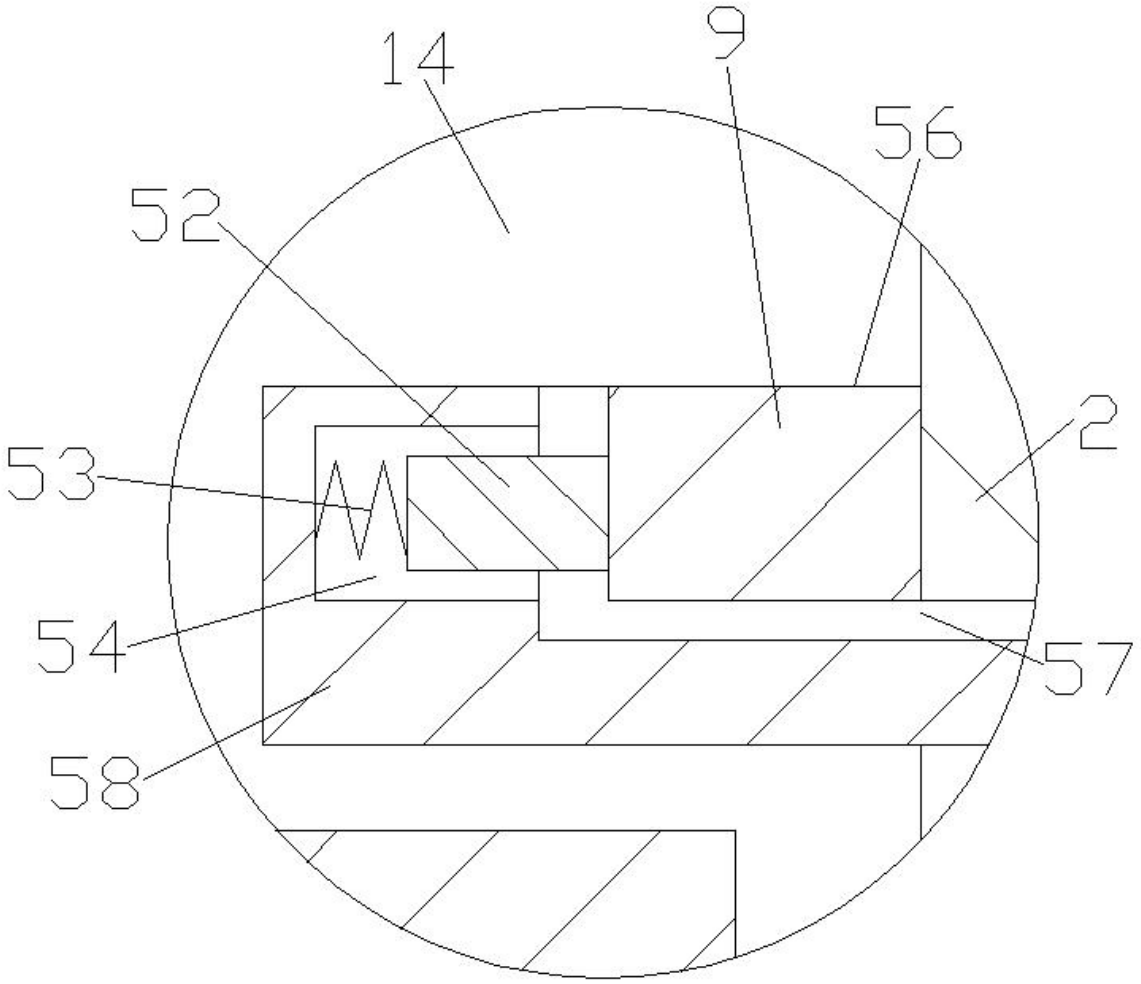

Figure 4