E. SIMON.

MACHINE FOR FORMING INCANDESCENT LAMP MOUNTS.

APPLICATION FILED DEC. 14, 1904.

955,442. **Patented Apr. 19, 1910.**

4 SHEETS—SHEET 1.

Fig. 1

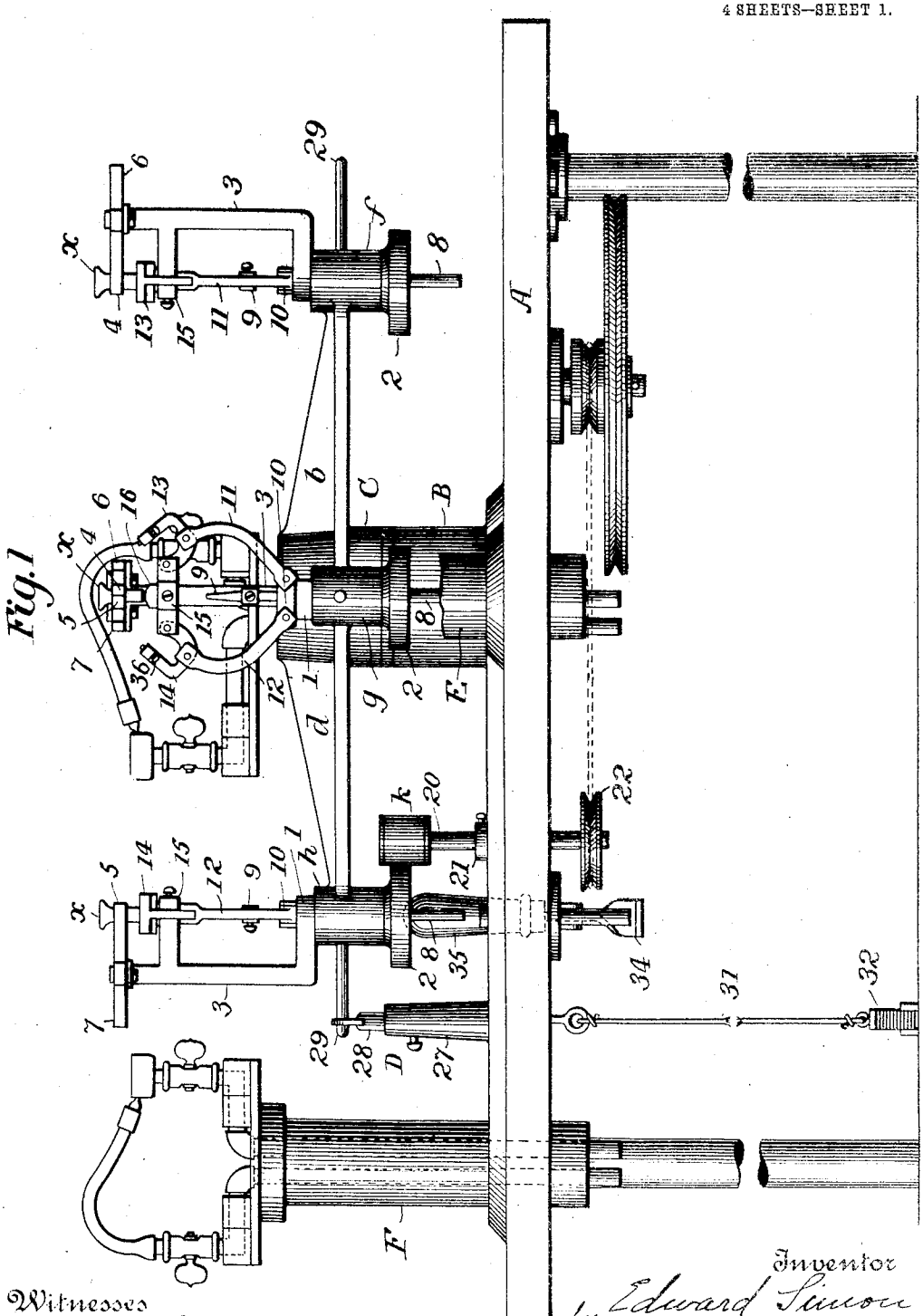

Witnesses

J. G. Stinkel

Thos. Howe

Inventor

Edward Simon

by Foster Freeman Watson Coe

Attorney

E. SIMON.

MACHINE FOR FORMING INCANDESCENT LAMP MOUNTS.

APPLICATION FILED DEC. 14, 1904.

955,442. Patented Apr. 19, 1910.

4 SHEETS—SHEET 2.

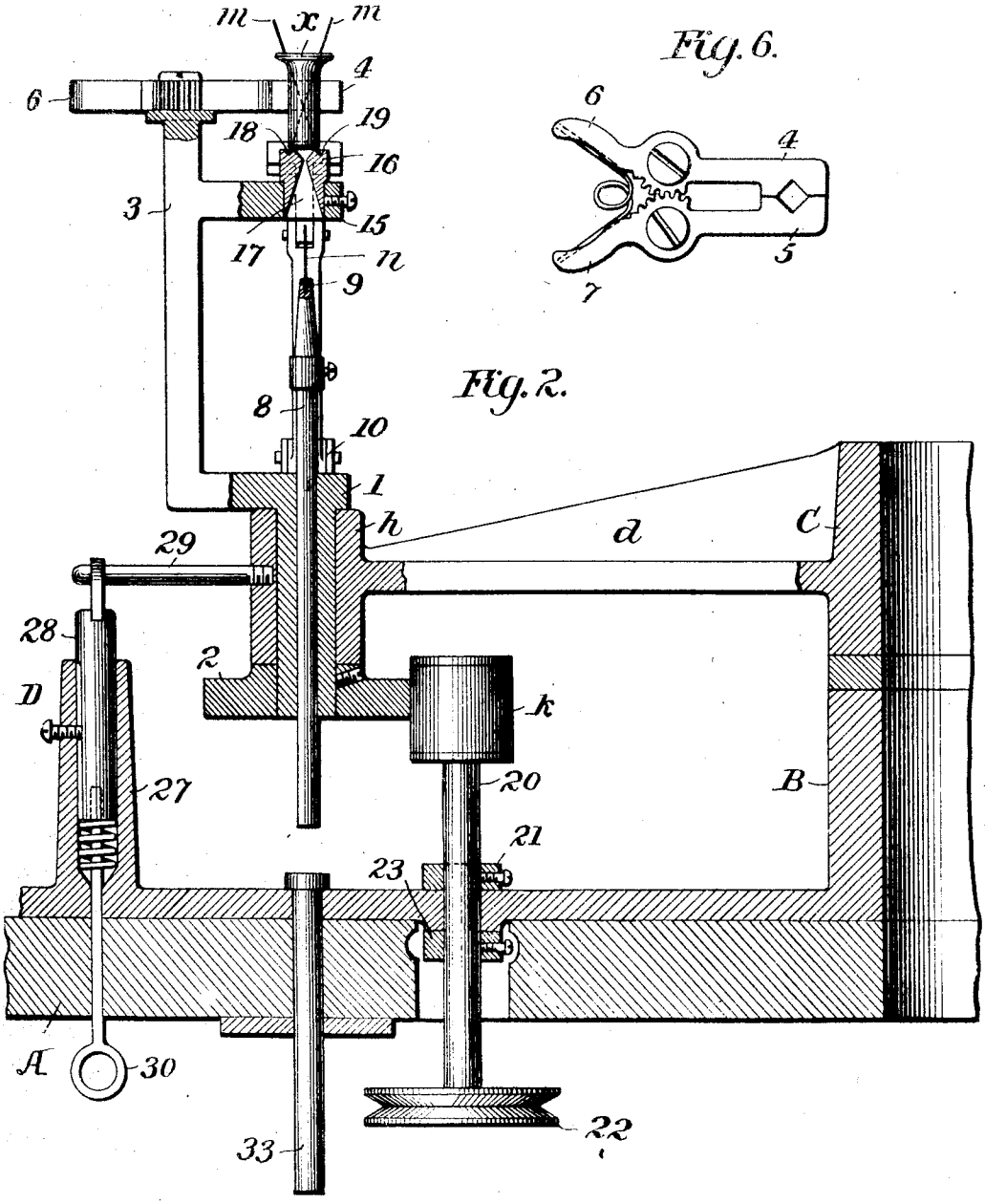

Fig. 6.

Fig. 2.

Witnesses
J. G. Hinkel
Thos. Howe.

Inventor
by Edward Simon
Fisher Freeman & Watson
Attorneys

E. SIMON.

MACHINE FOR FORMING INCANDESCENT LAMP MOUNTS.

APPLICATION FILED DEC. 14, 1904.

955,442. Patented Apr. 19, 1910.

4 SHEETS—SHEET 3.

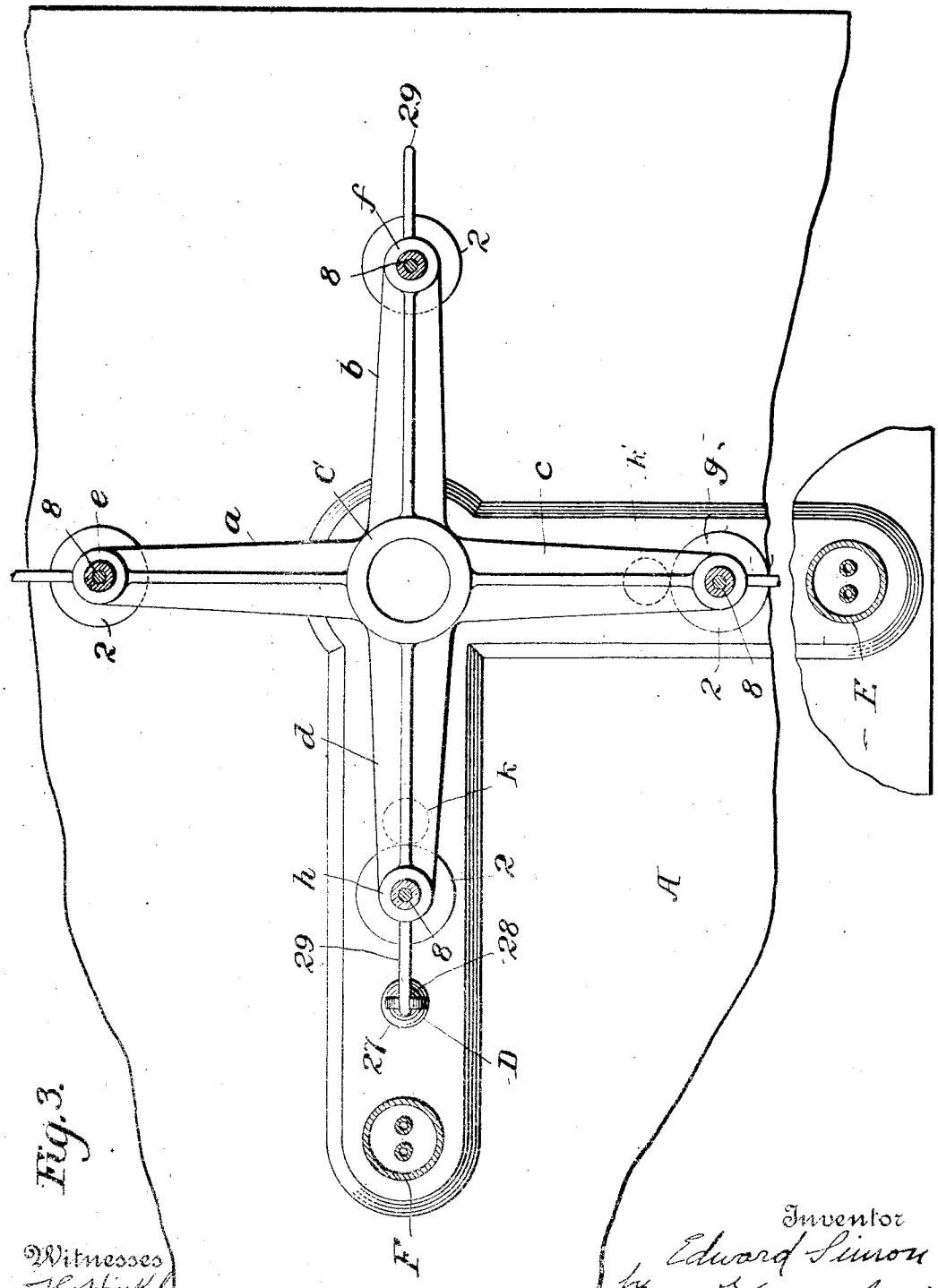

Fig. 3.

Witnesses
J. G. Stinkil
Thos. Howe

Inventor
Edward Simon
by Foster Freeman Watson Coleman
Attorneys

E. SIMON.

MACHINE FOR FORMING INCANDESCENT LAMP MOUNTS.

APPLICATION FILED DEC. 14, 1904.

955,442. Patented Apr. 19, 1910.

4 SHEETS—SHEET 4.

Fig. 4.

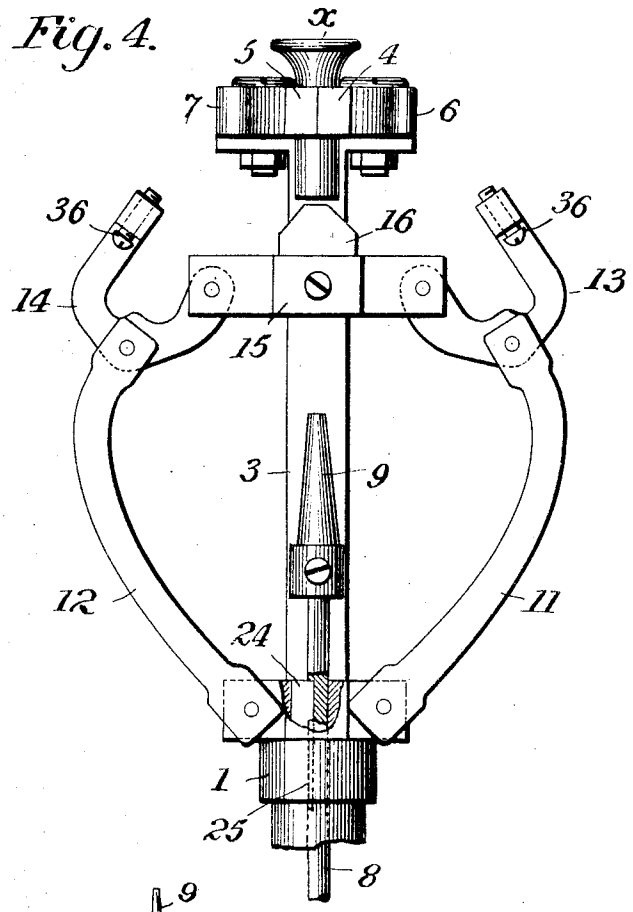

Fig. 5

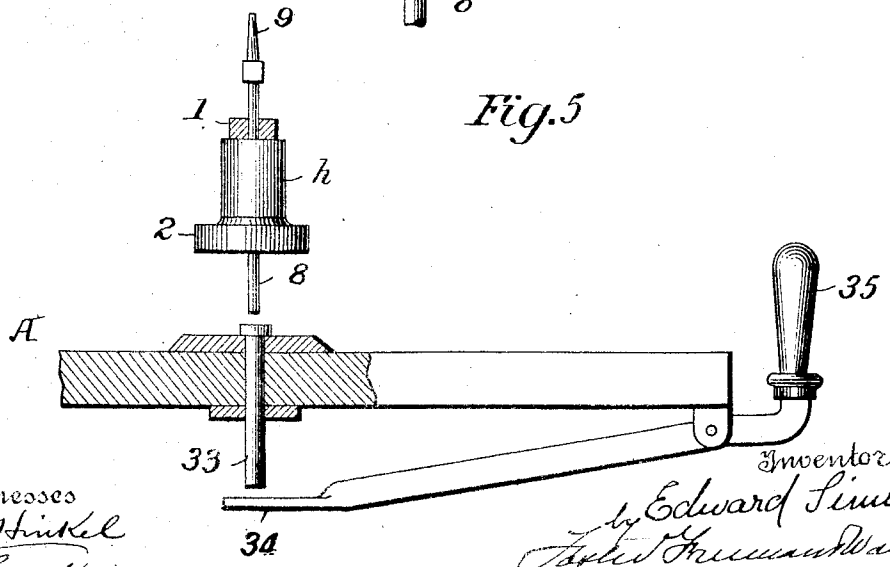

Witnesses
J. G. Stinkel
Thos. Howe

Inventor
Edward Simon
by Foster Freeman Watson
Attorneys

UNITED STATES PATENT OFFICE.

EDWARD SIMON, OF SHELBY, OHIO, ASSIGNOR, BY MESNE ASSIGNMENTS, TO GENERAL ELECTRIC COMPANY, OF SCHENECTADY, NEW YORK, A CORPORATION OF NEW YORK.

MACHINE FOR FORMING INCANDESCENT-LAMP MOUNTS.

955,442. Specification of Letters Patent. Patented Apr. 19, 1910.

Application filed December 14, 1904. Serial No. 236,895.

To all whom it may concern:

Be it known that I, EDWARD SIMON, a citizen of the United States, residing at Shelby, Richland county, State of Ohio, have invented certain new and useful Improvements in Machines for Forming Incandescent-Lamp Mounts, of which the following is a specification.

The invention relates to machines for manufacturing incandescent lamps and has for its object the provision of a machine whereby the production of the "mounts," that is, those portions of the lamps which support the "lead" and "anchor" wires is greatly facilitated.

The invention can be best explained in connection with the accompanying drawings, in which—

Figure 1 is an elevation of a machine embodying my invention; Fig. 2 is an enlarged elevation partly in section of a portion of the apparatus; Fig. 3 is a top plan view of the machine with certain parts of the apparatus removed for the sake of clearness; Fig. 4 is an enlarged view of the portions which are immediately concerned in the formation of the mount; Fig. 5 is a detail showing a means for operating the apparatus shown in Fig. 4, and Fig. 6 is a plan view of the clamps for holding the mount tube.

Referring to the drawings, A indicates a base upon which is mounted a post B, which post rotatably supports a hub C from which radiate a plurality of arms *a*, *b*, *c* and *d*. These arms are rigidly secured to the hub and at their outer ends carry hubs *e*, *f*, *g* and *h*. Upon each of the arms is mounted an apparatus for forming a mount tube as will be hereinafter further described. Mounted in the base and separated by a distance equal to that between adjacent arms are two rollers *k* and *k'* which are adapted to actuate the mount forming apparatus upon successive arms and which may be driven in any suitable manner. Also mounted upon the base is a means D for holding the arms in a given position. Located adjacent to the rollers *k* and *k'* and therefore adapted to operate upon the devices carried by adjacent arms are heating devices E and F of any approved construction.

Similar mount forming apparatus is carried upon each of the arms *a b c d* and therefore a description of one will be a description of each. Referring especially to Fig. 2, in the hub *h* upon the arm *d* is rotatably mounted the hollow shaft 1, which at its lower end has secured to it a wheel 2 adapted to engage with the roller *k*. The shaft 1 is shouldered against the upper end of the hub *h* so that endwise movement of the shaft is prevented. Where the shaft 1 emerges from the hub *h*, the arm 3 extends laterally and then vertically. To the arm 3 are pivoted the clamps 4 and 5 which may be geared together as shown in order that equal movement of the two may be secured. The clamps are normally held closed by means of a spring but may be opened by pressure upon the finger pieces 6 and 7. The centers of the clamp grips lie in the axial line of the hollow in the shaft, 1. Slidably mounted in the hollow of the shaft 1 is a plunger rod 8 which extends below the lower end of the shaft 1. At the upper end of the plunger rod 8 is provided a recess 9 for the reception of anchor wires.

Above the shaft 1 a cross head 10 is connected with the plunger rod 8. This connection may conveniently consist of a key 24 having a driving fit in the cross head and extending into a slot 25 in the plunger rod as shown clearly in Fig. 4. To this cross head are pivoted the links 11 and 12 which are also pivoted to the sealing clamps 13 and 14 which in turn are pivoted to an arm 15 projecting laterally from the arm 3. At their upper ends, the clamps 13 and 14 are provided with faces for forming the mount. Supported by the arm 15 and in line with the plunger 8 and the clamp grip is a die block 16 above which the mount is formed. The die block is made tapering at the top so that a ridge is formed upon which the mount tube or flare may rest. The apex of the ridge is of less width than the diameter of the mount tube so that access to the tube at the bottom may be obtained and the heat which impinges upon the die block may be deflected upward into the interior of the mount tube. It is further to be observed that the ridge extends parallel to the mount forming faces. If the ridge extended at right angles to the mount forming faces, the mount tube upon becoming hot might sink down upon the sides of the ridge and the coming together of the faces to form the

mount would tend to cause it to sink still farther, thus producing a ragged and unsightly structure. When, however, the ridge extends parallel to the mount forming faces according to the present invention if there is any tendency to sinking as described, the sunken portion will be forced to the top of the ridge by the forming faces and a neat, clean-cut structure be obtained.

To produce the best results the width of the top of the ridge should be at least equal to the width of the compressed portion of the formed mount so that all the material will be forced to the top of the ridge and leave none hanging down about the sides. The die block 16 has a tapering axially extending hole 17 in line with the recess 9 and with the mount tube, which is adapted to receive the end of an anchor wire placed in the recess 9 and guide the said wire into its proper position. The die block is further provided at its top with recesses 18 and 19 adapted to receive the ends of lead wires placed within a mount tube held in the clamps 4 and 5 so that the said lead wires are held in definite relative positions and their ends may project beyond the end of the mount.

The apparatus thus described as being mounted upon each of the arms, may be rotated by means of the roller k which engages with the wheel 2. The support and means for actuating a roller k will now be described and a similar apparatus is employed to support and actuate the roller k'. The roller k is fixed to a shaft 20 journaled in the base and secured against axial movement by collars 21 and 23 fixed to the shaft 20. To the lower end of the shaft 20 is fixed a driving pulley 22.

The means D for securing the arms in given position may consist of a hollow post 27 in which is mounted a spring pressed plunger 28 adapted to engage with a pin 29 extending from each of the hubs at the outer extremities of the arms a b c d. A rod 30 secured to the plunger 28 and extending downwardly through the base A provides a means whereby the plunger may be moved downwardly against its spring and out of engagement with the pin when the arms may be advanced as desired. The rod 30 may be connected by any suitable means as a cord 31 with a pedal 32 pivoted to the floor so that its operation may be effected by the foot of the operator.

To cause the plunger 8 to be moved upwardly and thereby to bring the mount forming faces of the clamps 13 and 14 together about the base of the mount tube and also to feed the anchor wire upwardly into position, a vertical rod 33 is slidably mounted in the base A and is adapted to engage at its upper end with the lower end of the plunger 8 and at its lower end is adapted to be engaged with one end of the lever 34 pivoted to the base and operated by a handle 35.

In order that the mount forming faces of the clamps 13 and 14 may be properly spaced apart so that uniform mounts will be produced, means for limiting the movement of the clamps is provided, which means is preferably carried upon the clamps and may consist in screws 36 mounted upon the forming faces.

Having described the various parts of a machine embodying my invention, I will now outline its operation.

An operator seated between the arms a and b when the machine is in the position shown in Figs. 1, 2 and 3, places in the tube-holding clamp upon the arm b, a glass mount tube as shown at x in Fig. 2. Lead wires m are then placed within the tube x so that their ends project into the recesses 18 and 19 as shown most clearly in Fig. 2. The anchor wire n having been cut to the proper length is inserted within the recess 9 at the top of the plunger 8. In the machine illustrated, provision is made for but one anchor wire, but it will be obvious that any desired number may be employed. In the position shown, the pin 29 upon the hub h upon the arm d is in engagement with the plunger 28 and the rollers k and k' bear upon the wheels 2 upon the arms c and d, so that the shafts 1 upon those arms and the apparatus carried thereby are rotated. A downward pull upon the rod 30 by means of the pedal as before described operates to release the pin 29 from the plunger 28 when the arms may be moved into the next position, that is, where the plunger 28 is in engagement with the pin 29 upon the arm c. The rollers k and k' will then be in engagement with the wheels 2 carried by the arms b and c. The flame proceeding from the heating device E which is now adjacent to the arm b will play upon the lower portion of the mount tube, x, that tube being maintained in rotation so that all sides are heated, by means of the engagement of the roller k' with the wheel 2 upon the arm b. The hub and arms are maintained in this position while the operation of forming the mount upon the arm c is being completed and during this operation the mount tube upon the arm b will receive a preliminary heating. This heating preliminary to bringing the mount into forming position and heating it the required amount for fusing the glass, very greatly reduces the liability to breakage of the mount tube and thereby greatly increases the efficiency of the apparatus. Upon the completion of the mount upon the arm c, the plunger 28 is again depressed and the arms are moved another step forward until the succeeding pin 29 comes against the plunger 28 when the rollers k and k'

will be in engagement with the wheels 2 upon the arms *a* and *b*. The mount tube upon the arm *b* has now been heated preliminarily and has been moved into forming position in which it is rotated in precisely the same manner as was the case in the next preceding position, and when the tube *x* has been sufficiently softened by the flame of apparatus F playing upon its lower end, the rod 33 is forced upwardly by an outward pull exerted by the operator upon the handle 35. The upper end of the rod 33 coming against the lower end of the plunger 8, that plunger is forced upwardly and, by reason of the key 24 coming against the lower end of the slot 25, the cross head 10 is carried upward with it. The result of thus actuating the plunger 8 is to carry upwardly the anchor wire supported by the upper end of the plunger, the upper end of the anchor wire entering the recess 17 and being guided to the inside of the mount tube. The raising of the cross head 10 operates to bring the forming faces of the clamps 13, 14, together about the base of the mount tube so that the tube is pressed together about the lead and anchor wires which are thus sealed into the mount, the approach of the forming clamps being limited by the screws mounted in their faces as before described. The formation of the mount having been completed, the arms may be released and advanced another step in the manner as before described when the arm *b* will occupy the position originally occupied by the arm *a*. In this position, it will be removed from the heat and may cool while the mount is being formed upon a succeeding arm. The completed mount may then be removed and a fresh mount tube, lead wires and anchor wire may be placed in position as before described and the operation which has been traced may be repeated, each arm succeeding another in the cycle of operations which may be carried on continuously.

According to the patent statutes, the invention has been described in connection with an apparatus which is considered to be its best embodiment, but it is to be understood that the invention may have other embodiments and it should not be limited to the construction shown in the drawings.

What I claim is:—

1. A machine for forming incandescent lamp mounts comprising a heater, a rotatable support for the mount tube, means for forming the mount, and an anchor wire support, said anchor wire support and said forming means being rotatable with the mount tube support, substantially as described.

2. A machine for forming incandescent lamp mounts comprising a heater and a rotatable frame having rotatable apparatus thereon comprising a mount tube support, an anchor wire support, and means for forming the mount, substantially as described.

3. A machine for forming incandescent lamp mounts comprising a mount tube support, means for feeding the anchor wire, means for forming the mount, and common means for operating said forming and feeding means, substantially as described.

4. The combination in a machine for forming incandescent lamp mounts, of a support for the mount tube, means for forming the mount, and means carried by said forming means for regulating the thickness of the seal, substantially as described.

5. The combination in a machine for forming incandescent lamp mounts with a rotatable support for the mount tube of means rotatable with said support for forming the mount, and means rotatable with said support and forming means for regulating the thickness of the seal, substantially as described.

In testimony whereof I have signed my name to this specification in the presence of two subscribing witnesses.

EDWARD SIMON.

Witnesses:
GEO. W. COBLE,
B. J. CATTEY.