March 25, 1924. 1,488,364

C. SNYDER

HOSE APPARATUS

Filed April 16, 1923

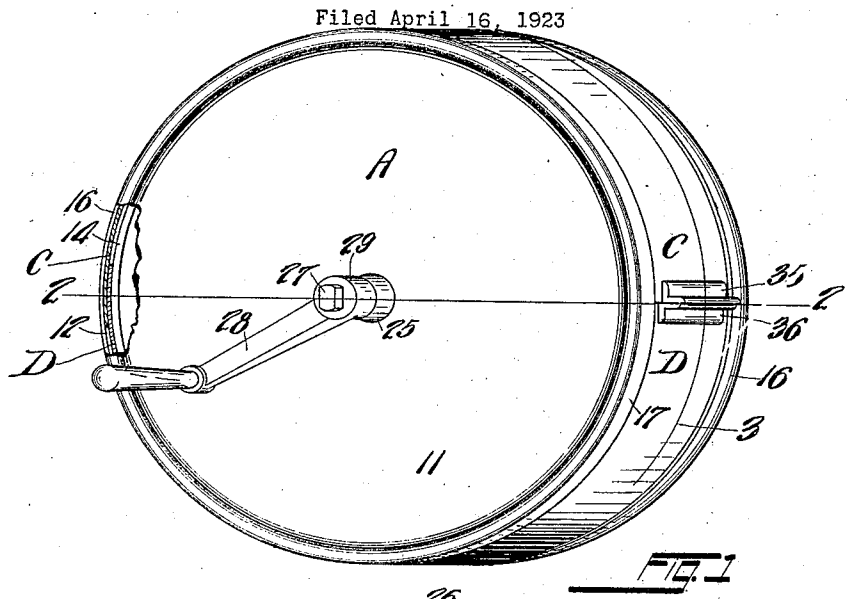

FIG. 1

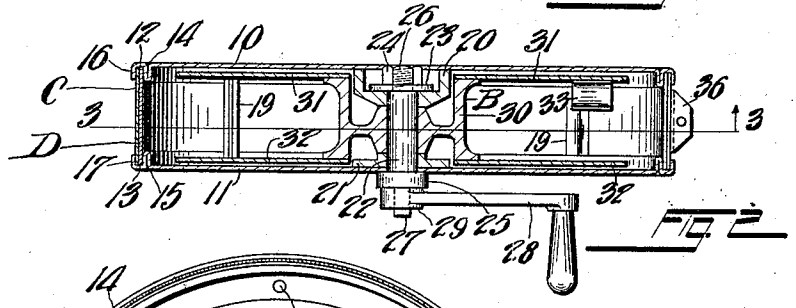

FIG. 2

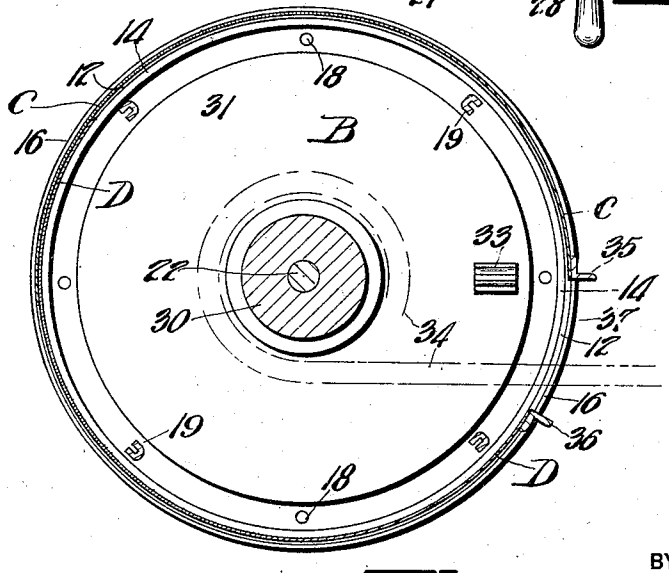

FIG. 3

INVENTOR
Carl Snyder.
BY
C. J. Kinkel.
ATTORNEY

Patented Mar. 25, 1924. 1,488,364

UNITED STATES PATENT OFFICE.

CARL SNYDER, OF CLEVELAND, OHIO.

HOSE APPARATUS.

Application filed April 16, 1923. Serial No. 632,512.

To all whom it may concern:

Be it known that I, CARL SNYDER, a citizen of the United States, and resident of Cleveland, county of Cuyahoga, and State of Ohio, have invented a new and useful Improvement in Hose Apparatus, of which the following is a specification.

My invention relates to apparatus for storing and delivering hose.

The main object of my invention is a simple and efficient apparatus to store and deliver hose and adapted to be permanently secured to a structure. Other objects will appear during the description of the apparatus shown in the drawing.

My invention is illustrated, exemplarily, in the accompanying drawing, as applied to an apparatus for storing and delivering a garden hose, although my invention may also be applied, with suitable modifications, to apparatus for either storing or delivering, or both, of articles other than the garden hose shown.

In the accompanying drawing, Fig. 1 is a general perspective view of an apparatus adapted to store and deliver a garden hose and provided with two slidably mounted arcuate doors shown closed in this view; Fig. 2 is a section on a plane indicated by the line 2 in Fig. 1 showing the relations between the elements of Fig. 1 in a horizontal plane; Fig. 3 is a section on a plane indicated by the line 3 in Figs. 1 and 2 showing the relations between the elements of Fig. 1 in a vertical plane with the doors shown partially open.

Similar reference characters refer to similar parts throughout the views.

The apparatus shown in the drawing is adapted to either store, or deliver, or store and deliver, a garden hose, adapted to be locked, to permit of all or part of the hose to be readily taken from the apparatus or stored therein, to be permanently secured to a house or other structure, and to be locked to prevent theft of the hose.

The apparatus shown in the drawing consists, principally, of the case A, the reel B, and the doors C and D.

The case A has the circular end walls 10 and 11 and each of these walls is provided with the circular channel, 12 and 13, respectively, on the outer edge thereof. These channels extend all the way around the walls and are, in the present instance, provided or formed by bending a portion of the outer edges of the walls to form the double-up inner walls 14 and 15, respectively, and by bending the outer edges of the walls to form the outer walls or flanges 16 and 17, respectively, as clearly seen in Fig. 2.

These channels may, however, be formed in other manners, with a view of providing stiffness of the case as is accomplished by the channel formation shown. If additional stiffness is required in the case, the walls may be corrugated as is well known in the art.

The wall 10, in the present instance the rear wall of the apparatus, is provided with the holes 18 to accommodate screws or other means wherewith the apparatus can be fastened or secured to a house or other permanent or movable structure. The wall 11, in the present instance the front wall, may be curved to present a better appearance of the apparatus as a whole instead of being flat as shown in the drawing.

The walls 10 and 11 are, in the present instance, permanently secured, in proper relation, to each other, by the spacers 19 which may, conveniently, be U shaped as shown and have the ends thereof secured to the walls by spot-welding or other means; thereby forming a substantially rigid case aided in rigidness by the channel formation or application previously described, economical to manufacture, and not easily tampered with.

It is noted here that this spot-welding or other such means must be performed after the reel B and the doors C and D are in position.

The bearing blocks 20 and 21 are secured to the walls 10 and 11, respectively, by spot-welding or otherwise, and the shaft 22 is journaled therein. The block 20 is countersunk to accommodate the washer 23 and the nut 24.

The shaft 22 has the collar 25 abutting the wall 11, the reduced and threaded end 26 for the washer 23 and the nut 24 to form an abutment against the block 20, and the flattened end 27. The crank 28 is provided with an opening in the hub 29 thereof which opening fits to the end 27 of the shaft 22 so that the crank 28 can readily be attached to or removed from the end 27 to prevent tampering with the reel B.

The reel B is, in the present instance, composed of the hub 30 secured to the shaft 22 by a key or other means and of the flanges

31 and 32 secured to the sides of the hub 30 by spot-welding or otherwise as clearly seen in Fig. 2.

One or more hose clips 33 may be secured to the inside of the flanges 31 or 32 to hold the ends of the hose 34 which is adapted to be wound on the reel B as is usual in such apparatus.

The door C, arcuate in form, extends over the upper portion of the walls 10 and 11 and the outer edges thereof are disposed slidably in the channels 12 and 13. The angle iron 35, provided with an opening to accommodate a lock, is secured to the front end of the door C, by spot-welding or otherwise, and forms a handle to operate the door and a means for applying a lock.

The door D, also arcuate in form, extends over the lower portion of the walls 10 and 11 and the outer edges thereof are disposed slidably in the channels 12 and 13. The angle iron 36, provided with a hole to accommodate a lock, is secured to the front end of the door D, by spot-welding or otherwise and forms a handle to operate the door and a means for applying a lock.

It is noted that both of the doors can slide, rotatably, all the way around in the channels 12 and 13, and that the rear ends thereof overlap each other a short distance when the doors are closed, as clearly seen in Fig. 1, so that the door D always slides inside of the door C when the doors are manipulated and so that the doors may not abut each other and prevent the opening of the case.

Fig. 1 shows the doors closed and the angle irons or handles abutting each other ready for the application of a lock thereto. Fig. 3 shows the door D partly rotated in the channels to provide the opening 37 through which the hose 34 can be inserted or removed. Since each of the doors C and D extends a little more than half way around in the channels, either one of the doors may be rotated and opened a little less than half way around the outside of the case; or both doors may be rotated to any suitable position to provide an opening in the outside of the case of any suitable capacity within the scope of the apparatus and in whatever position such opening is desired for convenient manipulation of the hose.

When the hose is wound on the reel and the doors closed, as seen in Fig. 1, and locked, and the crank removed from the end of the shaft, the hose can not be tampered with or removed from the apparatus except by partial or total destruction of the case.

Further operations of this apparatus, such as the operation of the reel, are well known in the art and need no detailed explanation here.

This apparatus, having a fixed case, permits the hose to be wound on the reel therein without inconvenience and the hose will drain itself as it is so wound on the reel, thereby not only preserving the hose but also eliminating the usual inconveniences of handling a wet hose.

The apparatus shown and described is economical of manufacture, easy of operation, provides a permanent and efficient means for storing and delivering a hose, prevents the theft of a hose, can be installed in any convenient place, always ready for the delivery of a hose in any direction or for inserting a hose from any direction, and eliminates carrying the hose back and forth and prolongs the life of a hose since it protects it from the effects of the weather and eliminates promiscuous handling of the hose.

Modifications, other than those pointed out, may be made; therefore, without limiting myself to the precise construction shown and described,

I claim:—

1. A hose apparatus comprising, two stationary end walls secured to each other and one of these walls adapted to be secured to a support, a hose reel journaled on said end walls, and door means between said end walls and adapted to either form a complete closure for said apparatus or to selectively provide an opening at any place along the outer surface between said end walls of said apparatus.

2. A hose apparatus comprising, two stationary end walls secured to each other and one of these walls adapted to be secured to a support, a hose reel journaled on said end walls and actuated by a removable crank on the outside of the other of said end walls, and door means between said end walls and adapted to either form a complete closure for said apparatus or to selectively provide an opening at any place along the outer surface between said end walls of said apparatus.

3. A hose apparatus comprising, two stationary end walls secured to each other and one of these walls adapted to be secured to a support and each of these walls provided with a circular channel facing each other, two arcuate doors one over the other and each slidable all around in said channels, and a hose reel journaled on said end walls.

4. A hose apparatus comprising, two stationary end walls each provided with a circular channel, door means composed of two arcuate members one slidable over the other and each slidable all around in said channels, either one of said members rotatable in said channels in either direction to either form a complete closure for said apparatus or to selectively provide an opening at any place along the outer surface between said end walls of said apparatus, and a hose reel journaled on said end walls.

5. A hose apparatus comprising, two stationary end walls, door means between said end walls, a journal bracket mounted on each of said end walls, at least one of said brackets extending inward of the end wall to which it is secured, a shaft journaled in said brackets and one end thereof inside of the outside of said end wall to which said inwardly extending bracket is secured and the other end thereof projecting beyond the outside of the other of said end walls and provided with means to engage a removable crank, and a reel composed of a hub secured to said shaft and abutting both of said journal brackets and of a flange on each end of said hub to confine said hose to said reel.

6. A hose apparatus comprising, two stationary end walls each provided with a circular channel, door means composed of two arcuate members, one slidable over the other and each slidable all around in said channels, either one of said members rotatable in either direction to either form a complete closure for said apparatus or to selectively provide an opening at any place along the outer surface between said end walls of said apparatus, a journal bracket mounted on each of said end walls, at least one of said brackets extending inward of the end wall to which it is secured, a shaft journaled in said brackets and one end thereof inside of the outside of said end wall to which said inwardly extending bracket is secured and the other end thereof projecting beyond the outside of the other of said end walls and provided with means to engage a removable crank, and a reel composed of a hub secured to said shaft and abutting both of said journal brackets and of a flange on each end of said hub to confine said hose to said reel.

CARL SNYDER.