Nov. 10, 1936. H. D. LEARNARD ET AL 2,060,511

PILLOWCASE TURNER AND DOFFER

Filed Nov. 3, 1934 2 Sheets-Sheet 1

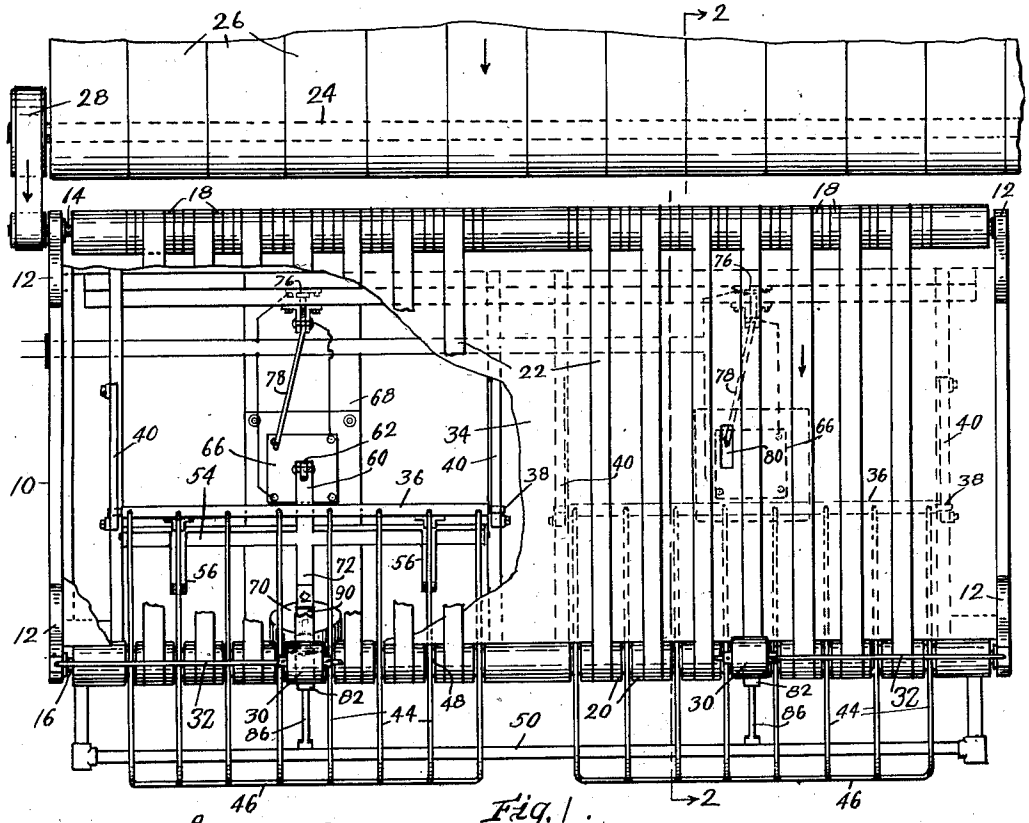

Fig. 1.

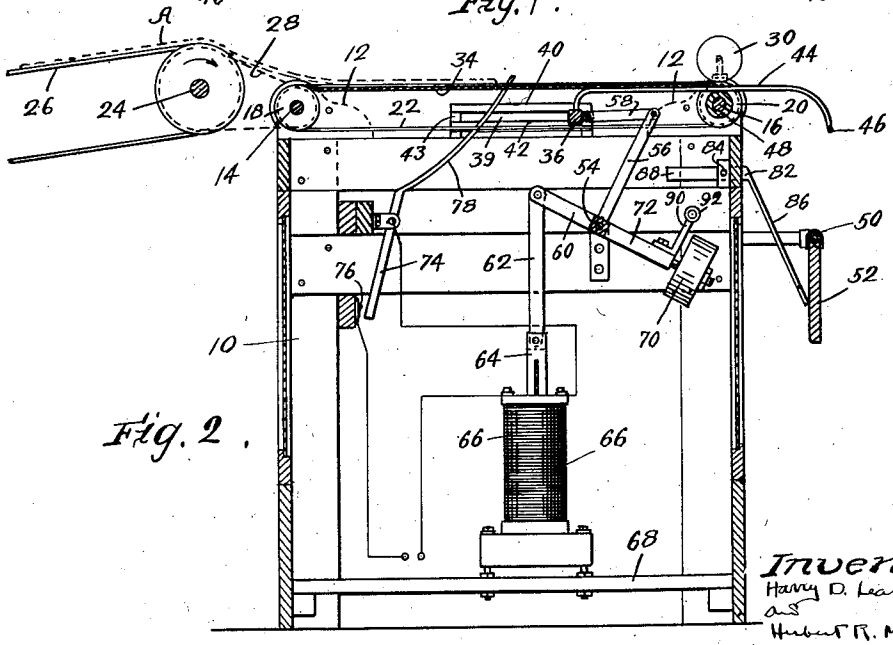

Fig. 2.

Inventor.
Harry D. Learnard
and
Hubert R. Matheson
by
T. J. Greenwood Atty

Nov. 10, 1936. H. D. LEARNARD ET AL 2,060,511

PILLOWCASE TURNER AND DOFFER

Filed Nov. 3, 1934 2 Sheets-Sheet 2

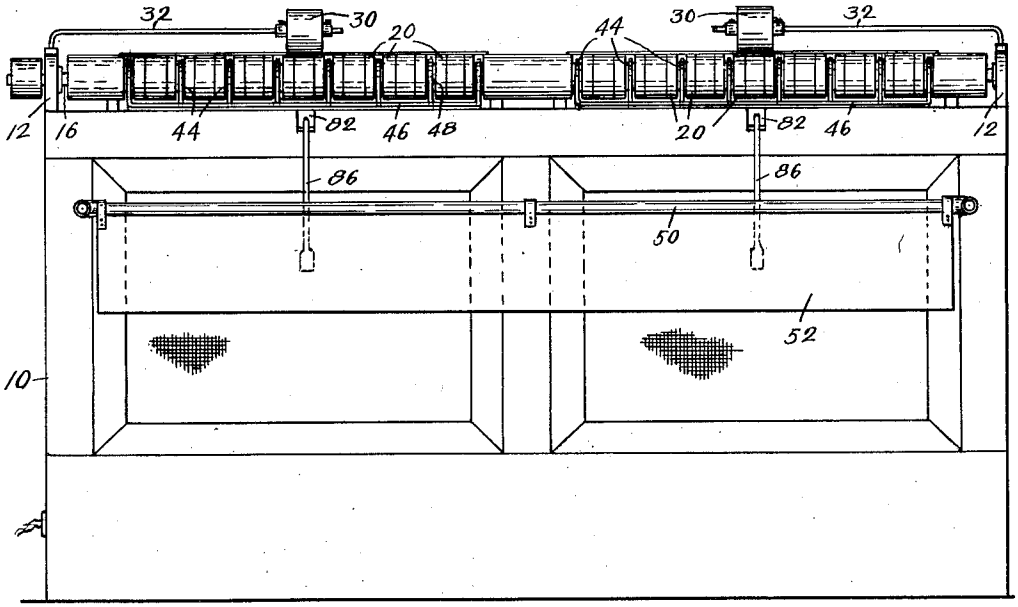

Fig. 3.

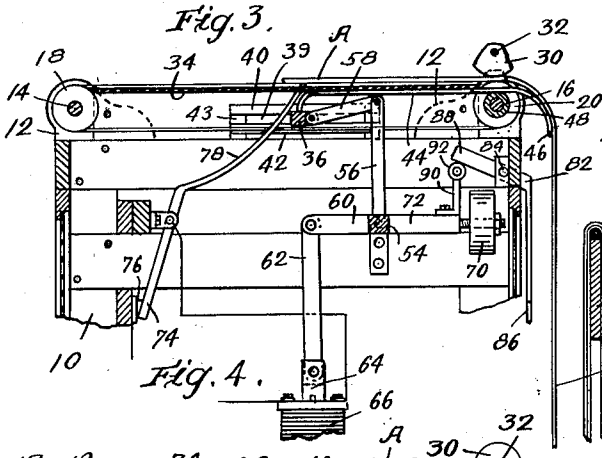

Fig. 4.

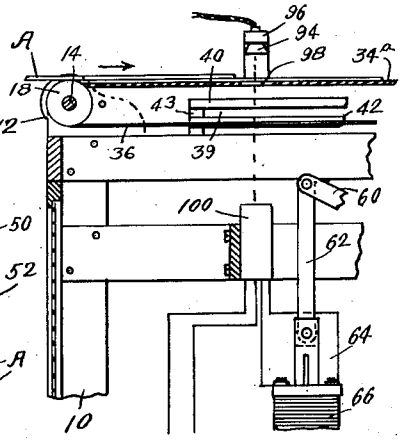

Fig. 7.

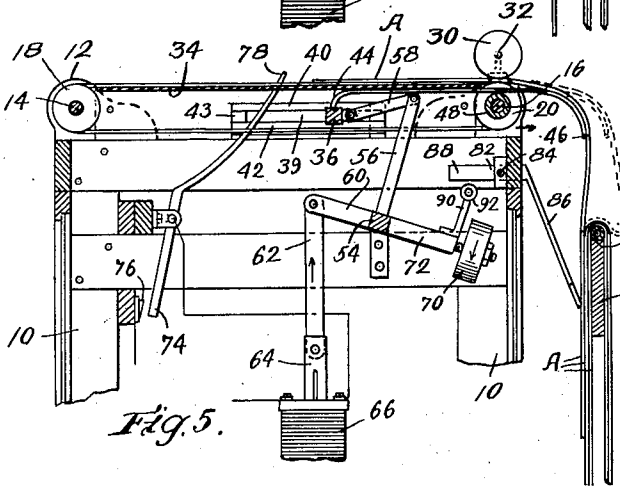

Fig. 5.

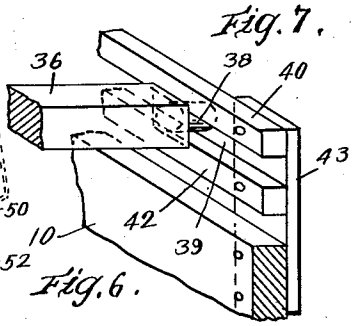

Fig. 6.

Inventor,
Harry D. Learnard
and Herbert R. Matheuson
by T. T. Greenwood Atty

Patented Nov. 10, 1936

2,060,511

UNITED STATES PATENT OFFICE

2,060,511

PILLOWCASE TURNER AND DOFFER

Harry D. Learnard and Herbert R. Mathewson, Lyman, S. C., assignors to Pacific Mills, Lawrence, Mass., a corporation of Massachusetts

Application November 3, 1934, Serial No. 751,363

18 Claims. (Cl. 271—63)

This invention relates to a machine for doffing and turning articles such as pillowcases and the like coming from the mangle.

One of the objects of the present invention is the provision of a pillowcase doffer and turner that receives the hot pillowcases off the mangle and automatically doffs them in reverse position upon a bar or other support from which the cases can be subsequently removed after they have cooled sufficiently to permit handling without personal discomfort.

Another object is the provision of a pillowcase doffing machine arranged to pile or stack doffed pillowcases one upon the other in order to facilitate subsequent handling thereof.

A further object is in an improved turning and doffing machine the operation of which is controlled by the pillowcases handled by it in such manner that the passage of a predetermined part of the pillowcase through a predetermined position effects the actuation of the turning mechanism.

A further object of the invention is the provision of a turning and doffing machine wherein the pillowcases are advanced by belts over a reciprocating turning frame, the reciprocation of which is governed by the pillowcases, for doffing and turning the cases.

A further object is generally to improve the construction of pillowcase turning and doffing machines.

Fig. 1 is a plan view partly broken away of a pillowcase turning and doffing machine embodying the present invention.

Fig. 2 is a sectional elevation taken along line 2—2 of Fig. 1.

Fig. 3 is a front elevation of the machine of Fig. 1.

Fig. 4 is a sectional detail similar to Fig. 2 but illustrating the position of the parts just prior to the control of the parts to effect the folding of the case.

Fig. 5 is a view similar to Fig. 4 but showing the position of the mechanism just after the holding lever for the pillowcases has been moved into operated position.

Fig. 6 is a perspective detail of a slide for the turning frame.

Fig. 7 is a sectional detail similar to Fig. 4 but illustrating the use of photoelectric instead of mechanical control mechanism.

The pillowcase turning and doffing machine embodying the present invention is adapted to be located at the delivery end of an ironing machine or mangle to receive the freshly ironed pillowcases discharged from the conveyor belt of the mangle and to advance them and deposit them in reversed and folded condition in a convenient location for removal.

The machine comprises a generally rectangular frame structure 10 having at its top sets of front and rear brackets 12, a driving shaft 14 being journalled in the rear brackets and a stationary shaft 16 being fixed in the front brackets. The driving shaft 14 has a plurality of pulleys 18 all of the same diameter fixed thereto and the shaft 16 has a corresponding plurality of idler pulleys 20 all of the same diameter journalled thereon. Conveyor tapes or belts 22 are passed about the respective sets of driving and idler pulleys and the horizontal upper passes thereof are adapted to support and advance the pillowcases.

The machine is disposed close to the delivery end of an ironing machine or mangle with the driving shaft 14 close to and parallel with and below a shaft 24 of the mangle, which shaft supports belts 26 that advance the hot pillowcases from the ironing surfaces. The tapes 22 of the doffer are driven at approximately the linear speed of the tapes or belts 26 of the mangle by a driving belt 28 that connects the mangle shaft 24 with the doffer shaft 14. Press rolls 30 are superimposed above certain of the tapes 22 on the idler rolls 20 and are held yieldingly thereagainst by resilient rods 32 so as to hold the pillowcases from movement with respect to the belts at times when a substantial part of the length of a pillowcase overhangs the discharge end of the conveyor system. A cover plate 34 preferably closely underlies the top passes of the tapes so as to prevent the pillowcase from sagging between the tapes and also to shield the mechanism thereunder.

The tapes of the doffer are grouped into right and left hand sections, as is indicated in Fig. 1, and each section is provided with the same operating mechanism. Each section is provided with a reciprocating folding frame which comprises a horizontal bar 36 disposed beneath the cover plate 34 between and transversely of the upper and lower passes of the tapes. The opposite ends of the bar are provided with cylindrical extensions 38, see especially Fig. 6, which are movable longitudinally in the guide space 39 provided by upper and lower guide bars 40 and 42 respectively, which guide bars at the ends are suitably supported by brackets 43 attached to the frame of the machine. A plurality of horizontal rods 44 are located between the tapes 22 close under the upper passes thereof and have their inner ends fixed to the bar 36.

The outer or forward end portions of the rods are also curved in a downward direction and their extremities are connected by a cross rod 46. The rods 44 are supported in horizontal position as they reciprocate by resting upon the faces of spacer discs 48 journalled on the forward shaft 16 between the idler rolls 20.

The pillowcases discharged from the conveyor system are adapted to be draped by the folding frame upon a horizontal cylindrical pillowcase receiving bar 50 that is carried by the machine frame and is spaced forwardly thereof below the end of the folding frame. The bar, immediately thereunder is provided with a depending plate 52 that separates the folded sections of a pillowcase hanging on the bar and cooperates with a holding device, presently to be explained, to hold the pillowcase on the bar as the pillowcase is being draped across the bar.

The folding frame is adapted to be reciprocated in such manner that its forward end moves between positions forwardly and rearwardly of the bar 50 while above the bar. The folding frame is reciprocated by mechanism that includes a lever structure comprising a horizontal cross bar 54 pivoted to the frame under the tapes and having adjacent its ends and rigid therewith a pair of upstanding arms 56 which are pivotally connected through links 58 with the slide bar 36 of the folding frame. The cross bar 54 is also provided at the middle thereof with a rearwardly extended arm 60 that is pivotally connected through a link 62 with the plunger 64 of a solenoid 66, the solenoid being suitably supported by a frame member 68 and preferably being mounted for vertical adjustment thereon. With this arrangement it is apparent that when the solenoid is energized the folding frame is caused to be retracted or moved towards the left. The folding frame is normally maintained in an advanced position by a weight 70 that is adjustably screw-threaded on the forward end of an arm 72 rigid with the cross bar 54 of the operating mechanism, the mass of the weight being such that when the solenoid is de-energized it rotates the cross bar 54 in a clockwise direction and thus effects the advance of the folding frame, the fully advanced position of the frame being defined by the engagement of the cylindrical ends 38 of the slide bar 36 with the supports 43 for the guide bars 40 and 42. The retracted position of the folding frame is suitably defined by the engagement of the plunger 64 with the bottom of the solenoid.

The energization of the solenoid, in all figures except Fig. 7, is controlled by a gravity-opened switch having a pivoted freely-moving blade 74 which is movable into and out of engagement with a stationary contact member 76, the circuit between the solenoid, switch and power source being obvious. The switch blade 74 is provided with a light upwardly-extended feeler arm 78 that projects through a slot 80 in the cover located approximately midway between the front and rear shafts 16 and 14 and also approximately midway between the belt passes of the belt group with which it is associated. The position of the upper end of the feeler arm with respect to the length of the belts, is determined by the length of the pillowcases conveyed by the belts. The feeler arm in the open position of the switch projects slightly above the top passes of the belts or tapes and is adapted to be depressed by engagement with a pillowcase to close the switch and energize the solenoid and thereby effect the retraction of the folding frame and also to hold the solenoid energized and the frame retracted so long as there is a pillowcase in engagement with the feeler arm.

The operation of the device is essentially as illustrated in Figs. 2, 4, and 5. A pillowcase A is delivered from the belts 26 of the mangle onto the upper passes of the tapes 22 and the tapes advance the pillowcase at approximately the speed of the belts of the mangle. When the forward edge of the pillowcase engages the feeler arm 78 it depresses the feeler arm and thereby closes the switch and energizes the solenoid. The folding frame is thus retracted to the position illustrated in Fig. 4. The pillowcase advances and the forward end thereof passes off the tapes and over the forward edge of the folding frame and down into the space between the front part of the machine structure and the bar 50. When the trailing edge of the pillowcase advances beyond the feeler arm the arm rises by the weight of its associated parts and the switch opens thereby de-energizing the solenoid. The weight 70 then advances the folding frame to the forward position illustrated in Fig. 2 wherein the forward end of the folding frame is disposed above and forwardly of the bar 50. This advancing movement of the folding frame carries the depending part of the pillowcase forwardly against and the upper depending part across the bar 50, the pillowcase being held by the press roll 30 from being drawn forwardly on the tapes faster than the movement of the tapes by the unsupported leading end portion of the pillowcase. The continued advance of the tapes and the pillowcase causes the case to be fed downwardly in front of the bar 50 so that when the pillowcase is finally released from the tapes its rear portion will overhang the bar on the forward side thereof. During the folding operation the pillowcase obviously is turned so that the upper face thereof is on the inside of the fold. The operation is repeated with succeeding pillowcases. The heated surface of the pillowcase, which is uppermost on the conveyor tapes, is thus in the inside of the folded case on the bar 50, so that the cooler face can be handled by an operative in removing it from the bar. The arrangement also permits the case to remain on the bar sufficiently long to become cool enough for handling before an operative need remove them. It is sometimes advantageous to allow a pile of superposed pillowcases, one lying upon the other, to collect upon the bar in order to facilitate the handling thereof.

Mechanism is provided for clamping the pillowcase to the bar as the rear part of the pillowcase is being draped over the bar. Said mechanism includes a lever 82 pivoted at 84 to the frame of the machine and having a forward and downwardly inclined clamping finger 86 that confronts the plate 52 of the bar 50. The inner end 88 of the lever 82 is relatively massive so that it functions as a weight when the lever is free to swing in a counterclockwise direction, to advance the lower end of the finger 86 forwardly and hold it sufficiently firmly against a pillowcase overlying on the plate 52 to prevent movement of the pillowcase.

The operation of the lever 82 is controlled by the operation of the folding frame. The lever 82 is disposed above the arm 72 of the reciprocating mechanism for the folding frame. Said arm carries an upward extension 90 terminated in a roller 92 that is adapted to bear against the lower face of the lever 82. When the solenoid is energized the lever 82 is held in an unoperated position by the roller as indicated in Fig. 4. In

this position the clamping finger is distant from the bar-plate so that a pillowcase can pass between it and the bar. When, however, the solenoid is de-energized the roller **92** moves free from the lever and the weighted end of the lever causes the finger **86** to move outwardly into holding engagement with the pillowcase. The arrangement is such that the lever **82** moves into operative or holding position at the first part of the operating movement of the frame operating mechanism and before the forward end of the folding frame has passed across the bar **50**.

In the modification illustrated in Fig. 7 the feeler switch of the previous modification is replaced by a photoelectric device. In this modification a light source **94** is supported on a suitable bracket **96** above the top passes of the conveyor tapes to direct its beam of light between two of the tapes and through an aperture **98** in the top plate **34***a*. It is apparent, of course, that the beam of light will be intercepted by a pillowcase advancing on the tapes. The beam of light is directed into a case **100** containing a photoelectric cell and a relay, neither of which need be illustrated as they are now common in the art. Normally the light from the light source activates the photoelectric cell to energize the associated relay thereby holding open the contacts thereof and maintaining the circuit of the solenoid **66** open. When, however, a pillowcase passes under the light source and intercepts the light beam the photoelectric cell and its associated relay are de-energized and the relay consequently closes the circuit for the solenoid. The action of the device in operating the reciprocating frame is the same as has been described with the feeler-controlled switch of the first modification.

We claim:

1. A pillowcase doffing system comprising a conveyor belt system on which the pillowcases are supported and advanced, a delivery bar disposed below and forwardly of the forward end of said belt system, a reciprocating frame for draping the pillowcases upon said bar, said frame being disposed behind and under the pillowcases as they pass from said conveyor and being reciprocable into positions respectively rearwardly and forwardly of said bar, and means controlled by the pillowcases on said conveyor for effecting reciprocation of said frame.

2. A pillowcase doffing machine comprising a conveyor system on which the freshly ironed pillowcases are conveyed and advanced, a support for the pillowcases discharged from said system, said support being disposed under and crosswise of the line of advance of the pillowcases on said conveyor system, a reciprocating frame for turning the pillowcases, said frame being above said support, means for supporting said frame for reciprocatory movement crosswise of said support, and means controlled by the pillowcases on said conveyor system for governing the reciprocation of said frame.

3. A pillowcase doffing machine comprising front and rear pulleys, conveyor belts on which the pillowcases are supported and advanced passed about said pulleys, a delivery bar located below and forwardly of said front pulleys and crosswise of said belts, a frame having a forward member which underlies and is adapted to engage the pillowcase as it passes from the belts and is above said bar, said forward member of said frame being advanceable from a position rearwardly of said delivery bar to a position forwardly thereof for moving a part of a pillowcase across said bar, said frame having means which supports that part of the pillowcase that is between said forward member and said belts during the advance of said frame, and means for reciprocating said frame.

4. A pillowcase doffing machine comprising front and rear pulleys, conveyor belts on which the pillowcases are supported and advanced passed about said pulleys, a delivery bar located below and forwardly of said front pulleys and crosswise of said belts, a frame having a forward member which underlies and is adapted to engage the pillowcase as it passes from the belts and is above said bar, said forward end of said frame being advanceable from a position rearwardly of said delivery bar to a position forwardly thereof for moving a part of a pillowcase across said bar, said frame having means which supports that part of the pillowcase that is between said forward member and said belts during the advance of said frame, and means controlled by the pillowcase on said belts for controlling the reciprocation of said frame.

5. Pillowcase doffing mechanism comprising front and rear pulleys, conveyor tapes passed about said pulleys on which the pillowcases are supported and advanced, a delivery bar disposed below and forwardly of said front pulleys, a reciprocating frame which closely underlies said tapes and has a forward part which is disposed above said delivery bar and is reciprocable between positions respectively rearwardly and forwardly thereof, said frame having rearwardly extended members which underlie and provides support for the pillowcases forwardly of said tapes during the reciprocation of said frame, and means for reciprocating said frame.

6. A pillowcase doffing machine comprising front and rear pulleys, conveyor belts passed about said pulleys on which the pillowcases are supported and advanced, a delivery bar located below and forwardly of said front pulleys, a reciprocating frame comprising a series of horizontal rods disposed between said tapes closely under the upper passes thereof and having forward ends which are reciprocable into positions respectively rearwardly and forwardly of said delivery bar for draping the pillowcases upon said bar, and means for reciprocating said frame.

7. A pillowcase doffing machine comprising front and rear pulleys, conveyor belts passed about said pulleys on which the pillowcases are supported and advanced, a delivery bar located below and forwardly of said front pulleys, a reciprocating frame comprising a series of horizontal rods disposed between said tapes closely under the upper passes thereof and having forward ends which are reciprocable into positions respectively rearwardly and forwardly of said delivery bar for draping the pillowcases upon said bar, means for reciprocating said frame including an electromagnet, a lever system pivotally connected with said frame and at one end with said electromagnet, and a weight at the other end of said lever system whereby said electromagnet and weight can move said frame alternately in opposite directions.

8. A pillowcase doffing machine comprising front and rear pulleys, conveyor tapes passed about said pulleys on which the pillowcases are supported and advanced, a delivery bar located below and forwardly of said front pulleys, a horizontal frame disposed below the top passes of said tapes and above said bar, said frame being reciprocable to position the forward part thereof

alternately into positions rearwardly and forwardly of said bar, weight operated means for advancing said frame, electromagnetic means for retracting said frame and holding it in retracted position, and means responsive to the passage of pillowcases on said conveyor tapes for controlling the energization of said electromagnet.

9. A pillowcase doffing machine comprising front and rear pulleys, conveyor tapes passed about said pulleys on which the pillowcases are supported and advanced, a delivery bar located below and forwardly of said front pulleys, a horizontal frame disposed below the top passes of said tapes and above said bar, said frame being reciprocable to position the forward part thereof alternately into positions rearwardly and forwardly of said bar, electromagnetic means for retracting said frame and holding it in retracted position, weight operated means for advancing said frame when said frame is released for movement by de-energization of said electromagnetic means, and means governed by the pillowcases on said conveyor tapes for controlling the energization of said electromagnet.

10. A pillowcase doffing machine comprising front and rear pulleys, conveyor tapes passed about said pulleys on which the pillowcases are supported and advanced, a delivery bar located below and forwardly of said front pulleys, a horizontal frame disposed below the top passes of said tapes and above said bar, said frame being reciprocable to position the forward part thereof alternately into positions rearwardly and forwardly of said bar, electromagnetic means for retracting said frame and holding it in retracted position, weight operated means for advancing said frame when permitted by the de-energization of said electromagnetic means, means governed by the pillowcases on said conveyor tapes for controlling the energization of said electromagnet, said means comprising a switch for the circuit of said electromagnet, and a switch-operating feeler arm disposed in the path of movement of the pillowcases on said conveyor belts and arranged to be depressed by the passage of a pillowcase thereover.

11. A pillowcase doffing machine comprising front and rear pulleys, conveyor belts passed around said pulleys on which the pillowcases are supported and conveyed, a delivery bar located below and forwardly of said front pulleys on which the pillowcases are adapted to be draped, a reciprocable frame having a part that is engageable with the forward free parts of the pillowcases and is reciprocable across said bar for draping the pillowcases upon said delivery bar, electromagnetic means for effecting the retraction of said folding frame, and weight operated means for effecting the advance of said folding frame.

12. A pillowcase doffing machine comprising front and rear pulleys, conveyor belts passed around said pulleys on which the pillowcases are supported and conveyed, a delivery bar located below and forwardly of said front pulleys on which the pillowcases are adapted to be draped, a reciprocable frame having a part that is engageable with the forward free parts of the pillowcases and is reciprocable across said bar for draping the pillowcases on said delivery bar, electromagnetic means for effecting the retraction of said folding frame, weight operated means for effecting the advance of said folding frame, and means governed by the pillowcase on said belts for effecting the control of said electromagnet.

13. A pillowcase doffing machine comprising a conveyor belt system on which the pillowcases are supported and conveyed, a delivery bar located below and forwardly of said conveyor system, means including a reciprocating frame having a part that is engageable with the pillowcases and is reciprocable backwardly and forwardly of said delivery bar for draping the pillowcases on said delivery bar, and means for holding the pillowcases engaged with said bar during the draping operation of said reciprocating frame.

14. A pillowcase doffing machine comprising a conveyor belt system on which the pillowcases are supported and conveyed, a delivery bar located below and forwardly of said conveyor system, means including a reciprocating frame having a part that is engageable with the pillowcases and is reciprocable backwardly and forwardly of said delivery bar for draping the pillowcases on said delivery bar, means for holding the pillowcases engaged with said bar during the draping operation of said reciprocating frame, comprising a lever having a clamping foot movable into a position wherein it clamps the pillowcase upon said bar, and means responsive to the movement of said frame for effecting the operation of said lever.

15. A pillowcase doffing machine comprising a conveyor belt system on which the pillowcases are supported and conveyed, a delivery bar located below and forwardly of said conveyor system, means including a reciprocating frame having a part that is engageable with the pillowcases and is reciprocable backwardly and forwardly of said delivery bar for draping the pillowcases on said delivery bar, means for holding the pillowcases engaged with said bar during the draping operation of said reciprocating frame, comprising a lever having a clamping foot movable into a position wherein it clamps the pillowcase upon said bar, and operating mechanism for effecting the reciprocation of said reciprocating frame and also of said lever.

16. A pillowcase doffing machine comprising a conveyor belt system on which the pillowcases are supported and conveyed, a delivery bar located below and forwardly of said conveyor system, means including a reciprocating frame having a part that is engageable with the pillowcases and is reciprocable backwardly and forwardly of said delivery bar for draping the pillowcases on said delivery bar, means for holding the pillowcases engaged with said bar during the draping operation of said reciprocating frame, comprising a lever having a clamping foot movable into a position wherein it clamps the pillowcase upon said bar, and operating mechanism for said reciprocating frame and lever comprising a lever member reciprocable with said frame having a part movable into and out of engagement with said clamping lever.

17. A pillowcase doffing machine comprising a conveyor system on which the pillowcases are supported and conveyed, a delivery bar located below and forwardly of said conveyor system, a reciprocating frame having a part that is engageable with the pillowcases and is reciprocable backwardly and forwardly of said delivery bar for draping the pillowcases delivered from said conveyor system upon said bar, a clamping lever for clamping the pillowcases against said bar during the draping operation, and means for effecting movement of said clamping lever into clamping position prior to the effective draping movement of said folding frame.

18. A pillowcase doffing machine comprising a supporting frame having front and rear pulleys, horizontal conveyor belts passed about said pulleys on which the pillowcases are supported and advanced, a delivery bar located below and forwardly of said front pulleys, a reciprocating frame comprising a transverse bar disposed transversely of and below the top passes of said conveyor belts, means providing guide ways in which the ends of said bar reciprocate, a series of parallel horizontal rods connected with said bar and disposed beneath and close to and between the upper passes of said belts and extended forwardly of said front pulleys, said frame being reciprocable between positions wherein the forward ends of said rods are respectively rearwardly and forwardly of said delivery bar, a lever system connected with said frame for reciprocating it, means including a solenoid connected with said lever system for reciprocating said folding frame in one direction, a weight associated with said lever system for reciprocating said frame in the opposite direction, and means governed by the pillowcases on said belts for controlling the energization of said solenoid.

HARRY D. LEARNARD.
HERBERT R. MATHEWSON.