United States Patent

Vincent

[15] 3,664,092

[45] May 23, 1972

[54] COLLECTING APPARATUS FOR ELECTROSTATIC PRECIPITATORS

[72] Inventor: **James Henry Vincent**, Plainfield, N.J.

[73] Assignee: **American Standard Inc.**, New York, N.Y.

[22] Filed: **Aug. 24, 1970**

[21] Appl. No.: **66,328**

[52] **U.S. Cl.** **55/112**, 55/131, 55/136, 55/150, 55/154, 55/300, 55/423, 55/430, 55/466, 55/485, 55/486, 55/529

[51] **Int. Cl.** **B03c 3/76**

[58] **Field of Search** 55/112, 130, 131, 132, 136–139, 55/154–156, 150, 300, 423, 430, 466, 485, 486, 529

[56] **References Cited**

UNITED STATES PATENTS

2,634,818	4/1953	Wintermute	55/132
311,036	1/1885	Rollins	55/430
1,047,765	12/1912	Derby	55/444
3,483,669	12/1969	Glaeser et al.	55/112
2,976,951	3/1961	Laqarias	55/112 X
907,633	12/1908	Narowetz	55/259 X
907,634	12/1908	Narowetz	55/259

FOREIGN PATENTS OR APPLICATIONS

471,795	2/1929	Germany	55/130
12,907	10/1928	Australia	55/154
448,504	7/1928	Germany	55/130
1,002,769	8/1965	Great Britain	55/122
959,655	6/1964	Great Britain	55/101

OTHER PUBLICATIONS

John H. Perry, Editor, Chemical Engineers' Handbook, Third Edition, McGraw-Hill Book Company, Inc. N.Y. N.Y. copyright 1950, page 1,373

Primary Examiner—Dennis E. Talbert, Jr.

Attorney—Jefferson Ehrlich, Tennes I. Erstad and Robert G. Crooks

[57] **ABSTRACT**

Covers an electrostatic precipitator and mechanism associated therewith for collecting dust, dirt and other particulate matter received by the electrostatic precipitator. The electrostatic precipitator may include two or more apertured plates or grids which are vertically oriented and positioned parallel to each other and arranged so that air or gas laden with the particulate matter will traverse the apertures. The alternate grids may be connected to one terminal of a high voltage source while the other or adjacent alternate grids may be connected to the other terminal of the same source of voltage and grounded. The last grid, i.e., the downstream grid of the series, may be equipped with a tray for receiving the collected dust. The collected dust will reach the tray only after it has been deposited on the grid to which the tray is attached. The collected dust is dislodged from the grid under the influence of the stroke or strokes of a rapper. The tray preferably may be inclined at a predetermined angle so that dust received in the tray may be caused to move downhill along the tray and then discharged into a hopper. A vibrator may be employed to produce repeated blows against the surface of the tray to assist in the removal of the particulate matter.

6 Claims, 4 Drawing Figures

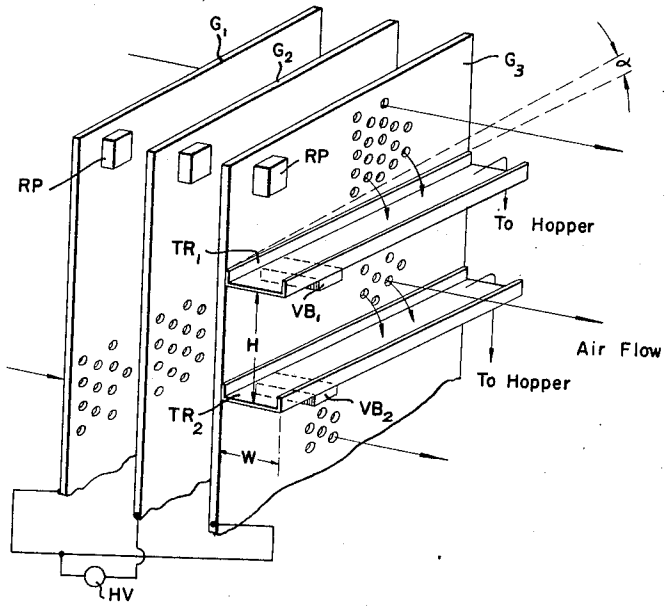

FIG. 1

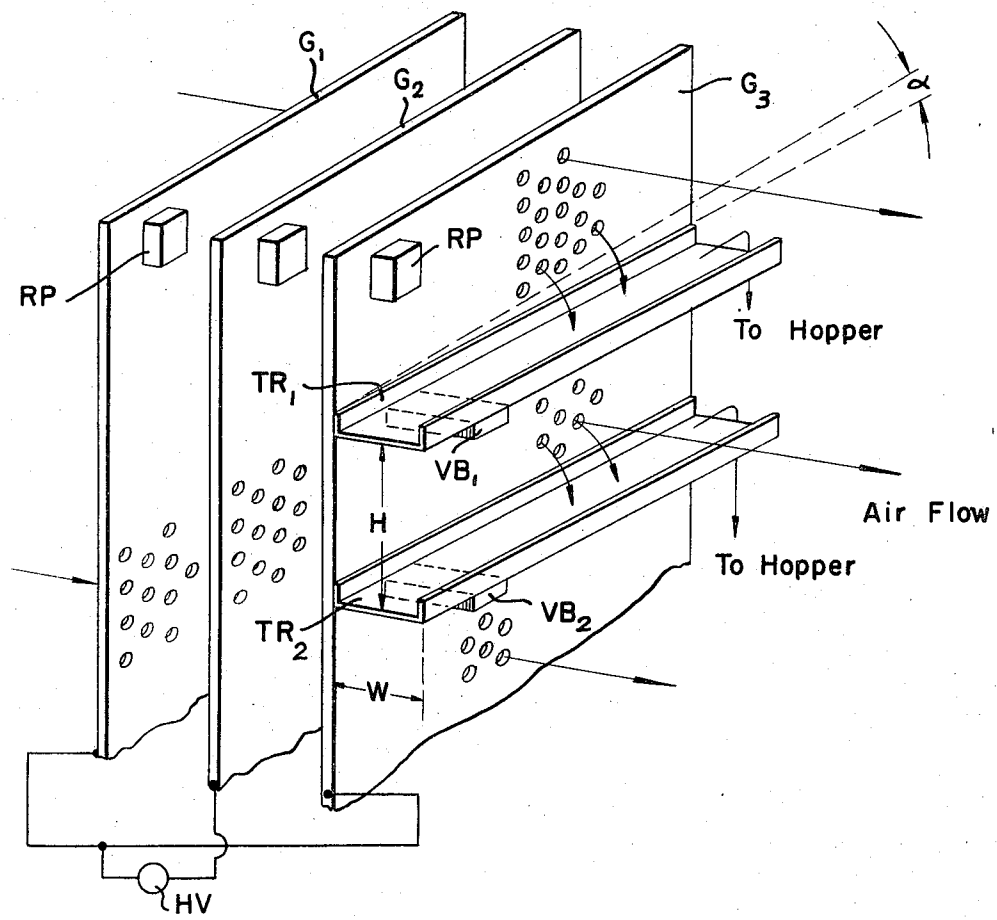

FIG. 2

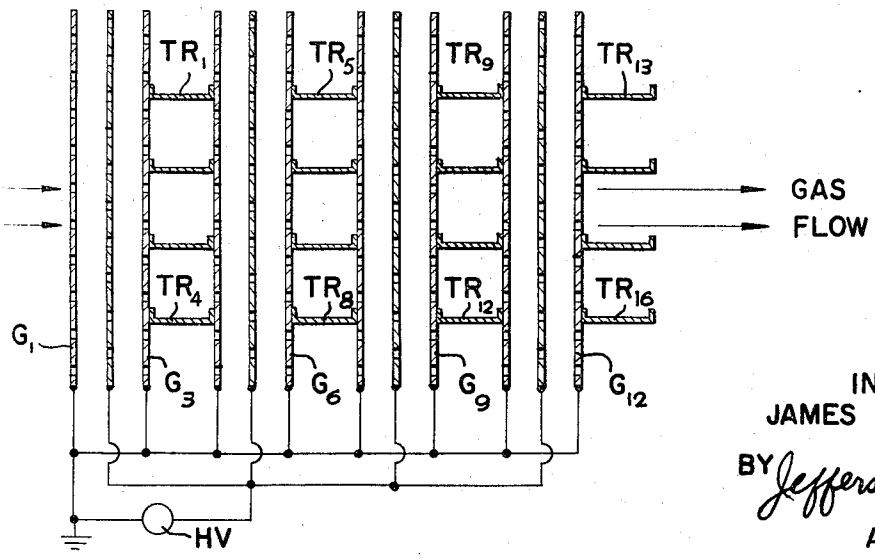

INVENTOR:
JAMES H. VINCENT
BY Jefferson Ehrlich
ATTORNEY

FIG. 3

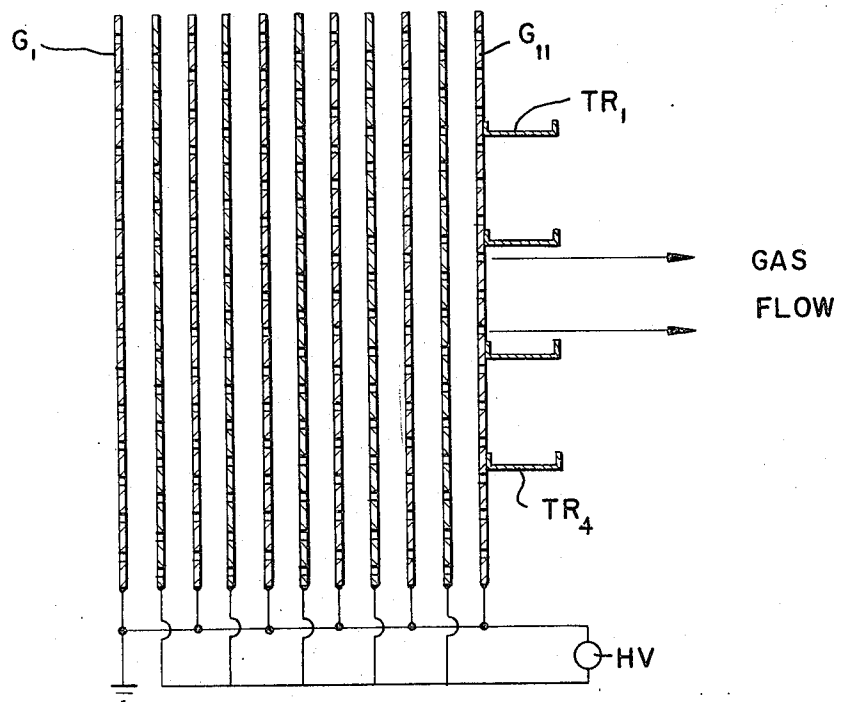

FIG. 4

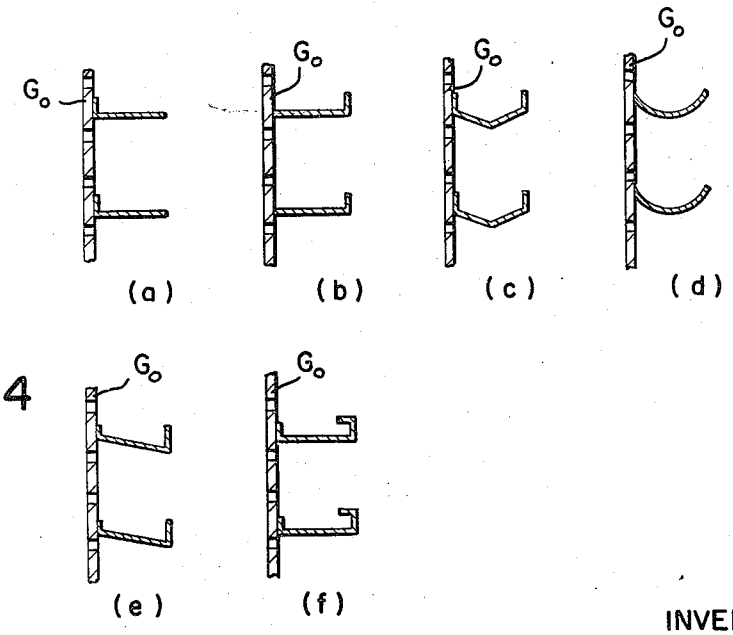

INVENTOR:
JAMES H. VINCENT
BY Jefferson Ehrlich
ATTORNEY

COLLECTING APPARATUS FOR ELECTROSTATIC PRECIPITATORS

This invention relates to electrostatic precipitators and, more especially, to electrostatic precipitators of the so-called multi-grid type.

In my earlier applications Ser. No. 804,050, filed Feb. 25, 1969, and Ser. No. 869,195, filed Oct. 24, 1969, there are shown and described various forms of electrostatic precipitators which involve one or more grid sections for eliminating dust or dirt or other particulate matter moved under the influence of air or gas under pressure along a path which is substantially perpendicular to the vertical, substantially parallel perforated grid electrodes. In the multi-grid structure shown and described in the above applications, a source of high voltage, for example, 20 Kv, is applied to the structure, one terminal of the source being connected, for example, to the first, third, fifth, and other alternate electrodes and grounded, while the other terminal of the source is connected to the second, fourth, sixth and all other alternate electrodes. The present application embodies and describes mechanism in the form of collecting trays and associated mechanism for the collection and distribution of the dust, dirt and other particles deposited on the grids of the electrostatic precipitator.

In accordance with the present invention, dust, dirt and other particulate matter deposited upon one or more of the grid elements of a multi-grid structure may be collected on the final grid element and then dislodged from that grid element for disposition and removal to a remote point. This is done for the purpose of removing the dust, dirt or other particulate matter for the cleansing of the air or gas transmitted through the apertures of the several grid elements.

One of the key elements of the present invention involves a tray or a series of trays. Each tray may be affixed to a grid element so that particles which may be collected on the grid element may be loosened from the grid element and dislodged and allowed to move toward the tray under the influence of gravity. The tray may be substantially horizontal so that the base of the tray will form a balcony and be essentially perpendicular to the surface of the grid electrode to which it is attached. Preferably, however, the surface of the tray may be inclined at a small predetermined angle so that particulate matter reaching the surface of the tray will be allowed to move, and influenced to move, in one direction, always the same direction, such as, to the right, in the removal of the particles after collection by the tray.

To facilitate the collection of the particles in the tray, some form of rapper of any well-known type may be associated with one or all of the grid electrodes from which the collected particles are to be dislodged. The rapper may be provided for the purpose of striking the grid electrodes with the hammer-like blows at repeated, intermittent intervals during the dislodgement operation. Upon dislodgement under the influence of the rapper, the particles will fall, essentially vertically due to their weight, and reach the collecting surface of the underlying tray.

In addition, it may be desirable, and usually necessary, to remove the particles from the collecting tray. In order to expedite the removal of such particles from the tray, the tray may be inclined at a small predetermined angle, as already suggested, and, in addition, a vibrator may be associated with the horizontally positioned tray so as to produce substantially continuous vibrations in the form of hammer-like blows against the face of the tray so that the collected particles will be urged and impelled to move in a unidirectional path along the tray surface to a common exit port where they will be deposited and finally removed.

This invention will be better and more clearly understood from the following more complete description and explanation when considered in connection with the accompanying drawing in which FIG. 1 schematically illustrates three of a multiplicity of apertured grid electrodes equipped with one or more trays and other equipments provided for dislodging particles of matter deposited on the grid electrodes;

FIG. 2 schematically shows another form of arrangement in which groups of trays are interposed between adjacent sets of grid electrodes;

FIG. 3 shows another schematic arrangement comprising a plurality of grid electrodes arranged so that the last of the grid electrodes is equipped with collecting trays; and

FIG. 4 schematically illustrates different contours of tray structures which may be used in the practice of this invention.

Referring to the drawing, and especially to FIG. 1, three illustrative grid electrodes G1, G2 and G3 are arranged as three substantially vertical parallel elements each of which may include a multiplicity of apertures or other openings of the kinds and types shown in our drawing or as disclosed in the prior applications above-noted. The outer grids G1 and G3 are connected to one pole, for example, the positive pole, of a source of high voltage and grounded, while the intermediate grid G2 may be connected to the other pole of the same source of voltage. If the source of voltage is a direct voltage, grids G1 and G3 may be together connected to the same positive pole of the source and grounded, while grid G2 may be connected to the negative terminal of the source. On the other hand, if an alternating source of voltage is employed, grids G1 and G3 may be connected together to one terminal of the source and grounded, while the other grid G2 is connected to the other terminal of the source. If desired, the polarities may be reversed. The manner of operation and the other functions of such equipments are disclosed in the above-specified earlier applications to which reference may be made.

A stream of gas or other fluid with the accompanying entrained dust, dirt or other particulate matter, which may be obtained from any source of dust, dirt or particulate matter, such as a gas engine or a smoke stack, is impelled by a fan or other blower so that the entrained particulate matter will be pressurized and caused to travel at a good or predetermined velocity in a path which is substantially perpendicular to the surfaces of the various apertured grid electrodes. The manner in which the particulate matter may be collected on the surfaces of any of the several grids due to the attractive electrical forces and the aerodynamic eddy or curvilinear paths developed between the grids is rather fully described in the above-noted applications and need not be repeated before.

FIG. 1 schematically shows two trays TR1 and TR2 which may be substantially parallel to each other and essentially substantially perpendicular to the third or last grid G3 to which the two trays may be attached in any well known manner. The two trays TR1 and TR2 may be parallel to the ground, or they may preferably be inclined at a small angle with respect to the ground as, for example, some 10°. The angle of inclination will serve to channel and urge the collected particles alighting on the trays so that the particulate matter will move downwardly along the incline, i.e., from left to right, as shown in FIG. 1, to be dropped into a hopper.

To materially aid in the removal of the particulate matter which may be collected upon the grids G1, G2 and G3 shown in FIG. 1, a rapper, or a plurality of rappers, of any well known type, may be employed. One rapper for each grid may be sufficient in many cases. A suitably insulated rapper may be associated with, and be common to all of the several grids. The rapper may be positioned at or near the top of the grid electrode, as shown. It may include, for example, an electromechanical structure embodying a coil of wire and an armature arranged so that, as current, such as the conventional 60 cycle current, may be applied to the winding of the coil, the armature will be vibrated by the applied AC current. The armature of such a rapper may be caused to vibrate perhaps at the frequency of the AC current, or at a harmonic or sub-harmonic frequency, and produce hammer-like blows against the upper end of the grid electrode or electrodes. If the hammer-like blows are sufficiently large and effective, the particulate matter previously deposited on the grid electrodes may be dislodged. Dislodged particles may travel through the apertures of the grids and finally move downwardly, under the influence of gravity, to alight on the face or base of a receiving

tray. The tray TR1 will collect particulate matter received from that portion of grids G1,G2 and G3 which are located above the tray TR1. The lower tray TR2 will similarly receive particulate matter dislodged from that lower part of those grids which are positioned between the trays TR1 and TR2, and so on for other trays that may be located on other lower positions on the grid G3.

Each tray, such as TR1 or TR2, may also be equipped with a so-called vibrator, or series of vibrators, of any well known type. Such a vibrator may also embody, for example, a coil of wire and a mechanical element controlled by the flow of current through the coil, so that the mechanical element will be moved in synchronism with the frequency of the applied AC current. The vibrator VB1, when activated by an appropriate current, such as conventional 60 cycle current, will produce repeated hammer-like blows against the face or base of the vibrator VB1 so as to facilitate the movement of particulate matter that has alighted on, and been collected by the tray TR1. Likewise, the similar vibrator VB2 will produce like vibrations or blows impelled against the face or base of the vibrator VB2 to facilitate the movement of particulate matter along the face or base of the vibrator VB2. In both cases, however, the particulate matter will be moved in the same direction, that is, to the right, so that the particulate matter may be released from the receiving trays TR1 and TR2 and fall, under the influence of gravity, into a common hopper (not shown) at the bottom of the grid G3.

FIG. 2 schematically illustrates 12 grids G1 to G12 arranged as four separate groups of three grids each. FIG. 2 shows the space between the grids G3 and G4 of the first and second sections of the network supplied with four trays TR1 and TR4. Similar sets of trays are positioned, as shown, between the second and third sections of the network, and between the third and fourth sections, and another and final set of trays TR13 to TR16 is positioned on the downstream side of the last section of grids. As already indicated, the gaseous medium bearing the particulate matter is driven under pressure in a path extending perpendicularly through the apertures of the parallel grid elements G1 to G12. As shown in drawing, a common source of relatively high voltage HV is connected to the grids in such a way that the first and third grids of each of the four sections are joined together and connected to one terminal of the source of voltage HV and grounded, while each of the intermediate grids of the several sections are joined together and connected to the other terminal of the voltage source HV. The trays TR1 to TR4, for example, will be equipped with vibrators, such as those shown in FIG. 1, which are positioned on the downstream grid of each section. Each grid or each group of grids may also be equipped with a rapper of the kind shown and described with reference to FIG. 1.

FIG. 3 illustrates another schematic arrangement embodying 11 tandemly arranged grids G1 to G11. The downstream grid G11 is shown equipped with a series of trays TR1 to TR4 serving as common collecting means for collecting the particulate matter released by the several grid elements G1 to G11. The grid elements may also be supplied with one or more rappers of the kind described in connection with FIG. 1.

FIG. 4 shows several forms of common grid elements, each provided with a group of two trays which have different cross-sectional shapes as shown. The cross-sectional tray shapes for each grid element will be uniform through the structure. However, the tray structure may also be inclined at a small predetermined angle to improve the disposition of particulate matter to be released into a hopper (not shown). It will be apparent that each grid of FIG. 4 may have an associated rapper and that each tray may have an associated vibrator.

In the practice of this invention, particulate matter may be collected on the grids until it reaches a substantial thickness, the thickness depending upon a number of factors such as the constituency of the particulate matter to be deposited on the grids, the gaseous flow rate, the chemical composition of the surface of the grid structure, etc. Such particulate matter, when first dislodged by a grid, leaves the grid surface in the form of relatively large agglomerates which fall, predominantly under the influence of gravity, to the underlying receiving tray. However, the gaseous flow will subject the dislodged material to shear forces which may break up the agglomerated matter into smaller and smaller agglomerates. If the particles are reduced sufficiently in size, they will become so small that they may become again entrained in the gaseous stream as if they had never been deposited on any of the grids. It is, therefore, a feature of this invention to provide sufficiently active rappers and vibrators so that particulate matter released by the several grids will be rather freely and quickly moved toward the receiving trays and then along the surface of the trays to the hopper.

It has been shown that, for effective transfer of agglomerated collected material from the grid collecting surfaces and into the collecting trays, the vertical distance between successive trays preferably should not exceed the width of each tray as measured along the direction of gas flow. However, these proportions may be varied as may be desired. Typically the tray width in the direction of gas flow might be 12 inches and the vertical separation between adjacent trays also 12 inches.

According to the present invention, particulate matter is moved through the apertured grids so that the particulate matter may be deposited on at least one of the grids and then collected by one of the trays and finally released to a hopper.

While this invention has been shown and described in certain particular arrangements merely for illustration and explanation, it will be readily apparent that the various components as well as the overall system may be employed in various forms without departing from the spirit and scope of this invention.

What is claimed is:

1. Electrostatic precipitator apparatus comprising a substantially vertical element having a plurality of perforations through which are transmitted substantially horizontally a gaseous medium bearing particulate matter and such particulate matter may be electro-deposited on said element, the perforations being of such a size as to freely pass the particulate matter without becoming clogged thereby, a tray affixed to the downstream side of said element in a horizontal or nearly horizontal position and extending over substantially the entire width of said element so that it may receive particulate matter electro-deposited on said vertical element and thereafter released from said vertical element above the position of the tray, and a rapper positioned higher than the tray for periodically mechanically rapping the vertical element to release particulate matter from the vertical element.

2. Electrostatic precipitator apparatus according to claim 1, in which the tray is affixed to the vertical element at a small predetermined angle, such as about 10°, with respect to the ground.

3. Electrostatic precipitator apparatus according to claim 1, in which the rapper consists of a vibrator adjacent to the tray for applying mechanical vibrations to the tray.

4. Electrostatic precipitator apparatus comprising a plurality of substantially vertical plate elements which are substantially parallel to each other and electrified so that adjacent elements are oppositely polarized, each of said vertical elements having a plurality of openings through which a gaseous medium bearing particulate matter may be transmitted substantially unidirectionally and substantially horizontally through the openings of said vertical elements and, due to the electric fields between the vertical elements, such particulate matter may be deposited on said vertical elements, the openings being of such size as to freely pass the particulate matter without becoming clogged thereby, a stationary tray positioned downstream of said vertical elements and substantially horizontal, so that the tray may receive particulate matter released from said elements, and means for vibrating said tray so as to facilitate the movement along the tray of the particulate matter received by the tray.

5. Electrostatic precipitator apparatus according to claim 4, including means for vibrating said vertical plate elements so as to release particulate matter therefrom.

6. Electrostatic precipitator apparatus for removing particulate matter borne by a pressurized gaseous medium moving substantially unidirectionally, comprising a plurality of substantially vertical perforated plates which are substantially parallel to each other and substantially perpendicular to the path of the gaseous medium, said plates being polarized so that such particulate matter traversing the perforations of said

plates may be attracted to and collected on said plates, elongated receptacle means in the form of trays affixed to said plates and positioned downstream of said plates and substantially parallel or nearly parallel to the ground for receiving particulate matter released by said plates, and rapping means for mechanically rapping each selected perforated plate, and vibrating means for mechanically vibrating each tray for facilitating the movement of particulate matter received by each tray.

* * * * *