(No Model.) 3 Sheets—Sheet 1.

# J. W. KIRBY.

## AUTOMATIC BOOT POLISHER, PERFUMER, MIRROR, AND GUM MACHINE.

No. 590,067. Patented Sept. 14, 1897.

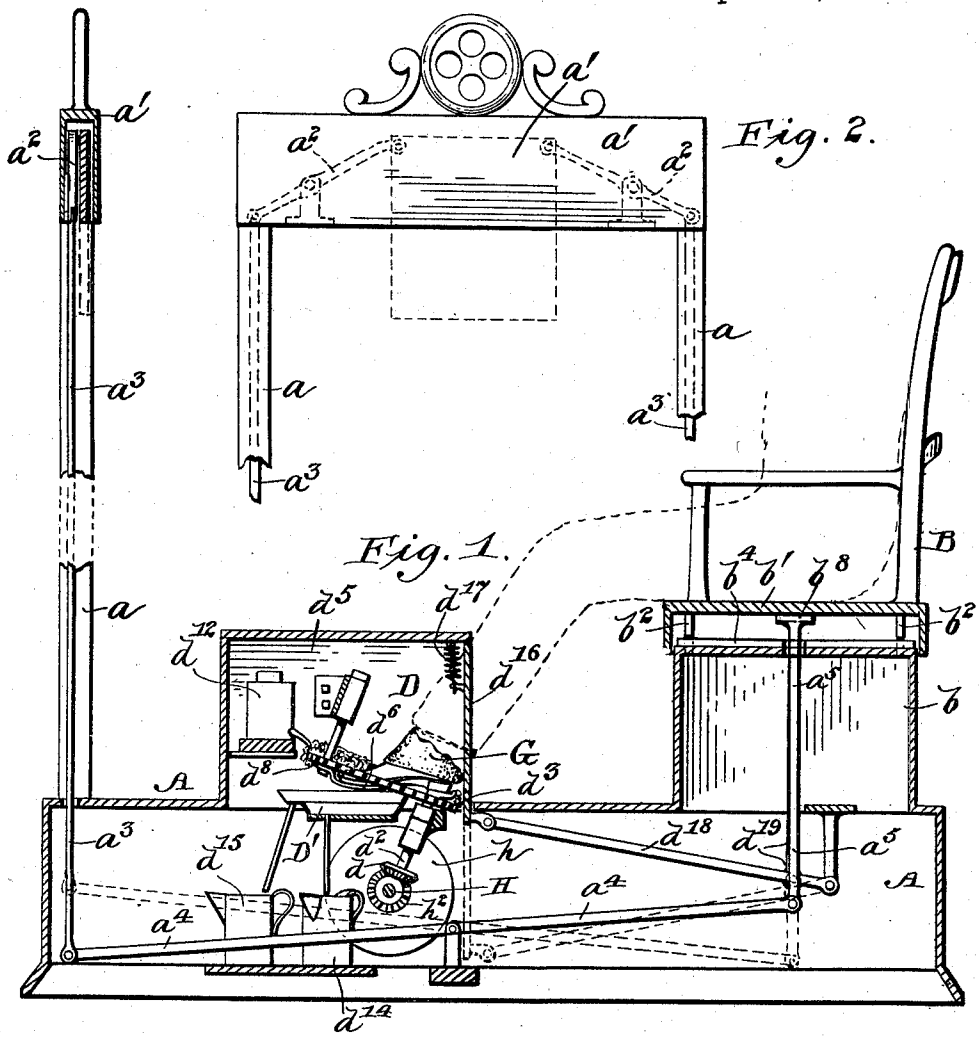


Fig. 2.

Fig. 1.

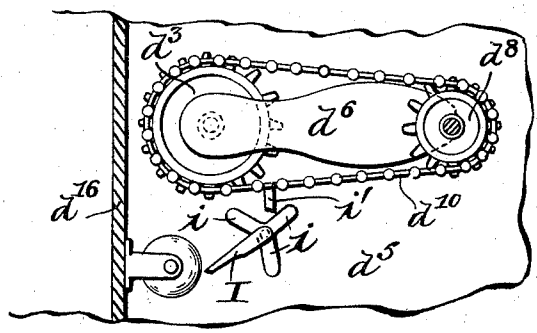


Fig. 3.

Witnesses
Severance.
Roger M. Temwick.

Inventor
John W. Kirby
by Mason Fenwick & Lawrence
their Attorneys

THE NORRIS PETERS CO., PHOTO-LITHO., WASHINGTON, D. C.

(No Model.) 3 Sheets—Sheet 2.

# J. W. KIRBY.

## AUTOMATIC BOOT POLISHER, PERFUMER, MIRROR, AND GUM MACHINE.

No. 590,067. Patented Sept. 14, 1897.

Fig. 4.

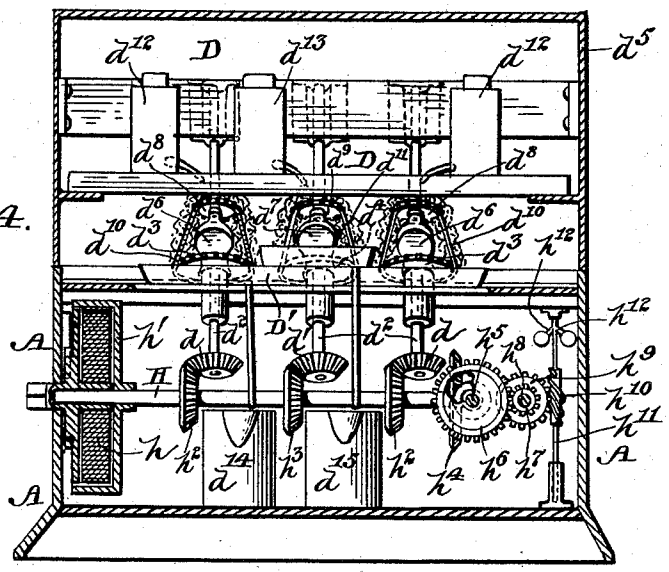

Fig. 5.

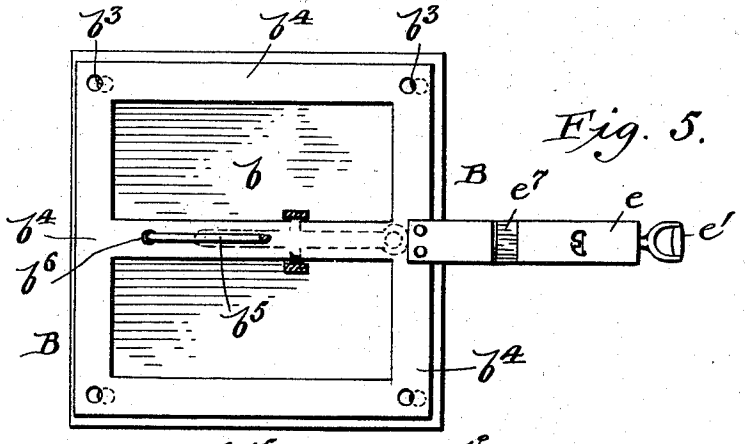

Fig. 6.

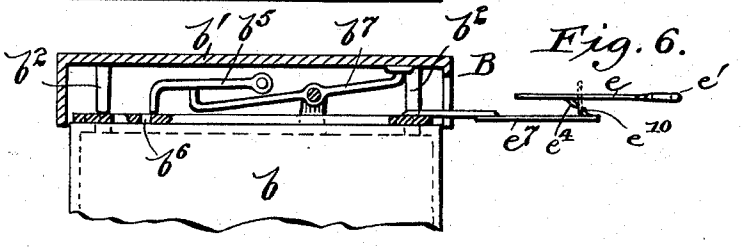

WITNESSES

Geverance.

Roger A. Fennwick

INVENTOR

John W. Kirby

by his Atty

Mason Fennwick & Lawrence

THE NORRIS PETERS CO., PHOTO-LITHO., WASHINGTON, D. C.

(No Model.) 3 Sheets—Sheet 3.

J. W. KIRBY.

AUTOMATIC BOOT POLISHER, PERFUMER, MIRROR, AND GUM MACHINE.

No. 590,067. Patented Sept. 14, 1897.

Fig. 7.

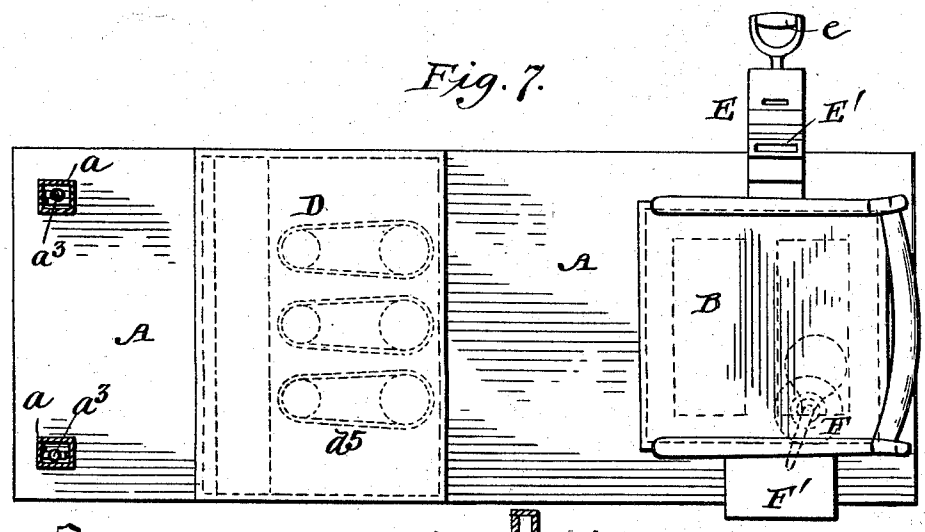


Fig. 8.

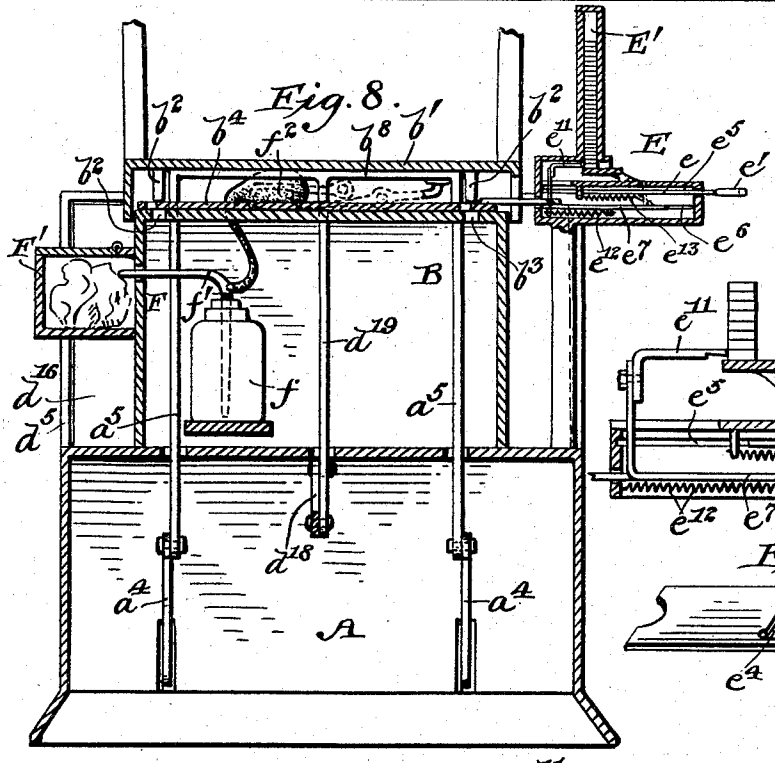


Fig. 9.

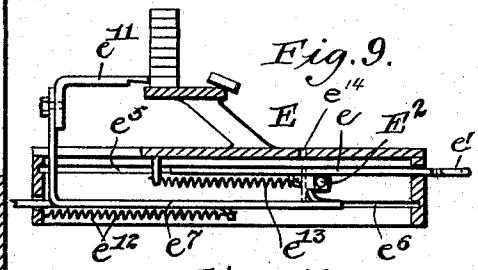


Fig. 10.

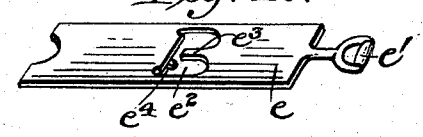


Fig. 11.

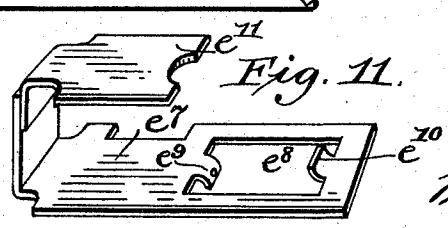


WITNESSES

C. Severance.

Roger Fenwick

INVENTOR

John W. Kirby

by his Attys

Mason Fenwick & Lawrence

THE NORRIS PETERS CO., PHOTO-LITHO., WASHINGTON, D. C.

# UNITED STATES PATENT OFFICE.

JOHN W. KIRBY, OF SCRANTON, PENNSYLVANIA.

## AUTOMATIC BOOT-POLISHER, PERFUMER, MIRROR, AND GUM-MACHINE.

SPECIFICATION forming part of Letters Patent No. 590,067, dated September 14, 1897.

Application filed January 29, 1897. Serial No. 621,157. (No model.)

*To all whom it may concern:*

Be it known that I, JOHN W. KIRBY, a citizen of the United States, residing at Scranton, in the county of Lackawanna and State of Pennsylvania, have invented certain new and useful Improvements in a Combined Boot-Polisher, Handkerchief-Perfumer, Looking-Glass, and Gum-Machine; and I do hereby declare the following to be a full, clear, and exact description of the invention, such as will enable others skilled in the art to which it appertains to make and use the same.

My invention relates to improvements in coin-controlled machines, and more particularly such as are adapted to deliver gum, perfume handkerchiefs, polish shoes, and present a mirror before a person upon dropping a coin in the machine.

It consists in certain novel constructions, combinations, and arrangements of parts, as will be hereinafter fully described and claimed.

In the accompanying drawings, forming a part of this specification, Figure 1 represents a longitudinal vertical section through my improved device. Fig. 2 represents a detail front elevation of the mirror-inclosing frame. Fig. 3 represents a detail plan view, partially in section, showing the means for tripping the alarm mechanism. Fig. 4 represents a vertical transverse sectional view through the boot cleaning and blacking mechanism. Fig. 5 represents a top plan view of the chair-base, showing the controlling-plate upon the same. Fig. 6 represents a detail sectional view of the chair-seat, showing the locking mechanism within the same. Fig. 7 represents a top plan view of the whole device, the standards supporting the mirror being shown in section. Fig. 8 is a transverse vertical section through the chair-seat and the base of the device and also through the gum-delivering mechanism. Fig. 9 is an enlarged sectional view through the gum-delivering mechanism. Fig. 10 is a perspective view of the hand-operated slide of the gum mechanism. Fig. 11 is a detail perspective view of one of the slides used in the gum mechanism.

A in the drawings is the base of a machine constructed in accordance with my invention. B is the chair mounted thereon; D, the cleaning and polishing mechanism.

E is a gum-delivering device, and F is a handkerchief-perfuming device.

In the forward end of the base A a transverse shaft H is mounted, carrying at one end a coil actuating-spring, as $h$. A drum or casing $h'$ surrounds the coil-spring, and suitable ratchet mechanism is interposed between the spring and the said casing whereby the spring may be wound up when desired. The shaft H carries bevel-gears $h^2$ $h^3$, which mesh with corresponding bevel-gears $d$ $d'$, which are keyed or otherwise secured to the lower end of upwardly-extending inclined shafts $d^2$ $d^2$. The upper ends of these shafts carry sprocket-wheels $d^3$ $d^4$, mounted in the casing of the polishing mechanism D. In order to regulate the speed of the shaft H, gearing is provided to connect the same with a governor. On the shaft H is mounted a bevel-gear $h^4$, which meshes with a bevel-pinion upon the shaft $h^5$, mounted in the base A at right angles to the shaft H. This shaft $h^5$ also carries a gear-wheel $h^6$, meshing with a pinion $h^7$ upon another shaft $h^8$, parallel to the said shaft $h^5$. The shaft $h^8$ also carries a large gear-wheel $h^9$, which engages a worm $h^{10}$ upon an upright shaft $h^{11}$, mounted in the frame A. The upper end of the shaft $h^{11}$ carries a pair of weighted arms $h^{12}$ $h^{12}$, which act as a regulating means to the speed of the mechanism described.

The polishing mechanism D is inclosed by a casing $d^5$, mounted on the top of the base A. Within the casing $d^5$ are arranged foot-rests, as $d^6$ $d^7$. The heel portions of the foot-rests receive the upper ends of the inclined shaft $d^2$, forming the upper bearing for the same. The toe portions of the foot-rests extend beneath the sprocket-wheels $d^8$ $d^9$, which are connected with the sprocket-wheels $d^3$ $d^4$ and operated by sprocket-chains $d^{10}$ $d^{11}$. The sprocket-chains $d^{10}$ $d^{11}$ carry sponges so closely arranged as to form almost a continuous cleaning or polishing means. In order to supply the sponges of the sprocket-chains with suitable cleaning and polishing liquids, I mount cans or tanks $d^{12}$ $d^{13}$ upon a suitable shelf in the casing $d^5$ above the sprocket-chains, the said tanks having spouts extending in proximity to the chains constructed in any well-known manner, so as to allow the cleaning or polishing liquids to drip constantly upon the sponges on the chains. As there is liable to be a great deal of dripping from said chains I provide a collecting-pan beneath them, as D', which catches all of the drippings and by

means of a tube leading therefrom conveys the same to a suitable vessel $d^{14}$. When considerable liquid has been collected in the vessel $d^{14}$, it may be poured into the supply-tanks above again.

The central mechanism, consisting of a sprocket-chain $d^{11}$ and means for actuating the same and the tank $d^{13}$, is intended for the cleaning mechanism, and a suitable material therefor is put into said tank. A separate collecting pan or tray is preferably located beneath the same for collecting the drippings therefrom, which are led into a vessel $d^{15}$ and may be returned therefrom to the tank $d^{13}$. The outer chains $d^{10}$ $d^{10}$ and tanks $d^{12}$ are preferably used for polishing shoes and are provided with suitable polishing fluid.

When it is desired to clean and polish shoes, one foot is placed on the cleaning mechanism, the toe being projected through the chain $d^{11}$, the foot resting upon the foot-rest $d^{7}$, and as the chain revolves the shoe will be thoroughly cleaned by the sponges carried thereby.

While I contemplate using any desired cleansing composition, yet I prefer to use one composed of sweet-oil and steel-drops, which I find is very effective for cleansing purposes. I also prefer to use a polishing liquid for the shoes consisting of a composition of benzoin, lampblack, soot, and steel-drops. After the other shoe has been cleaned in a similar manner the feet are placed upon the foot-rests $d^{6}$ $d^{6}$ of the polishing device and the polish is spread upon the shoes by the chains $d^{10}$ $d^{10}$ in the same manner that the cleansing fluid was applied previously.

In order to prevent any of the cleansing or polishing liquids from getting upon the trousers of the person having the shoes operated upon, I prefer to use a rubber band G, as shown in Fig. 1 of the drawings, which is slipped on over the shoe and not only protects the pants, but prevents the polish from extending up too high upon the shoe.

The sprocket-chains $d^{10}$ $d^{10}$ are kept continually running, so that they are always ready for use, it being merely necessary to wind up the spring $h$ occasionally before it is quite run down.

On the rear end of the base A is mounted a chair or seat B. The base of this chair is preferably an inclosing casing $b$ to conceal the working parts located beneath the said chair. The seat proper, $b'$, of the said chair is exterior to the said casing $b$ and is provided with legs or standards $b^2$ $b^2$, which are located directly above apertures in the top of the casing $b$, so that when the seat is depressed the legs will extend into the openings $b^3$. In order to prevent the legs entering said openings $b^3$ $b^3$ and normally hold the seat in its elevated position, a frame or plate, as $b^4$, is interposed between the seat $b'$ and top of the casing $b$. The frame or plate $b^4$ is also provided with apertures corresponding with the apertures $b^3$, so that when the plate is in such a position as to bring the apertures therein in coincidence with the apertures $b^3$ $b^3$ the legs $b^2$ $b^2$ of the chair-seat can descend in these openings. The plate $b^4$ is normally held in such a position that its apertures do not coincide with the apertures $b^3$ $b^3$, so that the chair-seat cannot descend. The plate $b^4$ is connected with a slide $e^7$, mounted in the gum-delivering device E. The slide $e^7$ is adapted to be reciprocated, as will be hereinafter described, by a slide $e$, which extends through the base of the gum-delivering machine and has an operating-handle $e'$ secured thereto externally of the housing of the gum-delivering mechanism. The slide $e$ is provided with an aperture $e^8$, and a coin-engaging tongue $e^8$ extends into the same. The slide is also provided with a depending arm $e^4$ upon its under side, which assists in holding the coin that may be dropped into the device.

The casing of the gum-delivering device is provided with grooves, as $e^5$ $e^5$, in which the slide is adapted to be reciprocated. Another pair of grooves $e^6$ $e^6$ below the grooves $e^5$ receive and guide the slide $e^7$. The slide $e^7$ is provided with an aperture $e^8$ and a depending lug $e^9$, extending into said aperture, and an upwardly-extending lug $e^{10}$, also extending in said aperture. One end of the slide $e^7$ is bent upwardly and carries at its upper end a pusher or ejector $e^{11}$, adapted to push out a block of gum from beneath a column of the same carried in the casing above the said slide, the said block of gum being delivered exteriorly of the said casing. A spring $e^{12}$ beneath the slide $e^7$ engages the lug $e^9$ at one end and is fixed to the casing of the device at the other end and operates to retract the slide $e^7$ after it has been pulled out. A spring $e^{13}$ is also mounted in the casing and attached thereto at one end and to a projection upon the slide $e$ at the other apertures to draw the slide back into the casing.

A casing or box E' is mounted above the mechanism just described and is adapted to hold vertically-arranged columns of block gum. The top of the box is provided with a lid and locked, so that it cannot be tampered with by unauthorized parties, but facilitates the reloading of the box with gum.

Between the seat of the chair $b'$ and the plate $b^4$ is arranged a locking device carried by the under side of the said seat. It consists of a lever $b^5$, having a depending end adapted to drop into an opening $b^6$ in the plate $b^4$ when the same is pulled outwardly by the plate $e^7$ when actuated by the slide $e$ and handle $e'$, so as to lock the said plate $b^4$ with its corner-apertures coinciding with the apertures $b^3$ $b^3$. It will thus be seen that the chair-seat will be in position to descend upon receiving the weight of a person who may sit upon it. A lever $b^7$ is also pivotally mounted beneath the seat $b'$, one end of the lever being engaged by the said seat and the other end engaging the lever $b^5$, so that upon depressing the seat the lever $b^7$ will be caused to raise the lever $b^5$ out of the aperture $b^6$ and

release the plate $b^4$, the spring $e^{12}$ above described operating to return the said plate $b^4$ and slide $e^7$ to their normal positions. The casing E is provided with an aperture, as $e^{14}$, to receive the coins required to operate the machine.

It will be apparent from the drawings and description that pulling out the slide $e$ by the handle $e'$ without depositing a coin in the device will produce no effect upon the mechanism, but upon putting a coin in the device it will drop down between the projections $e^3$ and $e^4$ of the slide $e$ and engage the projection $e^{10}$ of the slide $e^7$, so that upon pulling forth the slide $e$ the slide $e^7$ will also be pulled forward and a block of gum be knocked out of its column and delivered and the plate $b^4$ will be pulled forward and locked by the lever $b^5$, so that the chair-seat will be left free to descend when a person sits upon it. A projection $E^2$ upon the inner side of the casing is adapted to knock the coin out of its position between the lugs $e^3$ and $e^4$ into the money-drawer. The descent of the chair-seat after it has been unlocked is productive of other results for which the machine is adapted.

The shoe-polishing mechanism, as above shown, is inclosed in a casing $d^5$ and the front of this casing is provided with a sliding door $d^{16}$, which is normally held closed by the springs $d^{17}$ $d^{17}$. The door $d^{16}$ is connected to a lever $d^{18}$, pivotally mounted in the casing A. A bar $d^{19}$ is pivoted to the lever $d^{18}$ between its fulcrum-point and the door. The upper end of the said bar $d^{19}$ extends upwardly and is attached to a bar $b^8$, secured to the under side of the seat $b'$ of the chair B. It will thus be seen that upon depressing the seat $b'$ the lever $d^8$ will be forced downwardly, carrying the door $d^{16}$ with it and opening the front of the casing $d^5$, so that the feet may be extended into the same and the shoes cleaned and polished, as above described.

Upon the end of the casing A opposite to the chair B are vertical standards $a$ $a$, connected at their upper ends by a cross-frame $a'$. Pivoted in the frame $a'$ are levers $a^2$ $a^2$.

To the inner ends of the levers $a^2$ $a^2$ is secured a mirror, the outer ends of the said levers being pivotally attached to vertical rods $a^3$ $a^3$, extending downwardly and into the base A, where they are pivotally secured to the forward ends of levers $a^4$ $a^4$. The levers $a^4$ $a^4$ are fulcrumed about centrally of their length and extend to a point below the chair B. Depending rods $a^5$ $a^5$, connected to the bar $b^8$ upon the chair-seat $b'$, connect the same with the rear ends of the levers $b^4$ $b^4$. It will thus be apparent that upon depressing the chair-seat not only will the door $b^{16}$ of the polishing device be opened, but the levers $a^4$ and rods $a^3$ $a^3$ will be actuated and the levers $a^2$ will lower the mirror before the face of the person sitting in the chair B.

To one side of the chair is a box F', forming part of the perfuming device F. In the base $b$ of the chair B is situated a perfume-bottle, as $f$, provided with an atomizer $f'$ of usual form, the bulb $f^2$ thereof being placed between the seat $b'$ of the chair B and the plate $b^4$, so that when the chair-seat descends perfumery will be ejected from the receptacle $f$ into the box F' to perfume a handkerchief or like article which may be deposited in the said box.

In order to indicate when the shoes have been properly polished, I provide an alarm consisting of a bell secured to the slide or door $d^{16}$. A striker I is mounted in the casing $d^5$ in proximity to one of the chains $d^{10}$, the said striker being free to rotate and being provided with lugs $i$ $i$, which extend into the path of a projection $i'$, secured to said sprocket-chain $d^{10}$. It will be seen that upon the continued movement of the chain $d^{10}$ the projection $i'$ will strike the projections $i$ $i$ and cause the striker to be revolved until it strikes the bell upon the slide $d^{16}$, which has been brought in close proximity thereto by the lowering of the said door $d^{16}$. The bell will thus serve as an indicator of the fact that the shoes have been sufficiently polished.

It will be seen that the above-described machine is so constructed that the different functions adapted to be performed thereby can only be secured in a proper manner, for the different mechanisms are all properly inclosed and dependent in their operation upon the depositing of the proper coin in the gum-machine.

The operation of the devices is as follows: A person desiring to use the machine places the proper coin in the slot $e^{14}$. Then taking hold of the handle $e'$ he pulls the same outward. This operates to draw a block of gum and to set and lock the plate $b^4$ beneath the chair-seat, so that the said chair-seat is in position to act upon the mechanism beneath it. The person then steps upon the base A and places his handkerchief in the box F' and the rubber bands G upon his shoes and seats himself in the chair. His weight operating upon the chair-seat immediately causes the perfume to be ejected upon the handkerchief, the door of the shoe-polishing mechanism to be opened, and the mirror to be brought down opposite his face. He first places his feet upon the cleansing mechanism and then upon the polishing-platforms, whereupon the desired polish will be produced upon his shoes. When sufficient time has elapsed for the shoes to be properly polished, the bell or alarm will be sounded and the party will know that his shoes are in the proper condition. Upon rising from the chair the parts return to their normal positions and cannot be disturbed or moved therefrom except by the depositing of another coin.

Having now described my invention, what I claim as new, and desire to secure by Letters Patent, is—

1. In a coin-controlled machine, the combination of a gum-delivering mechanism, a chair connected thereto, means for perfuming

articles, cleaning and polishing shoes and presenting a mirror controlled by the operation of said chair, substantially as described.

2. In a coin-controlled machine the combination with a gum-delivering mechanism, of a chair comprising a base portion and a seat located above the same, a slide interposed between said seat and base portion, means for controlling the descent of the chair-seat connected with the gum-delivering mechanism and a perfuming, shoe-polishing and mirror-exposing devices connected with and actuated by the chair-seat, substantially as described.

3. In a coin-controlled machine, the combination with a gum-delivering device, of a chair comprising a base portion, a seat separate therefrom, depending legs upon said seat adapted to extend into apertures formed in the top of said base portion, a plate or slide interposed between the said base portion and the chair-seat and provided with apertures adapted to coincide with the apertures in the base portion, means connecting the plate with the gum-delivering mechanism whereby the plate is adapted to coincide with or to close the said openings in the base portion for enabling the seat of the chair to descend, substantially as described.

4. In a coin-controlled machine, the combination with a suitable base, of a shoe-polishing mechanism mounted therein consisting of foot-rests, sprocket-chains carrying the polishing means, means for supplying cleansing and polishing liquids to said chains and means for operating the said chains, a door adapted to close the said polishing mechanism, a chair adapted to operate said door and a gum-delivering mechanism adapted to permit the operation of the chair, substantially as described.

5. In a coin-controlled machine, the combination with a suitable base, of a shoe cleaning and polishing mechanism mounted therein consisting of sprocket-chains carrying polish-applying means, sprocket-wheels carrying said chains, gearing for rotating said sprocket-wheels, a mainspring for operating said gearing, a governor and means for supplying cleansing and polishing fluids to said chains, a door adapted to control the use of said polish device, a chair for operating said door and a gum-delivering mechanism for controlling the operation of the said chair, substantially as described.

6. In a coin-controlled machine, the combination with a chair mounted upon a suitable casing consisting of a base portion and a separate seat portion above the same, a vessel adapted to hold perfumery mounted in said base portion, a box or similar article mounted at the side of the chair and means interposed between the said base portion and the seat of the chair for ejecting perfumery from said vessel into the box upon the descent of the chair-seat, means for controlling the descent of the chair-seat and a gum-delivering mechanism operating said controlling means, substantially as described.

7. In a coin-controlled machine, the combination with a suitable frame of a mirror mounted thereon, levers for lowering and raising the said mirror, means connected to said mirror and extending into the base of said frame, a chair connected with said means and a gum-delivering mechanism adapted to control the operation of the chair whereby the mirror is adapted to be raised or lowered as desired, substantially as described.

8. In a coin-controlled apparatus, the combination with a chair mounted upon a suitable frame, means for controlling the descent of the seat of the said chair, a gum-delivering mechanism connected with said means consisting of a casing carrying blocks of gum, a slide for ejecting the same, a spring for returning it to its normal position, another slide extending exteriorly of said casing and provided with an operating-handle and means for causing the latter slide to operate the former upon depositing a coin in the machine, substantially as described.

9. In a coin-controlled apparatus, the combination with a suitable casing, of a cleaning and polishing mechanism consisting of foot-rests, endless chains moving around the same, means for actuating said chains, a door or slide adapted to expose said mechanism to use, an alarm upon said door for indicating when the desired polishing has been performed, means upon one of said chains for operating the said alarm and a chair connected to said door and adapted to open or close the same and a gum-delivering mechanism adapted to control the operation of said chair, substantially as described.

In testimony that I claim the foregoing as my own I hereunto affix my name in the presence of two witnesses.

JOHN W. KIRBY.

In presence of—
E. J. LYNETT,
JOHN E. BRADLEY.